CONTENTS

(PART NAME – LOCATION)

ABSORBER	– BALL	A10
BALL	– BODY	B10
BODY	– BRACKET	C10
BRACKET	– BULB	D10
BULB	– CARPET	E10
CARRIER	– COIL	F10
COLLAR	– COVER	G10
COVER	– DEFLECTOR	H10
DEFLECTOR	– FRAME	I10
FRAME	– GASKET	J10
GASKET	– GROMMET	K10
GROMMET	– HOSE	L10
HOSE	– INSULATOR	M10
INSULATOR	– LEVER	A11
LEVER	– MOULDING	B11
MOULDING	– PANEL	C11
PANEL	– PIPE	D11
PIPE	– PLATE	E11
PLATE	– POWER	F11
PROTECTOR	– RETAINER	G11
RETAINER	– RING	H11
RING	– SCREW	I11
SCREW	– SHADE	J11
SHAFT	– SOLENOID	K11
SPACER	– SPRING	L11
SPRING	– SUPPORT	M11
SWITCH	– UNION	A12
UNION	– WASHER	B12
WASHER	– YOKE	C12

ABSORBER – BALL

PART NAME	LOCATION
ABSORBER ASSY, SHOCK REAR, LH	2-D15
ABSORBER ASSY, SHOCK REAR, RH	2-D15
ABSORBER ASSY, SHOCK, FRONT LH	2-K14
ABSORBER ASSY, SHOCK, FRONT RH	2-K14
ABSORBER, INNER REAR VIEW MIRROR	4-A5
ACTUATOR SET, IDLE UP	4-D6
ACTUATOR SET, IDLE-UP	1-B9
ACTUATOR, IDEL UP	1-E11
ADAPTER SUB-ASSY, TRANSMISSION CASE, REAR	2-M3
ADAPTER, STIFFENER PLATE	2-A4
ADAPTER, TRANSFER	2-G2
ADJUSTER ASSY, RECLINING SEAT BACK, LH	3-C8
ADJUSTER ASSY, RECLINING SEAT BACK, RH	3-C8
ADJUSTER ASSY, SHOE, LH (FOR REAR BRAKE)	2-L13
ADJUSTER ASSY, SHOE, RH (FOR REAR BRAKE)	2-L13
ADVANCER ASSY, VACUUM, DISTRIBUTOR	1-G7
ALTERNATOR ASSY	1-K7
AMPLIFIER ASSY, COOLER STABILIZER	4-H5
ANTENNA ASSY, W/HOLDER	4-L4
ANTI-RATTLE, BACK DOOR, LH	3-D7
ANTI-RATTLE, BACK DOOR, RH	3-D7
APRON SUB-ASSY, FRONT FENDER, LH	3-E2
APRON SUB-ASSY, FRONT FENDER, RH	3-E2
ARM ASSY, REAR WIPER	4-L3
ARM ASSY, WINDSHIELD WIPER	4-J3
ARM SUB-ASSY	1-A10
ARM SUB-ASSY (FOR CONTROL LACK)	1-C10
ARM SUB-ASSY, PITMAN	2-E11
ARM SUB-ASSY, VALVE ROCKER, NO.1	1-J3
ARM SUB-ASSY, VALVE ROCKER, NO.2	1-J3
ARM, FLOATING	1-E10
ARM, GLOVE COMPARTMENT DOOR CHECK	3-I2
ARM, PITMAN	2-B11
ARM, REVERSE SHIFT	2-B3
ARM, SPRING	1-C10
ARM, STEERING KNUCKLE, LH	2-H12
ARM, STEERING KNUCKLE, RH	2-H12
ARM, STOPPER	1-C10
ARM, 5TH SHIFT	2-B3
ARMATURE ASSY, STARTER	1-E8
ARMATURE SUB-ASSY, WINCH	2-E8
ARMREST ASSY, FRONT, LH	3-G8
ARMREST ASSY, FRONT, RH	3-G8
ARMREST ASSY, REAR, LH	3-G8
ARMREST ASSY, REAR, RH	3-G8
BACK ASSY, FRONT SEAT (FOR BENCH TYPE)	3-L7
BACK ASSY, FRONT SEAT, LH (FOR SEPARATE TYPE)	3-M7
BACK ASSY, FRONT SEAT, RH (FOR SEPARATE TYPE)	3-L7
BACK ASSY, REAR SEAT (FOR BENCH TYPE)	3-M7
BAG, TOOL	1-B1
BALANCER ASSY, HOOD, LH	3-C2
BALANCER ASSY, HOOD, RH	3-C2
BALL (FOR FRONT DIFFERENTIAL LOCK CYLINDER)	2-A10
BALL (FOR LOWER VALVE BODY)	2-F5
BALL (FOR POWER PISTON NUT)	2-B11
BALL (FOR REAR DIFFERENTIAL LOCK CYLINDER)	2-B9
BALL (FOR REAR UPPER VALVE BODY)	2-F5
BALL (FOR SHIFT INTER LOCK)	2-D3
BALL (FOR SHIFT LOCK SPRING)	2-B8
BALL (FOR TRANSFER INPUT GEAR STOPPER)	2-J6
BALL, CHECK	2-L3
BALL, GEAR SHIFT FORK LOCK (FOR POWER TAKE-OFF)	2-C6
BALL, PISTON	4-L6
BALL, RELEASE FORK	2-B1

B10

BALL - BEARING

PART NAME	LOCATION
BALL, REVERSE SHIFT RESTRICT	2-C3
BALL, SHAFT DETENT	2-D3
BALL, SHIFT DETENT	2-A7
BALL, SHIFT DETENT, NO.2	2-D3
BALL, SPEED CONTROL	1-A10
BALL, STEEL, NO.1 (FOR DISCHARGE WEIGHT)	1-M8
BALL, STEEL, NO.2 (FOR PUMP PLUNGER)	1-M8
BAND, FUEL TANK	3-A10
BAND, IGNITION COIL, NO.1	1-E7
BAND, ROPE HOOK	3-J3
BAND, TOOL BAG	3-E9
BAR SUB-ASSY, FRONT DOOR WINDOW FRONT, LH	3-K5
BAR SUB-ASSY, FRONT DOOR WINDOW FRONT, RH	3-K5
BAR SUB-ASSY, REAR DOOR WINDOW DIVISION, LH	3-H6
BAR SUB-ASSY, REAR DOOR WINDOW DIVISION, RH	3-H6
BAR, AIR PUMP ADJUSTING NO.1	1-H6
BAR, AIR PUMP ADJUSTING NO.2	1-H6
BAR, FAN BELT ADJUSTING	1-D5
BAR, FAN BELT ADJUSTING, NO.2	1-D5
BAR, ROOF CARRIER, FRONT	3-L4
BAR, ROOF CARRIER, REAR	3-L4
BAR, ROOF CARRIER, SIDE	3-L4
BAR, STABILIZER, FRONT	2-K14
BAR, STABILIZER, REAR	2-D15
BASE, RADIATOR SHUTTER CONTROL WIRE CLAMP	3-E2
BATTERY	4-L1
BEARING (FOR ADJUSTER PLUG)	2-B11
BEARING (FOR ALTERNATOR DRIVE END FRAME)	1-L7
BEARING (FOR ALTERNATOR ROTOR)	1-L7
BEARING (FOR COUNTER 5TH GEAR)	2-M2
BEARING (FOR INJECTION CAMSHAFT)	1-I9
BEARING (FOR INPUT SHAFT FRONT)	2-K2
BEARING (FOR INPUT SHAFT)	2-C1
BEARING (FOR OUTPUT SHAFT CENTER)	2-K2
BEARING (FOR OUTPUT SHAFT FRONT)	2-D6
BEARING (FOR OUTPUT SHAFT REAR)	2-D6
	2-K2
BEARING (FOR STEERING KNUCKLE ARM)	2-F14
BEARING (FOR STEERING WORM)	2-C11
BEARING (FOR TIMER HUB)	1-J10
BEARING (FOR TRANSFER HIGH SPEED OUTPUT GEAR)	2-J6
BEARING (FOR TRANSFER IDLER GEAR)	2-J6
BEARING (FOR TRANSFER LOW SPEED OUTPUT GEAR)	2-J6
BEARING (FOR TRANSFER OUTPUT FRONT SHAFT)	2-K6
BEARING (FOR VANE PUMP SHAFT)	2-I11
BEARING (FOR WINCH MOTOR ARMATURE)	2-E8
BEARING (FOR 1ST GEAR NEEDLE)	2-L2
BEARING OR ROLLER (FOR COUNTER GEAR FRONT)	2-M2
BEARING OR ROLLER (FOR COUNTER GEAR REAR)	2-M2
BEARING SET, CAMSHAFT	1-H3
BEARING SET, CONNECTING ROD	1-D3
BEARING SET, CRANKSHAFT	1-C3
BEARING SUB-ASSY	1-A10
BEARING SUB-ASSY, CENTER	1-D8
BEARING SUB-ASSY, UNIVERSAL JOINT SPIDER	2-I7
BEARING, (FOR REAR AXLE SHAFT)	2-E9
BEARING, BALL (FOR CLUTCH RELEASE HUB)	2-B1
BEARING, COMPRESSOR CRANKSHAFT, FRONT	4-K6
BEARING, COMPRESSOR CRANKSHAFT, REAR	4-M6
BEARING, CONNECTING ROD	1-D3
BEARING, CRANKSHAFT	1-C3
BEARING, FRONT AXLE DIFFERENTIAL	2-C10
BEARING, FRONT AXLE DRIVE PINION, FRONT	2-E10
BEARING, FRONT AXLE DRIVE PINION, REAR	2-F10

BEARING - BODY

PART NAME	LOCATION
BEARING, GEAR THRUST	2-D8
BEARING, INJECTION PUMP GEAR THRUST	1-E2
BEARING, MAGNET CLUTCH	4-M6
BEARING, NEEDLE ROLLER (FOR POWER STEERING GEAR HOUSING)	2-M10
BEARING, NEEDLE ROLLER (FOR TRANSFER OUTPUT SHAFT FRONT)	2-K6
BEARING, NEEDLE ROLLER (FOR 2ND GEAR)	2-L2
BEARING, RADIAL BALL (FOR OUTPUT SHAFT FRONT)	2-K4
BEARING, RADIAL BALL (FOR OUTPUT SHAFT REAR)	2-K4
BEARING, RADIAL BALL (FOR TRANSFER INPUT GEAR)	2-J6
BEARING, STARTER ARMATURE	1-E8
BEARING, TAPER ROLLER (FOR TRANSFER OUTPUT SHAFT)	2-K6
BEARING, TAPERED ROLLER (FOR FRONT AXLE INNER BEARING)	2-H10
BEARING, TAPERED ROLLER (FOR FRONT AXLE OUTER BEARING)	2-H10
BEARING, TAPERED ROLLER (FOR REAR AXLE INNER BEARING)	2-F9
BEARING, TAPERED ROLLER (FOR REAR AXLE OUTER BEARING)	2-F9
BEARING, TAPERED ROLLER (FOR REAR DIFFERENTIAL CASE)	2-L8
BEARING, TAPERED ROLLER (FOR REAR DRIVE PINION FRONT)	2-K8
BEARING, TAPERED ROLLER (FOR REAR DRIVE PINION REAR)	2-K8
BEARING, THRUST (FOR FRONT CLUTCH HUB)	2-F4
BEARING, THRUST (FOR OUTPUT SHAFT)	2-L4
BEARING, THRUST NEEDLE ROLLER (FOR REAR CLUTCH DRUM)	2-G4
BEARING, THRUST NEEDLE ROLLER (FOR REAR PLANETARY FLANGE)	2-L4
BEARING, THRUST NEEDLE ROLLER (FOR STEERING WORM)	2-M10
BEARING, THRUST(FOR OVERDRIVE PLANETARY RING GEAR FLANGE)	2-D4
BEARING, UNIVERSAL JOINT SPIDER (FOR STEERING MAIN SHAFT)	2-C11
BEARING, WATER PUMP	1-K4
BEARING,RADIAL BALL (FOR STEERING MAIN SHAFT)	2-C11
BEARING,THRUST NEEDLEROLLER(FOR OVERDRIVE PLANETARY GEAR)	2-D4
BELLCRANK ASSY, ACCELERATOR	3-D10
BELT ASSY, FRONT SEAT INNER, LH	3-F8
BELT ASSY, FRONT SEAT INNER, RH	3-F8
BELT ASSY, FRONT SEAT LAP TYPE, CENTER	3-E8
BELT ASSY, FRONT SEAT OUTER, LH	3-E8
BELT ASSY, FRONT SEAT OUTER, RH	3-E8
BELT ASSY, REAR SEAT LAP TYPE, CENTER	3-F8
BELT ASSY, REAR SEAT LAP TYPE, LH	3-F8
BELT ASSY, REAR SEAT LAP TYPE, RH	3-F8
BELT, V (FOR AIR PUMP)	1-H6
BELT, V (FOR COOLER COMPRESSOR TO CRANKSHAFT PULLEY)	4-K6
BELT, V (FOR FAN AND ALTERNATOR)	1-D5
BELT, V (FOR VANE PUMP)	2-B12
BEZEL, CIGAR LIGHTER HOLE	3-H2
BEZEL, FRONT DOOR INSIDE HANDLE	3-C6
BEZEL, REAR DOOR INSIDE HANDLE	3-J6
BLADE ASSY, REAR WIPER	4-L3
BLADE ASSY, WINDSHIELD WIPER	4-J3
BLADE, VACUUM PUMP, A	1-H8
BLEEDER SUB-ASSY, AIR	1-I9
BLOCK ASSY, JUNCTION	4-F2
BLOCK ASSY, SHORT	1-E1
BLOCK SUB-ASSY, CYLINDER	1-M1
BLOCK, FEED PUMP TAPPET SLIDING	1-H10
BLOWER ASSY, HEATER, FRONT	4-E5
BOARD SUB-ASSY, COWL SIDE TRIM, LH	3-C5
BOARD SUB-ASSY, COWL SIDE TRIM, RH	3-C5
BOARD SUB-ASSY, FRONT DOOR TRIM, LH	3-L5
BUARD SUB-ASSY, FRONT DOOR TRIM, RH	3-K5
BOARD SUB-ASSY, REAR DOOR TRIM, LH	3-H6
BOARD SUB-ASSY, REAR DOOR TRIM, RH	3-H6
BOARD, QUARTER INSIDE TRIM, LH	3-D5
BOARD, QUARTER INSIDE TRIM, RH	3-D5
BODY ASSY, FRONT UPPER VALVE	2-G5
BODY ASSY, LOWER VALVE	2-F5
BODY ASSY, REAR UPPER VALVE	2-F5

PART NAME	LOCATION
BODY SUB-ASSY, FRONT OIL PUMP	2-K3
BODY SUB-ASSY, FUEL FILTER	1-A11
BODY, BOOSTER VALVE	2-F13
BODY, GOVERNOR	2-M4
BOLT (FOR BACKING PLATE TO REAR AXLE HOUSING SETTING)	2-K13
BOLT (FOR BODY MOUNT NO.1 CUSHION)	3-H1
BOLT (FOR BODY MOUNT NO.2 CUSHION)	3-H1
BOLT (FOR BODY MOUNT NO.3 CUSHION)	3-H1
BOLT (FOR BODY MOUNT NO.4 CUSHION)	3-H1
BOLT (FOR BODY MOUNT NO.5 CUSHION)	3-I1
BOLT (FOR BODY MOUNT NO.6 CUSHION)	3-I1
BOLT (FOR BRAKE MASTER CYLINDER)	2-A13
BOLT (FOR CENTER SUPPORT)	2-I4
BOLT (FOR CLUTCH MASTER CYLINDER SETTING)	2-H1
BOLT (FOR CLUTCH PEDAL STOPPER)	2-E1
BOLT (FOR CLUTCH RELEASE CYLINDER SETTING)	2-B2
BOLT (FOR CRANKSHAFT BEARING CAP SET)	1-M1
BOLT (FOR CRANKSHAFT PULLEY SET)	1-F3
BOLT (FOR CYLINDER HEAD SET)	1-H1
BOLT (FOR DIFFERENTIAL CASE)	2-M8
BOLT (FOR DRIVE PLATE & TORQUE CONVERTER SETTING)	2-K3
BOLT (FOR DUST COVER TO STEERING KNUCKLE ARM SETTING)	2-J13
BOLT (FOR EGR PIPE CLAMP)	1-C11
BOLT (FOR FRONT DIFFERENTIAL LOCK CYLINDER SET)	2-A10
BOLT (FOR FRONT DIFFERENTIAL LOCK SHIFT FORK SHAFT SET)	2-A10
BOLT (FOR FRONT OIL PUMP SETTING)	2-K3
BOLT (FOR GOVERNOR BODY)	2-M4
BOLT (FOR OVERDRIVE CASE & TRANSAXLE CASE SETTING)	2-C4
BOLT (FOR REAR DIFFERENTIAL CARRIER SET)	2-J8
BOLT (FOR REAR DIFFERENTIAL LOCK CYLINDER SET)	2-B9
BOLT (FOR REAR DIFFERENTIAL LOCK SHIFT FORK SHAFT SET)	2-B9
BOLT (FOR REAR RING GEAR SET)	2-L8
BOLT (FOR ROCKER SUPPORT SET)	1-J3
BOLT (FOR TRANSFER CASE)	2-G6
BOLT (FOR TRANSFER OUTPUT SHAFT COMPANION FLANGE)	2-G6
BOLT (FOR 5TH SHIFT ARM)	2-B3
BOLT OR NUT, RHEOSTAT CONTROL SET	4-D3
BOLT OR RING, EXHAUST PIPE FRONT (FOR REAR)	1-B6
BOLT SUB-ASSY, BATTERY CLAMP	3-J8
BOLT, BACK DOOR STAY	3-D7
BOLT, BATTERY CLAMP	3-J8
BOLT, BRAKE MASTER CYLINDER RESERVOIR SET	2-A13
BOLT, CLUTCH MASTER CYLINDER RESERVOIR SET	2-H1
BOLT, CONNECTING ROD	1-E3
BOLT, DIAPHRAGM CONNECTING	1-M9
BOLT, DIAPHRAGM CONNECTING, NO.2	1-M9
BOLT, FLYWHEEL SET	1-E3
BOLT, FRONT AXLE DIFFERENTIAL BEARING CAP	2-C10
BOLT, FRONT SPRING, CENTER	2-J14
BOLT, FUSE	4-G6
BOLT, HEXAGON (FOR AIR PUMP BRACKET SETTING)	1-H6
BOLT, HEXAGON (FOR DIFFERENTIAL CASE)	2-D10
BOLT, HEXAGON (FOR DRIVE PLATE SETTING)	2-K3
BOLT, HEXAGON (FOR FRONT CALIPER)	2-I13
BOLT, HEXAGON (FOR IDLE GEAR BOLT LOCK)	1-F3
BOLT, HEXAGON (FOR PROPELLER SHAFT SETTING)	2-I7
BOLT, HEXAGON (FOR STEERING COLUMN BRACKET)	2-D11
BOLT, HUB (FOR FRONT AXLE)	2-H10
BOLT, HUB (FOR REAR AXLE)	2-F9
BOLT, LOCK BALL (FOR POWER TAKE-OFF)	2-C6
BOLT, REAR DIFFERENTIAL BEARING CAP	2-K8
BOLT, REAR SPRING, CENTER	2-C15
BOLT, RING GEAR SET	2-F10
BOLT, ROUND HEAD SQUARE NECK (FOR FRONT BUMPER)	3-K1

PART NAME	LOCATION
BOLT, ROUND HEAD SQUARE NECK (FOR REAR BUMPER)	3-L1
BOLT, ROUND HEXAGON	2-E14
BOLT, SERVICE VALVE	4-L6
BOLT, SET (FOR REAR BRAKE DRUM SETTING)	2-E9
BOLT, SET (FOR SHIFT & SELECT LEVER)	2-C3
BOLT, STUD (FOR AIR CLEANER SETTING)	1-F6
BOLT, STUD (FOR FRONT AXLE DIFFERENTIAL CARRIER SETTING)	2-C10
BOLT, STUD (FOR MANIFOLD TO CARBURETOR)	1-J5
BOLT, STUD (FOR MANIFOLD TO CYLINDER HEAD)	1-J5
BOLT, STUD (FOR MANIFOLD TO EXHAUST PIPE)	1-J5
BOLT, STUD (FOR OUTER SHAFT FLANGE)	2-H10
BOLT, STUD (FOR REAR AXLE HUB)	2-F9
BOLT, STUD (FOR ROCKER SUPPORT)	1-J3
BOLT, STUD (FOR STEERING SET)	2-E14
BOLT, STUD (FOR VALVE PUSH ROD COVER)	1-M1
BOLT, STUD (FOR WATER PUMP COUPLING)	1-K4
BOLT, STUD (FOR WATER PUMP COVER)	1-K4
BOLT, STUD WINCH	2-F8
BOLT, THROUGH	4-L6
BOLT, TILT STEERING SUPPORT STOPPER	2-F11
BOLT, U (FOR FRONT SPRING)	2-K14
BOLT, U (FOR REAR SPRING)	2-A15
BOLT, UNION (FOR OIL COOLER)	1-G4
BOLT, UNION (FOR OIL PUMP OUTLET PIPE)	1-A4
BOLT, UNION (FOR PRESSURE FEED HOSE)	2-B12
BOLT, VANE PUMP FRONT HOUSING AND REAR HOUSING SET	2-J11
BOLT,STUD (FOR TIMING GEAR CASE)	1-E2
BOOSTER ASSY, BRAKE	2-F13
BOOSTER ASSY, CLUTCH W/AIR CLEANER	2-K1
BOOSTER KIT, BRAKE	2-F13
BOOSTER KIT, CLUTCH	2-L1
BOOT (FOR PUMP PLUNGER)	1-A9
BOOT, ACCELERATOR CONNECTING ROD	3-E10
BOOT, CLUTCH BOOSTER PISTON COVER	2-L1
BOOT, CLUTCH MASTER CYLINDER	2-I1
BOOT, CLUTCH RELEASE CYLINDER	2-B2
BOOT, CLUTCH RELEASE FORK	2-B1
BOOT, DIAPHRAGM PUSH ROD	2-C6
BOOT, DUST (FOR 5TH SHIFT ARM SHAFT)	2-D3
BOOT, FRONT DIFFERENTIAL LOCK CYLINDER	2-B10
BOOT, MASTER CYLINDER	2-A13
BOOT, PARKING BRAKE BELLCRANK	2-M13
BOOT, REAR DIFFERENTIAL LOCK CYLINDER	2-B9
BOOT, RESERVOIR, NO.1 (FOR BRAKE MASTER CYLINDER SIDE)	2-A13
BOOT, SHIFT AND SELECT LEVER	3-F3
BOOT, SHIFT LEVER	2-H3
BOOT, SHIFT LEVER, NO.1	3-F3
BOOT, TRANSFER FRONT DRIVE SHIFT	2-B7
BOOT, TRANSFER SHIFT LEVER	3-F3
BOX ASSY, CONSOLE, REAR	3-D4
BOX, FUEL INLET	3-I4
BRACE SUB-ASSY, HOOD LOCK	3-E2
BRACE, INSTRUMENT PANEL TO FLOOR	3-G2
BRACE, INSTRUMENT PANEL, NO.1	3-G2
BRACE, INSTRUMENT PANEL, NO.2	3-G2
BRACE, INSTRUMENT PANEL, NO.3	3-G2
BRACKET (FOR INJECTION PUMP INLET PIPE)	1-A4
BRACKET (FOR RADIATOR RESERVE TANK)	1-E5
BRACKET SUB-ASSY, ENGINE FRONT MOUNTING, LH	3-C1
BRACKET SUB-ASSY, ENGINE FRONT MOUNTING, RH	3-C1
BRACKET SUB-ASSY, FRONT SHOCK ABSORBER, UPPER LH	2-K14
BRACKET SUB-ASSY, FRONT SHOCK ABSORBER, UPPER RH	2-K14
BRACKET SUB-ASSY, HAND BRAKE SIGNAL SWITCH	4-D3
BRACKET SUB-ASSY, OIL FILTER	1-E4

PART NAME	LOCATION
BRACKET SUB-ASSY, REAR SEAT BACK HOLDER	3-L7
BRACKET SUB-ASSY, REAR SEAT CUSHION HOLDER	3-L7
BRACKET SUB-ASSY, REAR SPRING FRONT, LH	2-C15
BRACKET SUB-ASSY, REAR SPRING FRONT, RH	2-C15
BRACKET SUB-ASSY, REAR SPRING REAR, LH	2-D15
BRACKET SUB-ASSY, REAR SPRING REAR, RH	2-C15
BRACKET SUB-ASSY, STEERING COLUMN UPPER SUPPORT	2-F11
BRACKET SUB-ASSY, THROTTLE BELLCRANK, NO.1	2-L5
BRACKET, ACCELERATOR LINK ROD	3-E10
BRACKET, ACCELERATOR PEDAL STOPPER	3-E3
BRACKET, ACCELERATOR WIRE SUPPORT	3-E10
BRACKET, AIR PUMP	1-H6
BRACKET, AIR SWITCHING VALVE	1-J6
BRACKET, ALTERNATOR, NO.1	1-J2
BRACKET, BELLCRANK	2-M13
BRACKET, BODY MOUNTING, NO.2	3-C1
BRACKET, BODY MOUNTING, NO.3	3-C1
BRACKET, BODY MOUNTING, NO.4	3-C1
BRACKET, BODY MOUNTING, NO.5	3-C1
BRACKET, BODY MOUNTING, NO.6	3-C1
BRACKET, BOX SUPPORT	3-E4
BRACKET, BRAKE PEDAL	2-K12
BRACKET, CABLE SUPPORT	2-J12
BRACKET, CENTER FLOOR HEAT INSULATOR, NO.1	3-K3
BRACKET, CHARCOAL CANISTER SUPPORT	3-B10
BRACKET, CLUTCH MASTER CYLINDER	2-I1
BRACKET, COMPRESSOR MOUNTING, NO.1	4-M6
BRACKET, COMPRESSOR MOUNTING, NO.2	4-M6
BRACKET, COMPRESSOR MOUNTING, NO.3	4-M6
BRACKET, COMPRESSOR MOUNTING, NO.4	4-M6
BRACKET, CONSOLE BOX SUPPORT, CENTER	3-C4
BRACKET, CONSOLE BOX SUPPORT, FRONT	3-C4
BRACKET, CONSOLE BOX SUPPORT, REAR	3-C4
BRACKET, COOLER CONDENSER, NO.1	4-G6
BRACKET, DIAPHRAGM CONNECTING	1-M9
BRACKET, DIFFERENTIAL LOCK	2-J9
BRACKET, DIFFERENTIAL LOCK CABLE	2-K9
BRACKET, DIFFERENTIAL LOCK CONTROL, FRONT NO.1	2-J9
BRACKET, DIFFERENTIAL LOCK CONTROL, FRONT NO.2	2-J9
BRACKET, DIFFERENTIAL LOCK CONTROL, REAR NO.1	2-K9
BRACKET, ENGINE MOUNTING, FRONT NO.1 LH	1-I2
BRACKET, ENGINE MOUNTING, FRONT NO.1 RH	1-I2
BRACKET, ENGINE MOUNTING, FRONT, NO.2	1-I2
BRACKET, EXHAUST PIPE CENTER (FOR FRONT)	1-B6
BRACKET, EXHAUST PIPE FRONT (FOR FRONT)	1-B6
BRACKET, EXHAUST PIPE FRONT (FOR REAR)	1-B6
BRACKET, FLEXIBLE HOSE (FOR REAR)	2-D14
BRACKET, FRONT FLEXIBLE HOSE	2-D14
BRACKET, FRONT FLOOR HEAT INSULATOR, NO.1	3-K3
BRACKET, FRONT FLOOR HEAT INSULATOR, NO.2	3-K3
BRACKET, FRONT INNER SEAT TRACK, LOWER FRONT LH	3-C8
BRACKET, FRONT INNER SEAT TRACK, LOWER FRONT RH	3-C8
BRACKET, FRONT LICENSE PLATE	3-E9
BRACKET, FRONT SEAT, REAR	3-D3
BRACKET, FRONT SPRING (FOR FRONT LH)	2-J14
BRACKET, FRONT SPRING (FOR FRONT RH)	2-J14
BRACKET, FRONT SPRING (FOR REAR LH)	2-K14
BRACKET, FRONT SPRING (FOR REAR RH)	2-J14
BRACKET, FUEL CONTROL MOTOR	4-I3
BRACKET, FUEL HOSE PROTECTOR, FRONT	3-I3
BRACKET, FUEL HOSE PROTECTOR, REAR	3-I3
BRACKET, FUEL TUBE CLAMP	3-I3
BRACKET, HEADLAMP CLEANER WASHER	4-F4
BRACKET, IDLE PULLEY	4-M6

PART NAME	LOCATION
BRACKET, INSTRUMENT PANEL SIDE	3-F4
BRACKET, JACK HANDLE SUPPORT	3-F3
BRACKET, JACK SUPPORT, NO.1	3-G3
BRACKET, JACK SUPPORT, NO.2	3-G3
BRACKET, PARKING LOCK PAWL	2-L5
BRACKET, PINTLE HOOK	3-E1
BRACKET, POWER STEERING IDLE PULLEY	2-B12
BRACKET, PROPELLER SHAFT DUST COVER, NO.1	2-J7
BRACKET, PROPELLER SHAFT DUST COVER, NO.2	2-J7
BRACKET, PROPORTIONING VALVE	2-C14
BRACKET, PUMP	2-C12
BRACKET, RADIATOR SHUTTER SUPPORT, LH	3-E2
BRACKET, RADIATOR SHUTTER SUPPORT, RH	3-E2
BRACKET, RADIATOR, NO.1	1-F5
BRACKET, RADIATOR, NO.2	1-F5
BRACKET, RADIATOR, NO.3	1-F5
BRACKET, RADIATOR, NO.4	1-F5
BRACKET, RADIO TUNER MOUNTING	3-H2
BRACKET, RADIO, NO.1	4-I4
BRACKET, RADIO, NO.2	4-J4
BRACKET, REAR BODY MOUNTING, NO.1	3-C1
BRACKET, RECEIVER TANK, NO.1	4-G6
BRACKET, RELAY	4-G3
BRACKET, RELAY, NO.3	4-G3
BRACKET, RELAY, NO.4	4-G3
BRACKET, STABILIZER (FOR REAR)	2-D15
BRACKET, STABILIZER, NO.2	2-L14
BRACKET, STEERING COLUMN, UPPER	2-D11
BRACKET, STEERING DAMPER	2-H12
BRACKET, STOP WIRE	1-C10
BRACKET, STOPPER	1-E10
BRACKET, TAIL GATE PROTECTOR PIPE	3-B7
BRACKET, TAIL PIPE (FOR FRONT)	1-C6
BRACKET, TAIL PIPE (FOR REAR)	1-C6
BRACKET, TAPE PLAYER, NO.1	4-J4
BRACKET, THROTTLE ROD	3-E10
BRACKET, TOOL BAG, SET BAND, NO.1	3-F3
BRACKET, TOOL BAG, SET BAND, NO.2	3-F3
BRACKET, TUBE SUPPORT	2-C12
BRACKET, VACUUM CONTROL VALVE, NO.1	1-A7
BRACKET, VACUUM SWITCHING VALVE	1-A7
BRACKET, WINCH ROLLER, NO.1	2-E8
BREAKER	1-M8
BREAKER ASSY, WIRING CIRCUIT, NO.1	4-C3
BRUSH, ALTERNATOR	1-M7
BRUSH, STARTER	1-E8
BRUSH, WINCH	2-E8
BULB (FOR COOLER SWITCH)	4-E3
BULB (FOR FLOOR SHIFT POSITION INDICATOR LAMP)	2-H3
BULB (FOR FRONT TURN SIGNAL LAMP)	4-C1
BULB (FOR GLOVE BOX)	4-J1
BULB (FOR LICENSE PLATE LAMP)	4-H1
BULB (FOR REAR COMBINATION LAMP)	4-F1
BULB (FOR REAR WINDOW DEFOGGER SWITCH)	4-F3
BULB (FOR WINCH CONTROL SWITCH)	2-F8
BULB, CIGARETTE LIGHTER	4-F3
BULB, COMBINATION METER, NO.1	4-I2
BULB, FRONT MARKER LAMP	4-E1
BULB, HEATER CONTROL INDICATOR LAMP	4-K2
BULB, INDICATOR LAMP	4-K2
BULB, INSPECTION LAMP	4-K1
BULB, REAR SIDE MARKER LAMP	4-I1
BULB, ROOM LAMP, NO.1	4-J1
BULB, ROOM LAMP, NO.2	4-J1

PART NAME	LOCATION
BULB, SPEEDOMETER	4-I2
BULB, TRANSMISSION CONTROL SWITCH	4-E3
BUMPER ASSY, FRONT	3-J1
BUMPER ASSY, REAR	3-L1
BUMPER SUB-ASSY, REAR SPRING	2-C15
BUMPER, FRONT SPRING, NO.1	2-J14
BUMPER, HOOD, FRONT	3-A2
BUMPER, HOOD, REAR	3-A2
BUSH	1-F6
BUSH (FOR ADAPTER SCREW)	1-D10
BUSH (FOR ALTERNATOR RECTIFIER END FRAME)	1-L7
BUSH (FOR BRAKE PEDAL)	2-K12
BUSH (FOR CLUTCH HUB SHIFT LEVER)	2-D8
BUSH (FOR CLUTCH MASTER CYLINDER PUSH ROD CLEVIS)	2-E1
BUSH (FOR CLUTCH PEDAL)	2-E1
BUSH (FOR CONNECTING ROD SMALL END)	1-D3
BUSH (FOR CONNECTING ROD SWIVEL)	2-H3
BUSH (FOR CONTROL SHAFT LEVER)	2-H3
BUSH (FOR CONTROL SHAFT)	2-G3
BUSH (FOR DIFFERENTIAL LOCK CABLE LINK SHAFT)	2-K9
BUSH (FOR DIFFERENTIAL LOCK CONTROL SHAFT)	2-J9
BUSH (FOR DIFFERENTIAL LOCK LEVER)	2-J9
BUSH (FOR ENGINE MOUNTING BRACKET)	1-I2
BUSH (FOR FRONT DIFFERENTIAL LOCK CYLINDER LEVER)	2-B10
BUSH (FOR FRONT DRIVE SHIFT LINK LEVER)	2-A7
BUSH (FOR FRONT SHOCK ABSORBER)	2-K14
BUSH (FOR FRONT SPRING PIN)	2-I14
BUSH (FOR FRONT SPRING SHACKLE)	2-I14
BUSH (FOR PARKING BRAKE EQUALIZER)	2-J12
BUSH (FOR REAR DIFFERENTIAL LOCK CYLINDER LVER)	2-B9
BUSH (FOR REAR SHOCK ABSORBER)	2-D15
BUSH (FOR REAR SPRING PIN)	2-A15
BUSH (FOR REAR SPRING SHACKLE LOWER)	2-B15
BUSH (FOR REAR SPRING SHACKLE UPPER)	2-A15
BUSH (FOR STARTER HOUSING)	1-D8
BUSH (FOR TRANSFER SHIFT LEVER)	2-B7
BUSH (FOR WINCH MOTOR)	2-E8
BUSH OR BEARING, SECTOR SHAFT, NO.1	2-E11
BUSH OR BEARING, SECTOR SHAFT, NO.2	2-E11
BUSH, COMMUTATOR END FRAME	1-E8
BUSH, HEADLAMP CLEANER WASHER JAR	4-F4
BUSH, REAR WIPER LINK PIVOT	4-L3
BUSH, SHIFT LEVER (FOR FLOOR SHIFT)	2-H3
BUSH, SOLID (FOR DRIVE SHAFT)	2-E14
BUSH, SOLID (FOR TRANSFER HIGH SPEED OUTPUT GEAR)	2-J6
BUSH, SOLID (FOR TRANSFER LOW SPEED OUTPUT GEAR)	2-J6
BUSH, SPEEDOMETER DRIVE CABLE	4-J2
BUSH, STABILIZER (FOR REAR)	2-D15
BUSH, STABILIZER, FRONT	2-K14
BUSH, STARTER CENTER BEARING	1-D8
BUSH, TAIL GATE INSIDE HANDLE	3-F7
BUSH, TRANSFER SHIFT LEVER	2-B7
BUSH, VALVE GUIDE EXHAUST	1-I1
BUSH, VALVE GUIDE INTAKE	1-I1
BUSH, WINDSHIELD WASHER JAR	4-B4
BUSH, 3RD & 2ND GEAR	2-L2
BUSHING, GUIDE (FOR FLYWEIGHT)	1-E10
BUSHING, STEPPED FEMALE WINCH	2-F8
BUSHING, STEPPED MALE WINCH	2-F8
BUTTON ASSY, HORN	2-E12
BUTTON SUB-ASSY, GLOVE COMPARTMENT DOOR LOCK	3-I2
BUTTON, DOOR LOCKING (FOR BACK DOOR)	3-E7
BUTTON, DOOR LOCKING (FOR FRONT DOOR)	3-D6
BUTTON, DOOR LOCKING (FOR REAR DOOR)	3-K6

PART NAME	LOCATION
BUTTON, DOOR LOCKING (FOR TAIL GATE	3-E7
BUTTON, HORN, NO.1	2-F12
BUTTON, HORN, NO.2	2-E12
BUTTON, HORN, NO.3	2-F12
BUTTON, SHIFT LEVER KNOB	2-H3
CABLE ASSY, CHOKE	3-E10
CABLE ASSY, DIFFERENTIAL LOCK, FRONT	2-K9
CABLE ASSY, DIFFERENTIAL LOCK, REAR	2-K9
CABLE ASSY, HOOD LOCK CONTROL	3-C2
CABLE ASSY, PARKING BRAKE, NO.1	2-J12
CABLE ASSY, SPEEDOMETER DRIVE, NO.1	4-J2
CABLE ASSY, THROTTLE	2-L5
CABLE ASSY, THROTTLE CONTROL	3-E10
CABLE SUB-ASSY, AIR INLET DAMPER CONTROL	4-J5
CABLE SUB-ASSY, AIRMIX DAMPER CONTROL	4-J5
CABLE SUB-ASSY, DEFROSTER DAMPER CONTROL	4-J5
CABLE SUB-ASSY, FUEL LID LOCK CONTROL	3-L9
CABLE SUB-ASSY, GLOVE COMPARTMENT DOOR STOPPER	3-C4
CABLE SUB-ASSY, WATER VALVE CONTROL	4-J5
CABLE, BATTERY TO BATTERY	4-L1
CABLE, BATTERY TO GROUND	4-L1
CABLE, BATTERY TO MAGNET SWITCH	4-C2
CABLE, BATTERY TO STARTER (FOR BATTERY TO MAIN SWITCH)	4-L1
CABLE, BOND, NO.1	4-C2
CABLE, MAGNET SWITCH TO WINCH	4-C2
CABLE, WINCH TO GROUND	4-C2
CAM ASSY, THROTTLE VALVE	2-J5
CAM, FULL STOP	1-E10
CAMSHAFT	1-H3
CAMSHAFT, INJECTION PUMP	1-I9
CANISTER ASSY, CHARCOAL	3-A10
CAP (FOR FLOOR SHIFT POSITION INDICATOR LAMP)	2-H3
CAP (FOR FRONT SEAT OUTER BELT)	3-E8
CAP ASSY, CLUTCH MASTER CYLINDER RESERVOIR FILLER	2-H1
CAP ASSY, FUEL TANK	3-L9
CAP ASSY, REAR WASHER	4-D4
CAP ASSY, RESERVOIR, NO.2 (FOR REAR SIDE)	2-A13
CAP ASSY, WINDSHIELD WASHER	4-B4
CAP SUB-ASSY, AIR CLEANER	1-F6
CAP SUB-ASSY, DISTRIBUTOR	1-G7
CAP SUB-ASSY, OIL FILLER	1-J1
CAP SUB-ASSY, RADIATOR	1-E5
CAP SUB-ASSY, RESERVE TANK	1-E5
CAP SUB-ASSY, RESERVOIR	2-I11
CAP, BLEEDER PLUG (FOR DISC BRAKE, FRONT)	2-I13
CAP, BLEEDER PLUG (FOR DRUM BRAKE, REAR)	2-L13
CAP, BLEEDER PLUG (FOR RELEASE CYINDER)	2-B2
CAP, CABLE ADJUSTING	2-J12
CAP, COOLER COMPRESSOR SERVICE VALVE	4-M6
CAP, HEADLAMP CLEANER WASHER JAR	4-F4
CAP, IDLE LIMIT	1-J8
CAP, REAR WIPER PIVOT, NO.1	4-L3
CAP, SHIFT LEVER	2-H3
CAP, STEERING KNUCKLE BEARING	2-E14
CAP, TERMINAL, NO.1	4-G2
CAP, WINDSHIELD WIPER PIVOT, NO.1	4-J3
CAP, WINDSHIELD WIPER PIVOT, NO.2	4-J3
CAPSULE, FULL STOP	1-M9
CAPSULE, IDLING	1-M9
CARBURETOR ASSY	1-J8
CARBURETOR KIT	1-J8
CARPET ASSY, FRONT FLOOR	3-L3
CARPET ASSY, REAR FLOOR	3-M3
CARPET ASSY, REAR FLOOR, REAR	3-M3

PART NAME	LOCATION
CARRIER ASSY, DIFFERENTIAL, REAR	2-J8
CARRIER ASSY, FRONT AXLE	2-B10
CARRIER ASSY, JACK	3-E9
CARRIER ASSY, SPARE WHEEL	3-F1
CARRIER SUB-ASSY, DIFFERENTIAL, REAR	2-J8
CARRIER SUB-ASSY, FRONT AXLE	2-C10
CASE SUB-ASSY, AUTOMATIC TRANSMISSION	2-M3
CASE SUB-ASSY, DEFFERENTIAL	2-M8
CASE SUB-ASSY, OVERDRIVE	2-C4
CASE SUB-ASSY, REAR FLOOR PAN RETRACTOR, LH	3-I3
CASE SUB-ASSY, REAR FLOOR PAN RETRACTOR, RH	3-I3
CASE SUB-ASSY, TIMING GEAR	1-E2
CASE SUB-ASSY, WINCH GEAR	2-A8
CASE, COMBINATION METER	4-I2
CASE, FRONT AXLE DIFFERENTIAL	2-C10
CASE, MANUAL TRANSMISSION	2-F2
CASE, OIL COOLER	1-H4
CASE, POWER TAKE-OFF	2-C6
CASE, TRANSFER	2-G6
CENTER PLATE SUB-ASSY, BOOSTER	2-F13
CHAMBER SUB-ASSY, COMBUSTION	1-D9
CHANNEL SUB-ASSY, FRONT DOOR GLASS, LH	3-F6
CHANNEL SUB-ASSY, FRONT DOOR GLASS, RH	3-F6
CHANNEL SUB-ASSY, REAR DOOR GLASS, LH	3-M6
CHANNEL SUB-ASSY, REAR DOOR GLASS, RH	3-M6
CHANNEL, ROOF DRIP SIDE, FRONT LH	3-G4
CHANNEL, ROOF DRIP SIDE, FRONT RH	3-G4
CHANNEL, ROOF DRIP, REAR LH	3-G4
CHANNEL, ROOF DRIP, REAR RH	3-G4
CHECK ASSY, FRONT DOOR	3-A6
CHECK ASSY, REAR DOOR	3-I6
CLAMP (FOR AIR CLEANER HOSE, NO.1)	1-G6
CLAMP (FOR AIR CLEANER HOSE, NO.2)	1-G6
CLAMP (FOR EGR VACUUM MODULATOR)	1-C11
CLAMP (FOR FRONT AXLE BREATHER HOSE)	2-B10
CLAMP (FOR FUEL HOSE)	1-E11
CLAMP (FOR INJECTION PUMP INLET PIPE)	1-A4
CLAMP (FOR OIL RESERVOIR TO PUMP HOSE)	2-B12
CLAMP (FOR REAR AXLE BRATHER HOSE)	2-C9
CLAMP (FOR RESERVOIR TANK INLET HOSE)	2-B12
CLAMP (FOR RETURN TUBE OUTLET HOSE)	2-B12
CLAMP NO.1, EXHAUST PIPE FRONT (FOR REAR)	1-B6
CLAMP OR CLIP (FOR NOZZLE LEAKAGE PIPE SET)	1-E9
CLAMP OR CLIP (FOR RADIATOR RESERVE TANK HOSE)	1-E5
CLAMP OR CLIP, HOSE (FOR OIL COOLER HOSE)	1-H4
CLAMP OR CLIP, HOSE (FOR RADIATOR INLET)	1-E5
CLAMP OR CLIP, HOSE (FOR RADIATOR OUTLET, NO.1)	1-F5
CLAMP OR CLIP, HOSE (FOR RADIATOR OUTLET, NO.2)	1-F5
CLAMP OR CLIP, HOSE (FOR WATER BY-PASS HOSE)	1-C5
CLAMP OR CLIP, NO.1 (FOR AIR INJECTION SYSTEM HOSE, NO.1)	1-I6
CLAMP OR CLIP, NO.2 (FOR AIR INJECTION SYSTEM HOSE, NO.2)	1-I6
CLAMP OR CLIP, NO.3 (FOR AIR INJECTION SYSTEM HOSE, NO.3)	1-I6
CLAMP OR CLIP, NO.4 (FOR AIR INJECTION SYSTEM HOSE, NO.4)	1-I6
CLAMP OR CLIP, NO.5 (FOR AIR INJECTION SYSTEM HOSE, NO.5)	1-J6
CLAMP OR CLIP, NO.6 (FOR AIR INJECTION SYSTEM HOSE, NO.6)	1-J6
CLAMP SUB-ASSY, DISTRIBUTOR	1-H7
CLAMP, AIR CLEANER	1-F6
CLAMP, BALL GUIDE	2-B11
CLAMP, BRAKE TUBE, NO.1	2-D14
CLAMP, BRAKE TUBE, NO.2	2-D14
CLAMP, CHOKE WIRE	1-A9
CLAMP, CORD	1-H7
CLAMP, CORD, NO.2	1-H7
CLAMP, DOOR LOCK CYLINDER AND SLEEVE	3-H7

PART NAME	LOCATION
CLAMP, FLEXIBLE HOSE, NO.1	2-M5
CLAMP, FLEXIBLE HOSE, NO.2	2-M5
CLAMP, FRONT DOOR LOCK LINK	3-D6
CLAMP, FUEL PIPE (HOSE), NO.1	1-I8
CLAMP, FUEL PIPE (HOSE), NO.2	1-I8
CLAMP, FUEL PIPE, NO.1 (FOR INJECTION PUMP)	1-G9
CLAMP, FUEL PIPE, NO.2 (FOR INJECTION PUMP)	1-G9
CLAMP, INJECTION PIPE NO.3	1-G9
CLAMP, INJECTION PIPE, NO.1	1-G9
CLAMP, INJECTION PIPE, NO.2	1-G9
CLAMP, JACK HANDLE	3-G3
CLAMP, OIL COOLER TUBE, NO.1	2-M5
CLAMP, OIL COOLER TUBE, NO.2	2-M5
CLAMP, OIL COOLER TUBE, NO.3	2-M5
CLAMP, OIL COOLER TUBE, NO.4	2-M5
CLAMP, POWER STEERING OIL COOLER INLET HOSE	2-B12
CLAMP, POWER STEERING OIL COOLER OUTLET HOSE	2-B12
CLAMP, REAR DOOR LOCK LINK	3-K6
CLAMP, RESISTIVE CORD, NO.1	1-E7
CLAMP, STEERING RELAY ROD END	2-G12
CLAMP, TAIL GATE LOCK LINK	3-E7
CLAMP, TIE ROD END	2-H12
CLAMP, VENTILATION TUBE	1-L2
CLEANER ASSY, AIR	1-F6
CLEVIS, CLUTCH MASTER CYLINDER PUSH ROD	2-H1
CLEVIS, MASTER CYLINDER PUSH ROD	2-A13
CLEVIS, TRANSFER SHIFT ROD	2-B7
CLIP (FOR CARBURETOR FUEL HOSE)	1-I8
CLIP (FOR DISC BRAKE ANTIRATTLE)	2-I13
CLIP (FOR FRONT DOOR GLASS OUTER WEATHERSTRIP)	3-A6
CLIP (FOR FRONT FENDER APRON SEAL)	3-F2
CLIP (FOR FRONT FLOOR CARPET)	3-L3
CLIP (FOR FRONT FLOOR MAT)	3-L3
CLIP (FOR FUEL HOSE)	1-I8
CLIP (FOR HOOD INSULATOR)	3-A2
CLIP (FOR HOOD TO COWL TOP WEATHERSTRIP)	3-M2
CLIP (FOR REAR DOOR GLASS OUTER WEATHERSTRIP)	3-I6
CLIP (FOR RESERVOIR TUBE)	2-A13
CLIP (FOR ROCKER PANEL MOULDING SET)	3-D9
CLIP (FOR VACUUM HOSE)	2-G13
CLIP (FOR VENTILATION HOSE NO.2)	1-L2
CLIP (FOR VENTILATION HOSE)	1-L2 1-M2
CLIP OR SPRING, RELEASE BEARING HUB	2-B1
CLIP, (FOR HOOD TO RADIATOR SUPPORT SET)	3-A2
CLIP, BOOSTER	2-F13
CLIP, DOOR WEATHERSTRIP (FOR FRONT DOOR)	3-A6
CLIP, DOOR WEATHERSTRIP (FOR REAR DOOR)	3-H6
CLIP, FRONT SPRING, NO.1	2-J14
CLIP, FRONT SPRING, NO.2	2-J14
CLIP, HOSE (FOR FRONT AXLE BREATHER HOSE)	2-B10
CLIP, HOSE (FOR REAR AXLE BREATHER HOSE)	2-C9
CLIP, REAR SPRING, NO.1	2-C15
CLIP, REAR SPRING, NO.2	2-C15
CLOCK ASSY	4-J2
CLUTCH ASSY, MAGNET	4-L6
CLUTCH ASSY, 1 WAY	2-L4
CLUTCH SUB-ASSY, STARTER	1-D8
CLUTCH, 1 WAY	2-C8
CLUTCH, 1 WAY (FOR OVERDRIVE)	2-D4
COCK SUB-ASSY, WATER DRAIN (FOR CYLINDER BLOCK)	1-M1
COIL ASSY, IGNITION	1-D7
COIL, HEAT CONTROL VALVE	1-K5
COIL, STARTER FIELD	1-D8

PART NAME	LOCATION
COLLAR (FOR EXHAUST MANIFOLD)	1-I5
COLLAR (FOR FLOOR SHIFT SETTING)	2-G3
COLLAR (FOR PEDAL SHAFT)	2-K12
COLLAR (FOR STABILIZER BAR)	2-L14
COLLAR (FOR TILT LEVER RETAINER)	2-F11
COLLAR OR NUT (FOR ALTERNATOR DRIVE END FRAME)	1-L7
COLLAR, CLUTCH PEDAL SHAFT	2-E1
COLLAR, MAIN SHAFT BEARING THRUST	2-C11
COLLAR, REAR AXLE HOUSING SIDE	2-B9
COLLAR, THROTTLE VALVE SHAFT	1-F11
COLLAR, TILT STEERING SUPPORT, NO.1	2-F11
COLLAR, TILT STEERING SUPPORT, NO.2	2-F11
COLLER (FOR DIFFERENTIAL LOCK BRACKET)	2-J9
COMPARTMENT SUB-ASSY, GLOVE	3-I2
COMPRESSOR ASSY, COOLER	4-L6
COMPUTER ASSY, EMISSION CONTROL	4-G3
COMPUTER ASSY, TRANSMISSION CONTROL	4-G3
CONDENSER ASSY, COOLER	4-G6
CONDENSER, ALTERNATOR	1-L7
CONDENSER, RADIO SETTING	4-I4
CONNECTOR SUB-ASSY, FUEL TUBE	3-M9
CONNECTOR, COMBINATION METER	4-I2
CONNECTOR, GLOW PLUG NO.1	1-D7
CONNECTOR, INTAKE AIR	1-F6
CONNECTOR, VACUUM HOSE	2-H13
CONNECTOR, VENTURI PIPE	1-F11
CONSOLE ASSY	3-C4
CONTROL ASSY, HEATER OR BOOST VENTILATOR	4-J5
CONVERTER ASSY, TORQUE	2-K3
CONVERTER ASSY, W/CATALYST	1-B6
CONVERTER SUB-ASSY, BOLTAGE	4-I4
COOLER AND ACCESSORY ASSY	4-C5
COOLER ASSY, EGR	1-C11
COOLER ASSY, OIL	1-G4
COOLER SUB-ASSY, OIL	2-B12
CORD (FOR HORN CONTACT RING)	2-F12
CORD (FOR TILT STEERING)	2-C11
CORD SET, COIL AND SPARK, W/RESISTIVE	1-D7
CORD, COIL RESISTIVE	1-D7
CORD, SPARK PLUG RESISTIVE, NO.1	1-D7
CORD, SPARK PLUG RESISTIVE, NO.2	1-D7
CORD, SPARK PLUG RESISTIVE, NO.3	1-E7
CORD, SPARK PLUG RESISTIVE, NO.4	1-E7
CORD, SPARK PLUG RESISTIVE, NO.5	1-E7
CORD, SPARK PLUG RESISTIVE, NO.6	1-E7
CORE, STARTER POLE	1-D8
COUNTER SHAFT	2-B8
COUPLING ASSY, FLUID	1-K4
COVER ASSY, CLUTCH	2-B1
COVER ASSY, WATER PUMP	1-K4
COVER SUB-ASSY, CLUTCH	2-B1
COVER SUB-ASSY, CYLINDER HEAD	1-I1
COVER SUB-ASSY, FLYWHEEL HOUSING	1-E2
COVER SUB-ASSY, FREE WHEEL HUB	2-H10
COVER SUB-ASSY, FRONT OIL PUMP	2-K3
COVER SUB-ASSY, FUEL INLET BOX	3-A10
COVER SUB-ASSY, INJECTION PUMP	1-I9
COVER SUB-ASSY, OIL PUMP	1-M3
COVER SUB-ASSY, PROPELLER SHAFT DUST	2-J7
COVER SUB-ASSY, REAR AXLE HOUSING	2-B9
COVER SUB-ASSY, REAR DOOR SERVICE HOLE, LH	3-H6
COVER SUB-ASSY, REAR DOOR SERVICE HOLE, RH	3-H6
COVER SUB-ASSY, SIDE	2-A11
COVER SUB-ASSY, SLIDING SHAFT DUST	2-I7

PART NAME	LOCATION
COVER SUB-ASSY, TIMING CHAIN OR BELT	1-E2
COVER SUB-ASSY, WINCH GEAR CASE	2-A8
COVER, ALTERNATOR FELT, INNER NO.1	1-L7
COVER, ALTERNATOR FELT, INNER NO.2	1-L7
COVER, AUTO CLOCK HOLE	3-I2
COVER, BACK DOOR LOCK	3-A7
COVER, BACK DOOR SERVICE HOLE, NO.1	3-B7
COVER, BACK DOOR SERVICE HOLE, NO.2	3-B7
COVER, BEARING (FOR END FRAME)	1-E8
COVER, CIGARETTE LIGHTER HOLE	3-I2
COVER, CLUTCH BOOSTER PISTON	2-L1
COVER, CLUTCH HOUSING, NO.1	2-F2
COVER, COMBINATION METER, NO.1	4-I2
COVER, COMMUTATOR WINCH	2-E8
COVER, CONNECTOR (FOR BATTERY TERMINAL)	4-L1
COVER, CONNECTOR WINCH	2-F8
COVER, CONSOLE, REAR	3-E4
COVER, CONTROL RACK	1-I9
COVER, CONTROL SHAFT DUST, NO.1	2-K9
COVER, CONTROL SHAFT DUST, NO.2	2-K9
COVER, CONTROL SHAFT DUST, NO.3	2-K9
COVER, CONTROL SHAFT DUST, NO.4	2-K9
COVER, COWL SIDE INSTRUMENT PANEL BRACKET, LH	3-C5
COVER, COWL SIDE INSTRUMENT PANEL BRACKET, RH	3-C5
COVER, DEFROSTER NOZZLE OPENING, NO.1	3-J2
COVER, DIFFERENTIAL LOCK GROMMET	2-J9
COVER, DIFFERENTIAL LOCK LEVER	3-E4
COVER, DISC BRAKE DUST, FRONT LH	2-J13
COVER, DISC BRAKE DUST, FRONT RH	2-J13
COVER, DUST	2-C11
COVER, DUST PROOF	1-G7
COVER, END FRAME	1-D8
COVER, ENGINE SIDE UNDER, LH	3-E1
COVER, ENGINE UNDER, NO.1	3-E1
COVER, ENGINE UNDER, REAR LH	3-E1
COVER, ENGINE UNDER, REAR RH	3-E1
COVER, FLYWHEEL HOUSING FRONT	1-F2
COVER, FLYWHEEL HOUSING UNDER	1-E2
COVER, FRAME BRUSH	1-M7
COVER, FRONT CLUTCH ACCUMULATOR	2-D5
COVER, FRONT DIFFERENTIAL LOCK	2-A10
COVER, FRONT DOOR SERVICE HOLE, LH	3-A6
COVER, FRONT DOOR SERVICE HOLE, RH	3-M5
COVER, FRONT PILLAR, LH	3-G4
COVER, FRONT PILLAR, RH	3-G4
COVER, FRONT SEAT BACK (FOR BENCH TYPE)	3-K7
COVER, FRONT SEAT BACK, LH (FOR SEPARATE TYPE)	3-K7
COVER, FRONT SEAT BACK, RH (FOR SEPARATE TYPE)	3-K7
COVER, FRONT SEAT CUSHION (FOR BENCH TYPE)	3-J7
COVER, FRONT SEAT CUSHION, LH (FOR SEPARATE TYPE)	3-J7
COVER, FRONT SEAT CUSHION, RH (FOR SEPARATE TYPE)	3-J7
COVER, FUSE BOX OPENING	3-I2
COVER, GLOVE COMPARTMENT DOOR LOCK	3-I2
COVER, GLOW PLUG RELAY	4-B3
COVER, GOVERNOR	1-A10
COVER, IGNITION COIL	1-D7
COVER, INJECTION PUMP CAMSHAFT BEARING	1-I9
COVER, INNER REAR VIEW MIRROR STAY HOLDER	4-A5
COVER, JUNKTION BLOCK	4-G2
COVER, MAGNET SWITCH WINCH	2-F8
COVER, MANUAL DETENT SPRING	2-J5
COVER, MANUAL TRANSMISSION CASE	2-B3
COVER, METER OPENING	3-I2
COVER, OIL PUMP	1-M3

COVER – CROSSMEMBER

H10

PART NAME	LOCATION
COVER, PARKING BRAKE LEVER	2-I12
COVER, PLATE	1-D10
COVER, POSITION INDICATOR HOUSING	2-I3
COVER, POWER TAKE-OFF	2-C6
COVER, PROPELLER SHAFT DUST, NO.1	2-J7
COVER, PROPELLER SHAFT DUST, NO.2	2-J7
COVER, QUARTER TRIM WASHER	3-E5
COVER, RADIO TUNER OPENING	3-H2
COVER, REAR BODY MOUNTING SERVICE HOLE	3-I3
COVER, REAR DIFFERENTIAL LOCK	2-A9
COVER, REAR END	1-K7
COVER, REAR FLOOR SERVICE HOLE	3-I3
COVER, REAR PILLAR, LH	3-D5
COVER, REAR PILLAR, RH	3-D5
COVER, REAR SEAT BACK (FOR BENCH TYPE)	3-K7
COVER, REAR SEAT CUSHION (FOR BENCH TYPE)	3-K7
COVER, REAR SEAT CUSHION LOCK	3-D8
COVER, REAR WIPER ARM	4-L3
COVER, RECLINING HINGE OUTER, LH	3-C8
COVER, RECLINING HINGE OUTER, RH	3-C8
COVER, ROOF HEADLINING REAR TRIM, LH	3-I5
COVER, ROOF HEADLINING REAR TRIM, RH	3-I5
COVER, ROOF SIDE INNER SERVICE HOLE	3-I4
COVER, SECTOR SHAFT END	2-E11
COVER, SHIFTING HOLE	3-D4
COVER, SLIDE (FOR POSITION INDICATOR)	2-I3
COVER, SLIDING SHAFT DUST	2-I7
COVER, SPARE SWITCH HOLE	3-C4 3-I2
COVER, STABILIZER LINK (FOR FRONT)	2-L14
COVER, STABILIZER LINK (FOR REAR)	2-D15
COVER, STARTER BEARING (FOR DRIVE HOUSING)	1-E8
COVER, STEERING COLUMN HOLE	2-D11
COVER, SWITCH HOLE	3-I2
COVER, TAIL GATE SERVICE HOLE, NO.1	3-B7
COVER, TAIL GATE SERVICE HOLE, NO.2	3-B7
COVER, TAIL GATE SERVICE HOLE, NO.3	3-B7
COVER, TILT STEERING SUPPORT STOPPER	2-F11
COVER, TRANSFER CASE, NO.2	2-H6
COVER, TRANSFER POWER TAKE-OFF	2-H6
COVER, TRANSFER SHIFT LEVER BOOT	3-F3
COVER, TRANSMISSION	3-F3
COVER, TRANSMISSION CASE, REAR	2-A4
COVER, TRANSMISSION UNDER	3-E1
COVER, TRANSMISSION UNDER, NO.2	3-E1
COVER, VALVE BODY, NO.2	2-I5
COVER, VALVE PUSH ROD	1-M1
COVER, WATER PROOF (FOR DISTRIBUTOR)	1-G7
COVER, WATER PUMP	1-J4
COVER, WHEEL HOUSE TRIM, LH	3-E5
COVER, WHEEL HOUSE TRIM, RH	3-E5
COVER, WINCH	2-B8
COVER, WINCH CONTROL SWITCH	2-F8
COVER, WINCH DRUM HOUSING	2-B8
COVER, WINDSHIELD WIPER ARM	4-J3
COVER, WIPER MOTOR SERVICE HOLE	3-M2
CRANK SUB-ASSY, THROTTLE LINK BELL	2-L5
CRANK, PARKING BRAKE BELL, NO.1	2-L13
CRANK, PARKING BRAKE BELL, NO.2	2-L13
CRANKSHAFT	1-E3
CRANKSHAFT, COOLER COMPRESSOR	4-K6
CROSSMEMBER SUB-ASSY, CENTER FLOOR, NO.1	3-A3
CROSSMEMBER SUB-ASSY, FRAME, NO.1	3-B1
CROSSMEMBER SUB-ASSY, FRAME, NO.2	3-B1

CROSSMEMBER – DEFLECTOR

PART NAME	LOCATION
CROSSMEMBER SUB-ASSY, FRAME, NO.3	3-B1
CROSSMEMBER SUB-ASSY, FRAME, NO.4	3-B1
CROSSMEMBER SUB-ASSY, REAR FLOOR, NO.1	3-B3
CROSSMEMBER SUB-ASSY, REAR FLOOR, NO.2	3-B3
CROSSMEMBER SUB-ASSY, REAR SHOCK ABSORBER SUPPORT	3-C1
CROSSMEMBER, FRONT	3-F2
CUP KIT, REAR WHEEL CYLINDER	2-L13
CUP, SHOE HOLD DOWN SPRING (FOR REAR BRAKE)	2-L13
CUSHION (FOR CLUTCH PEDAL)	2-E1
CUSHION (FOR FUEL INLET BOX COVER)	3-A10
CUSHION (FOR GLOVE COMPARTMENT)	3-I2
CUSHION (FOR STOP LAMP SWITCH)	2-K12
CUSHION ASSY, FRONT SEAT (FOR BENCH TYPE)	3-L7
CUSHION ASSY, FRONT SEAT, LH (FOR SEPARATE TYPE)	3-L7
CUSHION ASSY, FRONT SEAT, RH (FOR SEPARATE TYPE)	3-L7
CUSHION ASSY, REAR SEAT (FOR BENCH TYPE)	3-M7
CUSHION, BODY MOUNT NO.3 UPPER	3-H1
CUSHION, BODY MOUNT NO.3, LOWER	3-H1
CUSHION, BODY MOUNT NO.4, LOWER	3-H1
CUSHION, BODY MOUNT NO.4, UPPER	3-H1
CUSHION, BODY MOUNT NO.5, LOWER	3-I1
CUSHION, BODY MOUNT NO.5, UPPER	3-H1
CUSHION, BODY MOUNT NO.6, LOWER	3-I1
CUSHION, BODY MOUNT NO.6, UPPER	3-I1
CUSHION, BODY MOUNT, NO.1 LOWER	3-H1
CUSHION, BODY MOUNT, NO.1 UPPER	3-H1
CUSHION, BODY MOUNT, NO.2 LOWER	3-H1
CUSHION, BODY MOUNT, NO.2 UPPER	3-H1
CUSHION, CONSOLE COMPARTMENT DOOR	3-E4
CUSHION, COOLER CONDENSER, NO.1	4-G6
CUSHION, COURTESY SWITCH (FOR REAR DOOR)	4-D3
CUSHION, EXHAUST PIPE CENTER (FOR FRONT)	1-B6
CUSHION, EXHAUST PIPE FRONT (FOR REAR)	1-B6
CUSHION, FRONT STABILIZER	2-L14
CUSHION, FUEL TANK, NO.1	3-A10
CUSHION, SEAT SUPPORT	3-M7
CUSHION, TAIL PIPE (FOR CENTER)	1-C6
CUSHION, TAIL PIPE (FOR FRONT)	1-C6
CUSHION, TAIL PIPE (FOR REAR)	1-C6
CYLINDER AND KEY SET, BACK DOOR LOCK	3-G7
CYLINDER AND KEY SET, DOOR LOCK, LH	3-G7
CYLINDER AND KEY SET, DOOR LOCK, RH	3-G7
CYLINDER AND KEY SET, FUEL INLET LOCK	3-G7
CYLINDER AND KEY SET, IGNITION SWITCH LOCK	3-G7
CYLINDER ASSY, CLUTCH MASTER	2-H1
CYLINDER ASSY, CLUTCH RELEASE	2-B2
CYLINDER ASSY, DIAPHRAGM	2-D7
CYLINDER ASSY, DISC BRAKE, LH	2-J13
CYLINDER ASSY, DISC BRAKE, RH	2-I13
CYLINDER ASSY, FRONT DIFFERENTIAL LOCK	2-A10
CYLINDER ASSY, MASTER, W/O BOOSTER	2-A13
CYLINDER ASSY, REAR DIFFERENTIAL LOCK	2-A9
CYLINDER ASSY, REAR WHEEL BRAKE (FOR LH, FRONT OR UPPER)	2-L13
CYLINDER ASSY, REAR WHEEL BRAKE (FOR RH, FRONT OR UPPER)	2-L13
CYLINDER KIT, BRAKE MASTER	2-A13
CYLINDER KIT, CLUTCH MASTER	2-H1
CYLINDER KIT, CLUTCH RELEASE	2-B2
CYLINDER KIT, DISC BRAKE, FRONT	2-I13
CYLINDER KIT, REAR WHEEL	2-L13
CYLINDER SET, LOCK	3-G7
CYLINDER SUB-ASSY, COOLER COMPRESSOR	4-K6
DAMPER ASSY, STEERING	2-H12
DEFLECTOR, BRAKE DRUM OIL	2-F9
DEFLECTOR, BREATHER OIL	2-H6

PART NAME	LOCATION
DEFLECTOR, DUST (FOR FRONT AXLE)	2-D10
DEFLECTOR, DUST (FOR REAR DIFFERENTIAL)	2-L8
DEFLECTOR, DUST (FOR TRANSFER OUTPUT SHAFT)	2-G6
DIAPHRAGM	1-A9
DIAPHRAGM PLATE SUB-ASSY, BOOSTER FRONT	2-F13
DIAPHRAGM PLATE SUB-ASSY, BOOSTER REAR	2-F13
DIAPHRAGM SUB-ASSY	1-F6
DIAPHRAGM SUB-ASSY, GOVERNOR	1-M9
DIODE	4-F2
DISC ASSY, CLUTCH	2-C1
DISC SUB-ASSY, CLUTCH, INNER	2-C8
DISC, CLUTCH (FOR BRAKE)	2-H4
DISC, CLUTCH (FOR FRONT CLUTCH)	2-F4
DISC, CLUTCH (FOR OVERDRIVE BRAKE)	2-D4
DISC, CLUTCH (FOR OVERDRIVE)	2-C4
DISC, CLUTCH (FOR 1ST & REVERSE BRAKE)	2-J4
DISC, CLUTCH, OUTER	2-C8
DISC, FRONT	2-I10
DISC, REAR CLUTCH	2-G4
DISTRIBUTOR ASSY	1-G7
DOOR ASSY, GLOVE COMPARTMENT	3-I2
DOOR SUB-ASSY, CONSOLE COMPARTMENT	3-D4
DOOR, CONSOLE COMPARTMENT, UPPER	3-E4
DOOR, HEADLAMP, LH	3-M1
DOOR, HEADLAMP, RH	3-M1
DOWEL, SPLIT (FOR STEERING KNUCKLE ARM)	2-F14
DRIVER, SCREW	1-B1
DRUM SUB-ASSY, OVERDRIVE DIRECT CLUTCH	2-C4
DRUM SUB-ASSY, REAR BRAKE	2-E9
DRUM SUB-ASSY, WINCH	2-A8
DRUM, REAR CLUTCH	2-G4
DUCT SUB-ASSY, QUARTER VENTILATOR, LH	3-A5
DUCT SUB-ASSY, QUARTER VENTILATOR, RH	3-A5
DUCT, AIR CLEANER	1-F6
DUCT, AIR, NO.1	4-J5
DUCT, AIR, NO.2	4-J5
DUCT, AIR, NO.3	4-J5
DUCT, AIR, NO.4	4-J5
DUCT, AIR, REAR NO.1	4-F5
DUCT, AIR, SIDE NO.1 LH	4-J5
DUCT, AIR, SIDE NO.1 RH	4-J5
DUCT, AIR, SIDE NO.2 LH	4-J5
DUCT, AIR, SIDE NO.2 RH	4-J5
DUCT, AIR, SIDE NO.3 RH	4-J5
DUCT, COOLING FAN AIR	1-D5
DUCT, COVER WINCH	2-F8
DUCT, YOKE WINCH	2-F8
ELEMENT SUB-ASSY, AIR CLEANER FILTER	1-F6
ELEMENT SUB-ASSY, FUEL FILTER	1-A11
ELEMENT SUB-ASSY, INJECTION PUMP	1-I9
EMBLEM, FRONT FENDER	3-A9
EMBLEM, RADIATOR GRILLE (OR FRONT PANEL)	3-A9
END ASSY (FOR HIGH & LOW SHIFT ROD)	2-B7
END SUB-ASSY, STEERING RELAY ROD, RH	2-G12
END SUB-ASSY, STEERING RELAY ROD, LH	2-G12
END SUB-ASSY, TIE ROD, LH	2-G12
END SUB-ASSY, TIE ROD, RH	2-G12
ENGINE ASSY, PARTIAL	1-D1
EQUALIZER SUB-ASSY, PARKING BRAKE	2-I12
ESCUTCHEON, DOOR REGULATOR HANDLE (FOR FRONT DOOR)	3-E6
ESCUTCHEON, DOOR REGULATOR HANDLE (FOR REAR DOOR)	3-L6
EVAPORATOR SUB-ASSY, COOLER, NO.1	4-H5
EXTENSION SUB-ASSY, JACK HANDLE	1-B1
EXTENSION SUB-ASSY, QUARTER PANEL, LH	3-H4
EXTENSION SUB-ASSY, QUARTER PANEL, RH	3-H4
EXTENSION, FRONT BUMPER, LH	3-K1
EXTENSION, FRONT BUMPER, RH	3-K1
EXTENSION, REAR BUMPER, LH	3-L1
EXTENSION, REAR BUMPER, RH	3-L1
EXTENSION, REAR FLOOR SIDE PANEL, LH	3-I3
EXTENSION, REAR FLOOR SIDE PANEL, RH	3-I3
FAN	1-D5
FAN SUB-ASSY, HEATER BLOWER	4-E5
FAN SUB-ASSY, REAR HEATER BLOWER	4-E5
FAN, ALTERNATOR	1-M7
FAN, NO.2	1-D5
FELT (FOR ALTERNATOR DRIVE END FRAME)	1-L7
FENDER SUB-ASSY, FRONT, LH	3-A2
FENDER SUB-ASSY, FRONT, RH	3-A2
FILLER, FRONT DOOR GLASS CHANNEL	3-F6
FILLER, REAR DOOR GLASS CHANNEL	3-M6
FILTER ASSY, AIR	1-A7
FILTER ASSY, FUEL	1-A11
FILTER ASSY, FUEL (FOR DIESEL)	1-A11
FILTER SUB-ASSY, FUEL SUCTION TUBE	3-L9
FILTER SUB-ASSY, OIL	1-E4
FILTER, FUEL PUMP	1-H10
FILTER, GAS, NO.1	1-A7
FILTER, NOISE	4-I4
FILTER, WINDSHIELD WASHER JAR	4-B4
FILTER, WINDSHIELD WASHER JAR, NO.2	4-B4
FINAL GEAR KIT, DIFFERENTIAL, REAR	2-K8
FINAL GEAR SET, FRONT AXLE DIFFERENTIAL	2-D10
FITTING KIT, NO.1, WINCH	2-K7
FITTING KIT, NO.2, WINCH	2-K7
FLANGE SUB-ASSY, DRIVE PINION COMPANION, REAR	2-L8
FLANGE, BRAKE, NO.1	2-H4
FLANGE, COMPANION (FOR TRANSFER OUTPUT SHAFT)	2-G6
FLANGE, FRONT AXLE DRIVE PINION, W/DEFLECTOR	2-D10
FLANGE, INJECTION PUMP	1-J9
FLANGE, OVERDRIVE BRAKE	2-D4
FLANGE, OVERDRIVE CLUCH	2-D4
FLANGE, OVERDRIVE PLANETARY RING GEAR	2-D4
FLANGE, REAR CLUTCH	2-G4
FLANGE, REAR PLANETARY RING GEAR	2-L4
FLANGE, THERMOSENSER INLET	1-B6
FLANGE, UNIVERSAL JOINT (FOR FRONT POWER TAKE-OFF)	2-C6
FLANGE,BRAKE (FOR 1ST & REVERSE BRAKE)	2-J4
FLASHER ASSY, TURN SIGNAL	4-C3
FLOAT SUB-ASSY	1-M8
FLOAT, CLUTCH MASTER CYLINDER RESERVOIR	2-H1
FLYWEIGHT SUB-ASSY	1-D10
FLYWHEEL SUB-ASSY	1-E3
FOOTREST, FRONT FLOOR	3-E3
FORK SUB-ASSY, CLUTCH RELEASE	2-B1
FORK, FRONT DIFFERENTIAL LOCK SHIFT	2-A10
FORK, POWR TAKE-OFF SHIFT, NO.1	2-D6
FORK, REAR DIFFERENTIAL LOCK SHIFT	2-A9
FORK, REVERSE SHIFT	2-B3
FORK, TRANSFER GEAR SHIFT, NO.1	2-A7
FORK, TRANSFER GEAR SHIFT, NO.2	2-A7
FORK, 1ST & 2ND SHIFT	2-B3
FORK, 3RD & 4TH SHIFT	2-B3
FORK, 5TH SHIFT	2-B3
FRAME ASSY	3-B1
FRAME ASSY, DRIVE END, ALTERNATOR	1-L7
FRAME ASSY, RECTIFIER END	1-L7
FRAME ASSY, STARTER COMMUTATOR END	1-D8

PART NAME	LOCATION
FRAME SUB-ASSY, BACK DOOR OPENING	3-L4
FRAME SUB-ASSY, CUMMUTATOR END (FOR WINCH MOTER)	2-E8
FRAME SUB-ASSY, FRONT DOOR REAR LOWER, LH	3-K5
FRAME SUB-ASSY, FRONT DOOR REAR LOWER, RH	3-K5
FRAME, RECTIFIER END	1-M7
FRAME, WINCH END	2-E8
FREON GAS, AIR CONDITIONER (DRUM, COOLER REFRIGERANT)	4-G6
FUSE, FUSE BLOCK	4-C3
FUSIBLE LINK	4-F2
GAGE ASSY, FUEL RECEIVER	4-J2
GAGE ASSY, FUEL SENDER	4-C3
GAGE ASSY, OIL PRESSURE RECEIVER	4-J2
GAGE ASSY, OIL PRESSURE SENDER	4-C3
GAGE ASSY, WATER TEMPERATURE RECEIVER	4-J2
GAGE ASSY, WATER TEMPERATURE SENDER	4-C3
GAGE SUB-ASSY, OIL LEVEL	1-B2
GAGE SUB-ASSY, TRANSMISSION OIL LEVEL	2-M3
GARNISH, CENTER PILLAR, LH	3-D5
GARNISH, CENTER PILLAR, RH	3-D5
GARNISH, QUARTER PILLAR, LH	3-G5
GARNISH, QUARTER PILLAR, RH	3-G5
GARNISH, QUARTER TRIM, LH	3-F5
GARNISH, QUARTER TRIM, RH	3-F5
GASKET	1-D10
	1-G4
GASKET (FOR CLUTCH MASTER CYLINDER TO FLEXIBLE HOSE TUBE)	2-E1
GASKET (FOR DRAIN PLUG)	2-A8
GASKET (FOR FILLER PLUG)	2-A8
GASKET (FOR FLUID OUTLET PLUG REAR SIDE)	2-A13
GASKET (FOR FLUID OUTLET PLUG)	2-A13
GASKET (FOR FRONT AXLE HOUSING PLUG)	2-B10
GASKET (FOR FRONT DIFFERENTIAL LOCK CYLINDER)	2-B10
GASKET (FOR FRONT POWER TAKE-OFF DRAIN)	2-C6
GASKET (FOR FUEL TANK CAP)	3-L9
GASKET (FOR FUEL TANK SUCTION TUBE)	3-M9
GASKET (FOR FUEL TANK)	3-L9
GASKET (FOR GOVERNOR HOUSING)	1-M9
GASKET (FOR INJECTION PUMP HOUSING)	1-M9
GASKET (FOR INJECTION PUMP INLET PIPE)	1-A4
GASKET (FOR INJECTION PUMP OUTLET PIPE)	1-B4
GASKET (FOR MASTER CYLINDER)	2-A13
GASKET (FOR OIL FILLER CAP)	1-J1
GASKET (FOR OIL PAN DRAIN PLUG)	1-B2
GASKET (FOR OIL PUMP OUTLET PIPE)	1-A4
GASKET (FOR OIL STRAINER)	1-M3
GASKET (FOR PRESSURE FEED HOSE)	2-B12
GASKET (FOR REAR AXLE HOUSING FILLER PLUG)	2-B9
GASKET (FOR REAR DIFFERENTIAL LOCK CYLINDER)	2-B9
GASKET (FOR SUCTION TUBE)	2-D7
GASKET (FOR TRANSFER CASE)	2-G6
GASKET (FOR WARNING SWITCH)	1-A11
GASKET (FOR WINCH CONTROL SWITCH)	2-F8
GASKET KIT, AUTOMATIC TRANSMISSION OVERHAUL	2-J3
GASKET KIT, CARBURETOR	1-J8
GASKET KIT, CLUTCH UNDER COVER	1-F2
GASKET KIT, COOLER COMPRESSOR OVERHAUL	4-L6
GASKET KIT, DIFFERENTIAL CARRIER	2-B9
GASKET KIT, ENGINE OVERHAUL	1-F1
GASKET KIT, ENGINE VALVE GRIND	1-F1
GASKET KIT, FRONT AXLE OVERHAUL	2-E14
GASKET KIT, MANUAL TRANSMISSION OVERHAUL	2-D2
GASKET KIT, POWER STEERING CROSS SHAFT OVERHAUL	2-A11
GASKET KIT, POWER STEERING GEAR	2-A11
GASKET KIT, POWER STEERING PUMP	2-I11

PART NAME	LOCATION
GASKET, AIR CLEANER CAP	1-F6
GASKET, AIR CLEANER TO CARBURETOR	1-F6
GASKET, AIR HORN	1-A9
GASKET, AUTOMATIC TRANSMISSION OIL PAN	2-A4
GASKET, BEARING COVER	1-J9
GASKET, BRAKE BOOSTER	2-H13
GASKET, BRAKE DRUM OIL DEFLECTOR	2-F9
GASKET, BRAKE MASTER CYLINDER	2-B13
GASKET, CENTER SUPPORT APPLY	2-J5
GASKET, CHECK VALVE CHAMBER PLUG	1-G10
GASKET, CLUTCH BOOSTER BRACKET	2-L1
GASKET, CLUTCH MASTER CYLINDER	2-H1
GASKET, CLUTCH UNDER COVER, NO.1	1-E2
GASKET, CLUTCH UNDER COVER, NO.2	1-F2
GASKET, CLUTCH UNDER COVER, NO.3	1-F2
GASKET, CLUTCH UNDER COVER, NO.4	1-F2
GASKET, CLUTCH UNDER COVER, NO.5	1-F2
GASKET, CLUTCH UNDER COVER, NO.6	1-F2
GASKET, CLUTCH UNDER COVER, NO.7	1-F2
GASKET, CYLINDER HEAD	1-H1
GASKET, CYLINDER HEAD COVER	1-J1
GASKET, DELIVERY VALVE	1-J9
GASKET, DIAPHRAGM CYLINDER	2-D7
GASKET, DIAPHRAGM HOUSING CAP	1-A9
GASKET, DIAPHRAGM, CAP	1-A9
GASKET, DRAIN	2-B10
GASKET, DRAIN PLUG (ATM)	2-M3
GASKET, DRAIN PLUG (FOR REAR AXLE HOUSING)	2-B9
GASKET, DRAIN PLUG (MTM)	2-F2
GASKET, EGR INLET	1-B11
GASKET, ENGINE REAR OIL SEAL RETAINER	1-F2
GASKET, EXHAUST MANIFOLD TO HEAD	1-J5
GASKET, EXHAUST PIPE	1-B6
	1-C6
GASKET, EXHAUST PIPE (FOR CENTER)	1-B6
GASKET, FEED PUMP PISTON PLUG	1-H10
GASKET, FILTER BOWL	1-A11
GASKET, FILTER ELEMENT	1-F6
GASKET, FREE WHEEL HUB	2-I10
GASKET, FRONT AXLE DIFFERENTIAL CARRIER	2-C10
GASKET, FRONT AXLE OUTER SHAFT FLANGE	2-H10
GASKET, FRONT BEARING RETAINER (MTM)	2-G2
GASKET, FRONT CLUTCH ACCUMLATOR, NO.1	2-D5
GASKET, FRONT CLUTCH ACCUMLATOR, NO.2	2-D5
GASKET, FRONT END PLATE	1-E2
GASKET, FRONT MARKER LAMP LENS, LH	4-E1
GASKET, FRONT MARKER LAMP LENS, RH	4-E1
GASKET, FRONT OIL PUMP COVER	2-L3
GASKET, FRONT TURN SIGNAL LAMP LENS, LH	4-C1
GASKET, FRONT TURN SIGNAL LAMP LENS, RH	4-C1
GASKET, FUEL PUMP	1-K10
GASKET, FUEL SENDER GAGE	4-C3
GASKET, GOVERNOR BODY	2-M4
GASKET, GOVERNOR COVER	1-D10
GASKET, INJECTION NOZZLE SEAT	1-D9
GASKET, INJECTION PUMP	1-G9
GASKET, INTAKE TO EXHAUST MANIFOLD	1-J5
GASKET, KNUCKLE SPINDLE	2-F14
GASKET, KNUCKLE SPINDLE OIL RETAINER	2-F14
GASKET, LEVEL GAGE	1-A9
GASKET, LICENSE PLATE LAMP BODY	4-H1
GASKET, LICENSE PLATE LAMP LENS	4-H1
GASKET, LOCK UP RELAY VALVE BODY	2-E5
GASKET, MAIN JET	1-A9

PART NAME	LOCATION
GASKET, MAIN PASSAGE PLUG	1-A9
GASKET, MANIFOLD TO CYLINDER HEAD	1-J5
GASKET, MANUAL TRANSM'SSION CASE COVER	2-B3
GASKET, NEEDLE VALVE SEAT	1-A9
GASKET, OIL COOLER	1-G4
GASKET, OIL FILTER	1-E4
GASKET, OIL FILTER BODY	1-E4
GASKET, OIL PAN	1-B2
GASKET, OIL PUMP RELIEF VALVE	1-A4
GASKET, OIL STRAINER	2-E5
GASKET, OUTPUT SHAFT BEARING RETAINER	2-H6
GASKET, POWER TAKE-OFF BEARING RETAINER	2-C6
GASKET, POWER TAKE-OFF COVER	2-C6
GASKET, REAR AXLE HOUSING COVER	2-C9
GASKET, REAR AXLE SHAFT	2-E9
GASKET, REAR COMBINATION LAMP BODY, LH	4-G1
GASKET, REAR COMBINATION LAMP BODY, RH	4-F1
GASKET, REAR DIFFERENTIAL CARRIER	2-C9
GASKET, REAR SIDE MARKER LAMP BODY, LH	4-I1
GASKET, REAR SIDE MARKER LAMP BODY, RH	4-I1
GASKET, SEAT (FOR POWER TAKE-OFF)	2-C6
GASKET, SECONDARY SLOW CUT VALVE	1-M8
GASKET, SECTOR SHAFT END COVER	2-E11
GASKET, SHIFT SHAFT RETAINER	2-B8
GASKET, SOLENOID VALVE	1-B9
GASKET, THERMOSTAT	1-D5
GASKET, TIMING GEAR (OR CHAIN) COVER	1-E2
GASKET, TRANSFER ADAPTER	2-G2
GASKET, TRANSFER CASE	2-H6
GASKET, TRANSFER CASE, FRONT	2-H6
GASKET, TRANSFER COVER	2-H6
GASKET, TRANSFER POWER TAKE-OFF COVER	2-H6
GASKET, TRANSFER SHIFT SHAFT GUIDE	2-D7
GASKET, TRANSMISSION CASE ADPTOR	2-A4
GASKET, TRANSMISSION CASE PLUG	2-G2
GASKET, TRANSMISSION CASE REAR COVER	2-A4
GASKET, UNION NIPPLE	1-A9
GASKET, VALVE BODY PLATE, NO.3	2-F5
GASKET, VALVE BODY PLATE, NO.4	2-F5
GASKET, VALVE BODY, NO.1	2-F5
GASKET, VALVE BODY, NO.2	2-F5
GASKET, VALVE PUSH ROD COVER	1-M1
GASKET, VENTURI	1-A9
	1-F11
GASKET, WATER INLET HOUSING, NO.1	1-C5
GASKET, WATER OUTLET	1-D5
GASKET, WATER OUTLET HOUSING	1-D5
GASKET, WATER PUMP	1-K4
GASKET, WATER PUMP BODY	1-K4
GASKET, WATER PUMP COVER	1-K4
GASKET, WINCH GEAR CASE COVER	2-B8
GEAR ASSY, FRONT PLANETARY	2-K4
GEAR ASSY, OVERDRIVE PLANETARY	2-D4
GEAR ASSY, POWER STEERING	2-A11
GEAR ASSY, REAR PLANETARY	2-L4
GEAR OR SPROCKET, CAMSHAFT TIMING	1-H3
GEAR OR SPROCKET, CRANKSHAFT TIMING	1-F3
GEAR SUB-ASSY, BRAKE SHAFT DRIVEN	2-C8
GEAR SUB-ASSY, COUNTERSHAFT	2-A8
GEAR SUB-ASSY, DRIVE PLATE & RING	2-K3
GEAR SUB-ASSY, FRONT PLANETARY SUN	2-H4
GEAR SUB-ASSY, POWER TAKE-OFF INPUT	2-C6
GEAR SUB-ASSY, REVERSE IDLER	2-L2
GEAR SUB-ASSY, SPEEDMETER DRIVEN (ATM)	2-B4

PART NAME	LOCATION
GEAR SUB-ASSY, SPEEDOMETER DRIVEN (MTM)	2-H2
GEAR SUB-ASSY, TRANSFER HIGH SPEED OUTPUT	2-J6
GEAR SUB-ASSY, TRANSFER LOW SPEED OUTPUT	2-J6
GEAR, BRAKE SHAFT DRIVE	2-D8
GEAR, COUNTER	2-M2
GEAR, COUNTER, NO.1	2-B8
GEAR, COUNTERSHAFT 5TH	2-M2
GEAR, DRIVE	1-J10
GEAR, FLYWHEEL RING	1-E3
GEAR, FRONT AXLE DIFFERENTIAL SIDE	2-D10
GEAR, FRONT OIL PUMP DRIVE	2-L3
GEAR, FRONT OIL PUMP DRIVEN	2-L3
GEAR, FRONT PLANETARY RING	2-L4
GEAR, IDLE, NO.1	1-F3
GEAR, IDLE, NO.2	1-F3
GEAR, OIL PUMP DRIVE	1-M3
GEAR, OIL PUMP DRIVEN	1-M3
GEAR, OVERDRIVE PLANETARY RING	2-D4
GEAR, POWER TAKE-OFF DRIVE	2-J6
GEAR, POWER TAKE-OFF OUTPUT	2-C6
GEAR, REAR DIFFERENTIAL SIDE	2-M8
GEAR, REAR PLANETARY RING	2-L4
GEAR, REAR PLANETARY SUN	2-I4
GEAR, SPEEDOMETER DRIVE (FOR TRANSFER)	2-J6
GEAR, SPIRAL, DISTRIBUTOR	1-G7
GEAR, STARTER IDLE	1-F8
GEAR, TRANSFER IDLER	2-J6
GEAR, TRANSFER INPUT	2-J6
GEAR, WINCH OUTPUT	2-B8
GEAR, 1ST	2-L2
GEAR, 2ND	2-K2
GEAR, 3RD	2-L2
GEAR, 5TH	2-L2
GENERATOR ASSY, SIGNAL	1-H7
GLASS SUB-ASSY, FRONT DOOR, LH	3-A6
GLASS SUB-ASSY, FRONT DOOR, RH	3-A6
GLASS SUB-ASSY, REAR DOOR, LH	3-I6
GLASS SUB-ASSY, REAR DOOR, RH	3-H6
GLASS, BACK DOOR	3-B7
GLASS, GAGE METER	4-I2
GLASS, LEVEL GAGE	1-M8
GLASS, REAR DOOR WINDOW, LH	3-I6
GLASS, REAR DOOR WINDOW, RH	3-I6
GLASS, SIDE WINDOW, NO.1 (FOR FIXED TYPE)	3-J4
GLASS, WINDSHIELD	3-M2
GOVERNOR ASSY, INJECTION PUMP	1-M9
GOVERNOR ASSY, INJECTION PUMP MECHANICAL	1-C10
GOVERNOR SUB-ASSY	1-G7
GRILLE, RADIATOR	3-M1
GRILLE, SPEAKER DOOR	3-M5
GRIP ASSY, BACK DOOR ASSIST	3-H8
GRIP SUB-ASSY, ASSIST, FRONT	3-H8
GRIP SUB-ASSY, ASSIST, REAR	3-H8
GRIP SUB-ASSY, REAR DOOR ASSIST	3-H8
GROMET, WINCH	2-F8
GROMMET (FOR CONNECTING ROD SWIVEL)	2-H3
GROMMET (FOR CONTROL SHAFT LEVER)	2-H3
GROMMET (FOR DIFFERENTIAL LOCK BRACKET)	2-J9
GROMMET (FOR DIFFERENTIAL LOCK LEVER)	2-J9
GROMMET (FOR DIFFERENTIAL LOCK ROD)	2-J9
GROMMET (FOR HIGH & LOW SHIFT ROD)	2-C7
GROMMET (FOR HOOD SUPPORT ROD)	3-C2
GROMMET (FOR PARKING BRAKE FRONT CABLE)	2-J12
GROMMET (FOR SHIFT LEVER PLATE)	2-G3

GROMMET – HOLDER

PART NAME	LOCATION
GROMMET (FOR VENTILATION SYSTEM)	1-L2
GROMMET OR RING, O (FOR STEERING COLUMN CLAMP)	2-D11
GROMMET, CHECK VALVE	2-G13
GROMMET, SCREW (FOR GLOW PLUG)	1-D7
GUIDE, BALL	1-A10
	2-B11
GUIDE, OIL LEVEL GAUGE	1-A2
GUIDE, SPRING	1-E10
GUIDE, THROTTLE CABLE	3-E10
GUIDE, TRANSFER SHIFT LEVER	2-B7
GUSSET SUB-ASSY, CROSSMEMBER, NO.2	3-B1
GUSSET, QUARTER WHEEL HOUSE, REAR LH	3-H4
GUSSET, QUARTER WHEEL HOUSE, REAR RH	3-H4
HANDLE ASSY, FRONT DOOR WINDOW REGULATOR	3-E6
HANDLE ASSY, FRONT DOOR, OUTSIDE LH	3-C6
HANDLE ASSY, FRONT DOOR, OUTSIDE RH	3-C6
HANDLE ASSY, REAR DOOR OUTSIDE, LH	3-J6
HANDLE ASSY, REAR DOOR OUTSIDE, RH	3-J6
HANDLE ASSY, REAR DOOR WINDOW REGULATOR	3-L6
HANDLE SUB-ASSY, FRONT DOOR INSIDE, LH	3-C6
HANDLE SUB-ASSY, FRONT DOOR INSIDE, RH	3-C6
HANDLE, REAR DOOR INSIDE, LH	3-J6
HANDLE, REAR DOOR INSIDE, RH	3-J6
HANDLE, RECLINING ADJUSTER RELEASE	3-C8
HANDLE, TAIL GATE, INSIDE	3-F7
HANGER, RELEASE FORK RETRACTING SPRING	2-B1
HANGER, TRANSMISSION, NO.1	2-A4
HARNESS SUB-ASSY, COOLER WIRING, NO.1	4-H5
HEAD SUB-ASSY, CYLINDER	1-H1
HEAD, COOLER COMPRESSOR CYLINDER	4-L6
HEAD, REVERSE & 5TH SHIFT	2-C3
HEAD, REVERSE SHIFT	2-C3
HEAD, 1ST & 2ND SHIFT	2-C3
HEADLAMP ASSY, LH	4-A1
HEADLAMP ASSY, RH	4-A1
HEADLINING ASSY, ROOF	3-G5
HEADREST ASSY, FRONT SEAT	3-B8
HEATER AND ACCESSORY ASSY	4-C5
HEATER AND ACCESSORY, REAR	4-C5
HEATER ASSY, REAR	4-E5
HINGE ASSY, BACK DOOR, LOWER	3-D7
HINGE ASSY, BACK DOOR, UPPER	3-D7
HINGE ASSY, FRONT DOOR, LOWER LH	3-E6
HINGE ASSY, FRONT DOOR, LOWER RH	3-E6
HINGE ASSY, FRONT DOOR, UPPER LH	3-E6
HINGE ASSY, FRONT DOOR, UPPER RH	3-E6
HINGE ASSY, HOOD, LH	3-C2
HINGE ASSY, HOOD, RH	3-C2
HINGE ASSY, REAR DOOR, LOWER LH	3-L6
HINGE ASSY, REAR DOOR, LOWER RH	3-L6
HINGE ASSY, REAR DOOR, UPPER LH	3-L6
HINGE ASSY, REAR DOOR, UPPER RH	3-L6
HINGE SUB-ASSY, CONSOLE COMPARTMENT DOOR	3-D4
HINGE SUB-ASSY, GLOVE COMPARTMENT DOOR	3-I2
HINGE SUB-ASSY, REAR SEAT CUSHION	3-L7
HOLDER AND NOZZLE SET, NOZZLE	1-D9
HOLDER ASSY, ALTERNATOR BRUSH	1-M7
HOLDER ASSY, STARTER BRUSH	1-E8
HOLDER, ALTERNATOR BRUSH, A	1-M7
HOLDER, DELIVERY VALVE	1-I9
HOLDER, DOOR LOCK CONTROL KNOB	3-E7
HOLDER, DOOR LOCKING (FOR FRONT DOOR)	3-D6
HOLDER, DOOR LOCKING (FOR REAR DOOR)	3-K6
HOLDER, DOOR LOCKING BUTTON COLLAR (FOR FRONT DOOR)	3-M5

HOLDER – HOSE

PART NAME	LOCATION
HOLDER, DOOR LOCKING BUTTON COLLAR (FOR REAR DOOR)	3-H6
HOLDER, FRONT DIFFERENTIAL PINION SHAFT	2-A10
HOLDER, HOOD STAY	3-C2
HOLDER, PINION SHAFT	2-A9
HOLDER, STARTER SPRING	1-F8
HOLDER, SYNCHRONIZER RING	2-L2
HOLDER, THERMISTOR	4-H5
HOLDER, VISOR	3-H8
HOLDER, W/RECTIFIER NEGATIVE, ALTERNATOR	1-M7
HOLDER, W/RECTIFIER POSITIVE, ALTERNATOR	1-M7
HOOD SUB-ASSY	3-A2
HOOK ASSY, PINTLE	3-E1
HOOK SUB-ASSY, ROPE	3-I3
HOOK, EYELET PINTLE	3-E1
HOOK, NO.1	3-E1
HOOK, NO.2	3-E1
HOOK, RADIATOR SHUTTER	3-E2
HOOK, ROOF HEADLINING SUPPORT	3-H5
HORN ASSY, HIGH PITCHED	4-M4
HORN ASSY, LOW PITCHED	4-M4
HORN, AIR	1-M8
HOSE (FOR BREATHER PLUG)	2-M3
HOSE (FOR EGR VACUUM MODULATOR)	1-C11
HOSE (FOR EXTRACT NOZZLE)	3-L2
HOSE (FOR HIGH ALTITUDE COMPENSATOR VALVE)	1-A7
HOSE (FOR IDLE UP DEVICE)	4-D6
HOSE (FOR RADIATOR RESERVE TANK)	1-E5
HOSE (FOR RESERVOIR TANK INLET)	2-B12
HOSE (FOR RETURN TUBE OUTLET)	2-B12
HOSE (FOR VACUUM RESERVOIR TO BRAKE BOOSTER)	2-G13
HOSE (FOR VACUUM TUBE)	2-F7
HOSE OR PIPE, FUEL (FOR INJECTION PUMP TO FUEL FILTER)	1-G9
HOSE SUB-ASSY, FRONT AXLE BREATHER	2-B10
HOSE SUB-ASSY, REAR AXLE BREATHER	2-C9
HOSE, AIR CLEANER, NO.1	1-F6
HOSE, AIR CLEANER, NO.2	1-G6
HOSE, BREATHER	1-E5
HOSE, CLUTCH, NO.1	2-E1
HOS , CONNECTOR TO CHECK VALVE	2-H13
HOSE, COOLER REFRIGERANT DISCHARGE, NO.1	4-G6
HOSE, COOLER REFRIGERANT RIQUID, NO.1	4-H6
HOSE, COOLER REFRIGERANT RIQUID, NO.2	4-H6
HOSE, COOLER REFRIGERANT SUCTION, NO.1	4-H6
HOSE, COOLER UNIT DRAIN, NO.1	4-H5
HOSE, FLEXIBLE (FOR BRAKE TUBE)	2-C14
HOSE, FLEXIBLE (FOR FRONT)	2-C14
HOSE, FLEXIBLE (FOR REAR BRAKE TUBE)	2-C14
HOSE, FUEL	1-E9
HOSE, FUEL	1-I8
HOSE, FUEL (FOR CHECK VALVE)	3-A10
HOSE, FUEL (FOR FUEL EVAPORATIVE SEPARATOR)	3-L9
HOSE, FUEL PIPE, NO.1	1-I3
HOSE, FUEL TANK SUB INLET	3-M9
HOSE, FUEL, NO.1 (FOR CANISTER TO V.S.V.)	3-B10
HOSE, FUEL, NO.1 (FOR EMISSION TUBE, NO.1)	3-M9
HOSE, FUEL, NO.1 (FOR EMISSION TUBE, NO.2)	3-A10
HOSE, FUEL, NO.1 (FOR EMISSION TUBE, NO.3)	3-A10
HOSE, FUEL, NO.1 (FOR FUEL TANK INLET PIPE)	3-L9
HOSE, FUEL, NO.1 (FOR FUEL TANK)	3-L9
HOSE, FUEL, NO.1 (FOR MAIN TUBE, NO.1)	3-M9
HOSE, FUEL, NO.1 (FOR MAIN TUBE, NO.2)	3-M9
HOSE, FUEL, NO.1 (FOR OUTER VENT VALVE TO CARBURETOR)	3-A10
HOSE, FUEL, NO.2 (FOR CANISTER TO V.S.V.)	3-B10
HOSE, FUEL, NO.2 (FOR EMISSION TUBE, NO.3)	3-A10

PART NAME	LOCATION
HOSE, FUEL, NO.2 (FOR FUEL TANK)	3-L9
HOSE, FUEL, NO.2 (FOR MAIN TUBE, NO.2)	3-M9
HOSE, FUEL, NO.2 (FOR OUTER VENT VALVE TO CARBURETOR)	3-A10
HOSE, FUEL, NO.3 (FOR FUEL TANK)	3-L9
HOSE, FUEL, NO.3 (FOR OUTER VENT VALVE TO CARBURETOR)	3-B10
HOSE, FUEL, NO.4 (FOR FUEL TANK)	3-L9
HOSE, FUEL, NO.5 (FOR FUEL TANK)	3-L9
HOSE, FUEL, NO.1 (FOR MAIN TUBE, NO.3)	3-M9
HOSE, FUEL, NO.1 (FOR RETURN TUBE, NO.1)	3-A10
HOSE, FUEL, NO.2 (FOR MAIN TUBE, NO.3)	3-M9
HOSE, FUEL, NO.2 (FOR RETURN TUBE, NO.1)	3-A10
HOSE, HEADLAMP CLEANER (FROM JOINT TO JOINT OR NOZZLE)	4-G4
HOSE, HEADLAMP CLEANER (FROM MOTOR TO JOINT OR NOZZLE)	4-G4
HOSE, HEADLAMP CLEANER WASHER (FROM JOINT TO NOZZLE)	4-G4
HOSE, HEATER WATER INLET, A (FROM ENGINE)	4-M5
HOSE, HEATER WATER INLET, E (TO HEATER UNIT)	4-M5
HOSE, HEATER WATER OUTLET, A (FROM HEATER UNIT)	4-M5
HOSE, HEATER WATER OUTLET, E (TO ENGINE)	4-M5
HOSE, NO.1 (FOR AIR INJECTION SYSTEM)	1-I6
HOSE, NO.1 (FOR CLUTCH BOOSTER VACUUM)	2-K1
HOSE, NO.2 (FOR AIR INJECTION SYSTEM)	1-I6
HOSE, NO.2 (FOR CLUTCH BOOSTER VACUUM)	2-K1
HOSE, NO.3 (FOR AIR INJECTION SYSTEM)	1-I6
HOSE, NO.3 (FOR CLUTCH BOOSTER VACUUM)	2-K1
HOSE, NO.4 (FOR AIR INJECTION SYSTEM)	1-I5
HOSE, NO.5 (FOR AIR INJECTION SYSTEM)	1-J6
HOSE, NO.6 (FOR AIR INJECTION SYSTEM)	1-J6
HOSE, OIL COOLER	1-G4 1-H4
HOSE, OIL COOLER INLET, NO.1	2-A6
HOSE, OIL COOLER INLET, NO.2	2-A6
HOSE, OIL COOLER OUTLET, NO.1	2-A6
HOSE, OIL COOLER OUTLET, NO.2	2-A6
HOSE, OIL RESERVOIR TO PUMP	2-B12
HOSE, POWER STEERING OIL COOLER INLET	2-B12
HOSE, POWER STEERING OIL COOLER OUTLET	2-B12
HOSE, PRESSURE FEED	2-B12
HOSE, RADIATOR, INLET	1-E5
HOSE, RADIATOR, OUTLET	1-E5
HOSE, REAR HEATER WATER INLET, A (FROM ENGINE)	4-A6
HOSE, REAR HEATER WATER INLET, B	4-A6
HOSE, REAR HEATER WATER INLET, E (TO HEATER UNIT)	4-A6
HOSE, REAR HEATER WATER INLET, G	4-B6
HOSE, REAR HEATER WATER OUTLET, A (FROM HEATER UNIT)	4-B6
HOSE, REAR HEATER WATER OUTLET, B	4-B6
HOSE, REAR HEATER WATER OUTLET, C	4-B6
HOSE, REAR HEATER WATER OUTLET, E (TO ENGINE)	4-B6
HOSE, REAR HEATER WATER OUTLET, G	4-B6
HOSE, REAR WASHER (FROM JOINT TO JOINT OR NOZZLE)	4-E4
HOSE, REAR WASHER (FROM JOINT TO NOZZLE)	4-E4
HOSE, REAR WASHER (FROM MOTOR TO JOINT OR NOZZLE)	4-E4
HOSE, SPEEDOMETER DRIVE CABLE	4-J2
HOSE, UNION TO CHECK VALVE	2-G13
HOSE, UNION TO CONNECTOR	2-H13
HOSE, UNION TO WAY	2-G13
HOSE, VACUUM NO.1 (VENTURI TO GOVERNOR)	1-E11
HOSE, VACUUM NO.2 (VENTURI TO GOVERNOR)	1-E11
HOSE, VACUUM (FOR FRONT DRIVE SHIFT)	2-F7
HOSE, VACUUM PUMP OIL INLET	1-H8
HOSE, VACUUM PUMP OIL OUTLET	1-H8
HOSE, VACUUM, NO.1 (FOR FRONT DRIVE SHIFT)	2-F7
HOSE, VACUUM, NO.2 (FOR FRONT DRIVE SHIFT)	2-F7
HOSE, VACUUM, NO.3 (FOR FRONT DRIVE SHIFT)	2-F7
HOSE, VACUUM, NO.4 (FOR FRONT DRIVE SHIFT)	2-F7

PART NAME	LOCATION
HOSE, VACUUM, NO.5 (FOR FRONT DRIVE SHIFT)	2-F7
HOSE, VENTILATION	1-L2
HOSE, VENTILATION, NO.2	1-L2
HOSE, VENTILATION, NO.3	1-L2
HOSE, VENTILATION, NO.4	1-L2
HOSE, WATER BY-PASS	1-C5
HOSE, WAY TO CHECK VALVE	2-H13
HOSE, WINDSHIELD WASHER (FROM JOINT TO JOINT OR NOZZLE)	4-B4
HOSE, WINDSHIELD WASHER (FROM JOINT TO NOZZLE)	4-C4
HOSE, WINDSHIELD WASHER (FROM MOTOR TO JOINT OR NOZZLE)	4-B4
HOUSING ASSY, FRONT AXLE	2-B10
HOUSING ASSY, REAR AXLE	2-B9
HOUSING ASSY, STARTER DRIVE	1-D8
HOUSING ASSY, STEERING GEAR	2-E11
HOUSING SUB-ASSY, FULLROAD STOPPER	1-C10
HOUSING SUB-ASSY, HEADLAMP, LH	4-A1
HOUSING SUB-ASSY, HEADLAMP, RH	4-A1
HOUSING SUB-ASSY, INJECTION PUMP	1-I9
HOUSING SUB-ASSY, MECHANICAL GOVERNOR	1-C10
HOUSING SUB-ASSY, POWER STEERING GEAR	2-M10
HOUSING SUB-ASSY, PUMP, FRONT	2-H11
HOUSING SUB-ASSY, PUMP, REAR	2-I11
HOUSING SUB-ASSY, STEERING GEAR	2-E11
HOUSING SUB-ASSY, VALVE	2-M10
HOUSING SUB-ASSY, WINCH DRUM	2-A8
HOUSING, AUTOMATIC TRANSMISSION	2-M3
HOUSING, CLUTCH	2-F2
HOUSING, GOVERNOR DIAPHRAGM	1-M9
HOUSING, POLE CONNECTOR	1-H7
HOUSING, POSITION INDICATOR, LOWER	2-I3
HOUSING, POSITION INDICATOR, UPPER	2-I3
HOUSING, SHIFT LEVER	2-D3
HOUSING, STEERING COLUMN	2-D11
HOUSING, WATER INLET	1-C5
HOUSING, WATER OUTLET	1-D5
HUB (OR SHAFT) & BRAKE DRUM REAR AXLE, LH	2-F9
HUB (OR SHAFT) & BRAKE DRUM REAR AXLE, RH	2-F9
HUB ASSY, FREE WHEEL	2-I10
HUB SUB-ASSY, MAGNET CLUTCH	4-M6
HUB, BOOSTER REACTION DISK	2-F13
HUB, CLUTCH RELEASE BEARING	2-B1
HUB, FRONT AXLE	2-I10
HUB, FRONT CLUTCH	2-F4
HUB, REAR AXLE	2-E9
HUB, REAR CLUTCH	2-G4
HUB, TIMER	1-J10
HUB, TRANSFER CLUTCH	2-K6
HUB, TRANSMISSION CLUTCH, NO.2	2-L2
HUB, WINCH CLUTCH	2-C8
IGNITER ASSY	4-G3
INLET, AIR CLEANER, NO.1	1-F6
INLET, EGR	1-B11
INSULATOR	1-M8
INSULATOR ASSY, COWL TOP	3-M2
INSULATOR ASSY, DASH PANEL	3-F2
INSULATOR SUB-ASSY, BRAKE BOOSTER HEAT	2-G13
INSULATOR, AIR INJECTION HOSE	1-I6
INSULATOR, CARBURETOR HEAT	1-J8
INSULATOR, DASH PANEL HEAT, NO.1	3-F2
INSULATOR, ENGINE MOUNTING, FRONT	1-J2
INSULATOR, ENGINE MOUNTING, REAR NO.1	1-J2
INSULATOR, EXHAUST MANIFOLD HEAT, NO.1	1-J5
INSULATOR, EXHAUST MANIFOLD HEAT, NO.2	1-J5
INSULATOR, EXHAUST MANIFOLD HEAT, NO.3	1-J5

PART NAME	LOCATION
INSULATOR, EXHAUST PIPE HEAT, NO.1	1-C6
INSULATOR, EXHAUST PIPE HEAT, NO.2	1-C6
INSULATOR, FRONT FLOOR HEAT, NO.1	3-K3
INSULATOR, FRONT FLOOR HEAT, NO.3	3-K3
INSULATOR, FUEL PUMP	1-K10
INSULATOR, HOOD	3-A2
INSULATOR, MAIN MAFFLAR HEAT	3-K3
INSULATOR, RADIATOR MOUNTING	1-F5
INSULATOR, RADIATOR PIPE	1-E5
JACK ASSY	1-B1
JAR ASSY, HEADLAMP CLEANER WASHER	4-F4
JAR ASSY, REAR WASHER	4-D4
JAR ASSY, WINDSHIELD WASHER	4-B4
JET SUB-ASSY, SLOW	1-M8
JET SUB-ASSY, 2ND	1-M8
JET, POWER	1-M8
JET, 1ST MAIN	1-M8
JET, 2ND MAIN	1-M8
JOINT OR UNION, FRONT HEATER HOSE THROUGH OR INLET VALVE	4-M5
JOINT OR UNION, WATER HOSE THROUGH	4-A6
JOINT, BACK WINDOW MOULDING, UPPER	3-C9
JOINT, HEADLAMP CLEANER HOSE, NO.1	4-F4
JOINT, QUARTER WINDOW MOULDING	3-C9
JOINT, REAR WASHER ELBOW	4-D4
JOINT, REAR WASHER HOSE, NO.1	4-D4
JOINT, ROOF DRIP CHANNEL	3-L4
JOINT, ROOF DRIP SIDE FINISH MOULDING	3-C9
JOINT, WINDSHIELD WASHER HOSE	4-B4
KEY (FOR CRANKSHAFT TIMING GEAR)	1-F3
KEY (FOR NO.3 LEVER)	1-M9
KEY (FOR SPRAIN SHAFT)	1-J9
KEY OR BALL, 1ST GEAR BEARING INNER RACE LOCK	2-L2
KEY, BLANK	3-G7
KEY, BOOSTER VALVE PLUNGER	2-F13
KEY, COMPRESSOR CRANKSHAFT	4-K6
KEY, CRANKSHAFT (FOR CRANKSHAFT PULLEY SET)	1-F3
KEY, OIL PUMP DRIVE SHAFT	1-M3
KEY, STRAIGHT (FOR ACCUMULATOR CONTROL VALVE)	2-I5
KEY, STRAIGHT (FOR CUT BACK VALVE)	2-H5
KEY, STRAIGHT (FOR DETENT REGULATOR)	2-G5
KEY, STRAIGHT (FOR INTERMEDIATE MODULATOR VALVE)	2-G5
KEY, STRAIGHT (FOR LOW COAST SHIFT VALVE)	2-G5
KEY, STRAIGHT (FOR LOW MODULATOR VALVE)	2-G5
KEY, STRAIGHT (FOR MANUAL DOWN TIMING VALVE)	2-I5
KEY, STRAIGHT (FOR OVERDRIVE CLUTCH EXHAUST VALVE)	2-I5
KEY, STRAIGHT (FOR SECONDARY REGULATOR VALVE)	2-H5
KEY, STRAIGHT (FOR 2ND LOCK VALVE)	2-H5
KEY, STRAIGHT (FOR 3-2 KICK DOWN ORIFICE CONTROL VALVE)	2-I5
KEY, SYNCHROMESH SHIFTING (FOR NO.3 CLUTCH HUB)	2-L2
KEY, SYNCHROMESH SHIFTING, NO.2	2-L2
KEY, VALVE STOPPER	2-F13
KEY, VALVE STOPPER (FOR CLUTCH BOOSTER)	2-K1
KEY, VANE PUMP PULLEY	2-I11
KEY, WOODRUFF (FOR ADJUSTING LEVER)	1-D10
KEY, WOODRUFF (FOR FROATING LEVER)	1-E10
KEY, WOODRUFF (FOR POWER TAKE-OFF OUTPUT SHAFT)	2-D6
KEY, WOODRUFF (FOR REVERSE IDLER GEAR SHAFT)	2-M2
KEY, WOODRUFF (FOR TIMING GEAR)	1-H3
KNOB AND ELEMENT ASSY, CIGARETTE LIGHTER	4-F3
KNOB SUB-ASSY, SHIFT LEVER	2-A7
KNOB SUB-ASSY, SHIFT LEVER (FOR FLOOR SHIFT)	2-G3
KNOB, CHOKE CONTROL CABLE	3-E10
KNOB, CLOCK	4-J2
KNOB, DIFFERENTIAL LOCK, FRONT	2-J9

PART NAME	LOCATION
KNOB, DIFFERENTIAL LOCK, REAR	2-J9
KNOB, HEATER	4-E5
KNOB, HEATER CONTROL LEVER	4-J5
KNOB, LIGHT CONTROL RHEOSTAT	4-D3
KNOB, PARKING BRAKE RELEASE ROD	2-I12
KNOB, RADIO RECEIVER CONTROL	4-I4
KNOB, RADIO RECEIVER SWITCH	4-I4
KNOB, WINCH CLUTCH LEVER	2-D8
KNUCKLE, STEERING, LH	2-E14
KNUCKLE, STEERING, RH	2-E14
LAMP ASSY, FRONT MARKER, LH	4-E1
LAMP ASSY, FRONT MARKER, RH	4-E1
LAMP ASSY, FRONT TURN SIGNAL, LH	4-C1
LAMP ASSY, FRONT TURN SIGNAL, RH	4-C1
LAMP ASSY, GLOVE BOX	4-J1
LAMP ASSY, HEATER CONTROL INDICATOR, NO.1	4-K2
LAMP ASSY, INDICATOR	4-K2
LAMP ASSY, INSPECTION	4-K1
LAMP ASSY, LICENSE PLATE	4-H1
LAMP ASSY, REAR COMBINATION, LH	4-F1
LAMP ASSY, REAR COMBINATION, RH	4-F1
LAMP ASSY, REAR SIDE MARKER, LH	4-I1
LAMP ASSY, REAR SIDE MARKER, RH	4-I1
LAMP ASSY, ROOM, NO.1	4-J1
LAMP ASSY, ROOM, NO.2	4-J1
LEAD, DISTRIBUTOR BREAKER	1-G7
LEAF, FRONT SPRING, NO.1	2-I14
LEAF, FRONT SPRING, NO.2	2-I14
LEAF, FRONT SPRING, NO.3	2-I14
LEAF, FRONT SPRING, NO.4	2-I14
LEAF, FRONT SPRING, NO.5	2-J14
LEAF, FRONT SPRING, NO.6	2-J14
LEAF, REAR SPRING, NO.1	2-B15
LEAF, REAR SPRING, NO.2	2-B15
LEAF, REAR SPRING, NO.3	2-B15
LEAF, REAR SPRING, NO.4	2-B15
LEAF, REAR SPRING, NO.5	2-B15
LEAF, REAR SPRING, NO.6	2-B15
LEAF, REAR SPRING, NO.7	2-C15
LENS, CIGARETTE LIGHTER INDICATOR	4-F3
LENS, CONSOLE END PANEL LAMP	2-I3
LENS, FRONT MARKER LAMP, LH	4-E1
LENS, FRONT MARKER LAMP, RH	4-E1
LENS, FRONT TURN SIGNAL LAMP, LH	4-C1
LENS, FRONT TURN SIGNAL LAMP, RH	4-C1
LENS, HEATER CONTROL INDICATOR	4-K2
LENS, LICENSE PLATE LAMP	4-H1
LENS, METER, NO.1	4-I2
LENS, PARKING BRAKE WARNING LAMP	2-I3
LENS, REAR COMBINATION LAMP, LH	4-F1
LENS, REAR COMBINATION LAMP, RH	4-F1
LENS, REAR SIDE MARKER LAMP, LH	4-I1
LENS, REAR SIDE MARKER LAMP, RH	4-I1
LENS, ROOM LAMP, NO.1	4-J1
LEVER ASSY, FLOATING	1-E10
LEVER ASSY, SHIFT (FOR FLOOR SHIFT)	2-G3
LEVER SUB-ASSY, ADJUSTING	1-D10
LEVER SUB-ASSY, CONTROL	1-E10
LEVER SUB-ASSY, FRONT DRIVE SHIFT LINK	2-A7
LEVER SUB-ASSY, HIGH & LOW SHIFT INNER	2-A7
LEVER SUB-ASSY, INJECTION PUMP, NO.1	1-M9
LEVER SUB-ASSY, INJECTION PUMP, NO.3	1-M9
LEVER SUB-ASSY, MANUAL VALVE	2-L5
LEVER SUB-ASSY, PARKING BRAKE	2-I12

PART NAME	LOCATION
LEVER SUB-ASSY, PARKING BRAKE SHOE, LH (FOR REAR BRAKE)	2-L13
LEVER SUB-ASSY, PARKING BRAKE SHOE, RH (FOR REAR BRAKE)	2-L13
LEVER SUB-ASSY, POWER TAKE-OFF SHIFT LINK	2-D6
LEVER SUB-ASSY, SHIFT (FOR FLOOR SHIFT)	2-G3
LEVER SUB-ASSY, SUPPORT	1-D10
LEVER SUB-ASSY, THROTTLE SHAFT ADJUSTING	1-E11
LEVER, AUTOMATIC ADJUST, LH (FOR REAR BRAKE)	2-M13
LEVER, AUTOMATIC ADJUST, RH (FOR REAR BRAKE)	2-M13
LEVER, CABLE GUIDE SUPPORT	2-J12
LEVER, CLUTCH HUB SHIFT	2-D8
LEVER, CONTROL SHAFT (FOR FLOOR SHIFT)	2-H3
LEVER, DIFFERENTIAL LOCK, FRONT	2-J9
LEVER, DIFFERENTIAL LOCK, REAR	2-J9
LEVER, FRONT DIFFERENTIAL LOCK CYLINDER	2-A10
LEVER, FRONT DRIVE SHIFT LINK	2-D7
LEVER, JACK HANDLE	1-B1
LEVER, REAR DIFFERENTIAL LOCK CYLINDER	2-B9
LEVER, SHIFT & SELECT	2-C3
LEVER, SHIFT, INNER NO.1	2-C3
LEVER, STARTER PINION DRIVE	1-D8
LEVER, STEERING TILT	2-F11
LEVER, STOP	1-C10
LEVER, TRANSFER FRONT DRIVE SHIFT	2-B7
LEVER, TRANSFER HIGH & LOW SHIFT	2-B7
LEVER, TRANSFER HIGH AND LOW SHIFT OUTER	2-C7
LEVER, TRANSMISSION CONTROL SHAFT	2-L5
LIFTER, VALVE	1-I3
LIGHTER ASSY, CIGARETTE	4-F3
LINER, CYLINDER	1-B2
LINING, REAR BRAKE SHOE (FOR FRONT OR UPPER)	2-M13
LINING, REAR BRAKE SHOE (FOR REAR OR LOWER)	2-M13
LINK ASSY, DIFFERENTIAL LOCK CABLE	2-K9
LINK ASSY, FRONT DOOR OPEN CONTROL, LH	3-D6
LINK ASSY, FRONT DOOR OPEN CONTROL, RH	3-C6
LINK ASSY, REAR DOOR OPEN CONTROL, LH	3-K6
LINK ASSY, REAR DOOR OPEN CONTROL, RH	3-K6
LINK ASSY, TAIL GATE REMOTE CONTROL	3-E7
LINK ASSY, WINDSHIELD WIPER	4-J3
LINK SUB-ASSY, REAR DOOR LOCKING CONTROL, LH	3-K6
LINK SUB-ASSY, REAR DOOR LOCKING CONTROL, RH	3-J6
LINK SUB-ASSY, STABILIZER	2-D15
LINK, DIFFERENTIAL LOCK, FRONT	2-J9
LINK, DIFFERENTIAL LOCK, REAR	2-J9
LOCK ASSY, BACK DOOR	3-E7
LOCK ASSY, FRONT DOOR, LH	3-C6
LOCK ASSY, FRONT DOOR, RH	3-C6
LOCK ASSY, HOOD	3-C2
LOCK ASSY, REAR DOOR, LH	3-J6
LOCK ASSY, REAR DOOR, RH	3-J6
LOCK ASSY, REAR SEAT CUSHION	3-D8
LOCK ASSY, REAR SEAT CUSHION, LH	3-D8
LOCK ASSY, TAIL GATE, LOWER LH	3-E7
LOCK ASSY, TAIL GATE, LOWER RH	3-E7
LOCK SUB-ASSY, CONSOLE COMPARTMENT DOOR	3-D4
LOCK SUB-ASSY, FUEL TANK CAP	3-L9
LOCK SUB-ASSY, REAR SEAT BACK, LH	3-D8
LOCK SUB-ASSY, REAR SEAT BACK, RH	3-C8
LOCK, FRONT AXLE DIFFERENTIAL ADJUST NUT	2-C10
LOCK, REAR AXLE SHAFT	2-E9
LOCK, REAR DIFFERENTIAL BEARING ADJUSTING NUT	2-M8
LOCK, VALVE SPRING RETAINER	1-I3
LOCK, WIRE	2-B8
LOUVER, QUARTER VENTILATION	3-A5
MAGNET, OIL CLEANER (FOR TRANSMISSION)	2-A4

PART NAME	LOCATION
MANIFOLD ASSY	1-I5
MANIFOLD, AIR INJECTION	1-J6
MANIFOLD, EXHAUST	1-I5
MANIFOLD, INTAKE	1-I5
MARK, STEERING WHEEL PAD	2-E12
MAT ASSY, REAR FLOOR	3-M3
MAT ASSY, REAR FLOOR, REAR	3-M3
MAT, FLOOR, FRONT	3-L3
MAT, REAR SEAT CUSHION	3-B8
MEMBER SUB-ASSY, CENTER FLOOR CROSS, NO.2	3-A3
MEMBER SUB-ASSY, MAIN FLOOR SIDE, LH	3-A3
MEMBER SUB-ASSY, MAIN FLOOR SIDE, RH	3-A3
MEMBER, REAR BASE	2-D8
MEMBER, REAR DIAGONAL	3-B1
METER, VOLTAGE	4-I2
MIRROR ASSY, INNER REAR VIEW	4-A5
MIRROR ASSY, OUTER REAR VIEW, LH	4-A5
MIRROR ASSY, OUTER REAR VIEW, RH	4-A5
MODULATOR ASSY, EGR VACUUM	1-C11
MOTOR AND BRACKET ASSY, WINDSHIELD WIPER	4-J3
MOTOR AND LINK ASSY, REAR WIPER	4-L3
MOTOR AND PUMP ASSY, HEADLAMP CLEANER WASHER	4-F4
MOTOR AND PUMP ASSY, WINDSHIELD WASHER	4-B4
MOTOR ASSY, REAR WASHER	4-D4
MOTOR ASSY, W/MAGNET SWITCH, WINCH	2-E8
MOTOR ASSY, WINCH	2-E8
MOTOR SUB-ASSY, HEATER BLOWER	4-E5
MOTOR SUB-ASSY, REAR HEATER BLOWER	4-E5
MOTOR, COOLING FAN	1-D5
MOTOR, FUEL CONTROL	4-I3
MOULDING, BACK WINDOW CORNER, LOWER LH	3-C9
MOULDING, BACK WINDOW CORNER, LOWER RH	3-C9
MOULDING, BACK WINDOW SIDE, LH	3-C9
MOULDING, BACK WINDOW SIDE, RH	3-C9
MOULDING, BACK WINDOW, LOWER	3-C9
MOULDING, FRONT DOOR BELT, LH	3-C9
MOULDING, FRONT DOOR BELT, RH	3-C9
MOULDING, FRONT DOOR WINDOW FRAME, FRONT LH	3-C9
MOULDING, FRONT DOOR WINDOW FRAME, FRONT RH	3-C9
MOULDING, FRONT DOOR WINDOW FRAME, REAR LH	3-C9
MOULDING, FRONT DOOR WINDOW FRAME, REAR RH	3-C9
MOULDING, QUARTER WINDOW, OUTSIDE FRONT LH	3-C9
MOULDING, QUARTER WINDOW, OUTSIDE FRONT RH	3-C9
MOULDING, QUARTER WINDOW, OUTSIDE REAR LH	3-C9
MOULDING, QUARTER WINDOW, OUTSIDE REAR RH	3-C9
MOULDING, REAR DOOR BELT, LH	3-D9
MOULDING, REAR DOOR BELT, RH	3-C9
MOULDING, REAR DOOR WINDOW FRAME, FRONT LH	3-D9
MOULDING, REAR DOOR WINDOW FRAME, FRONT RH	3-D9
MOULDING, REAR DOOR WINDOW FRAME, REAR LH	3-D9
MOULDING, REAR DOOR WINDOW FRAME, REAR RH	3-D9
MOULDING, REAR DOOR WINDOW FRAME, UPPER LH	3-D9
MOULDING, REAR DOOR WINDOW FRAME, UPPER RH	3-D9
MOULDING, REAR SEAT BACK, LH	3-A8
MOULDING, REAR SEAT BACK, RH	3-A8
MOULDING, REAR SEAT BACK, UPPER	3-A8
MOULDING, REAR SEAT CUSHION, FRONT	3-A8
MOULDING, REAR SEAT CUSHION, LH	3-A8
MOULDING, REAR SEAT CUSHION, REAR LH	3-A8
MOULDING, REAR SEAT CUSHION, REAR RH	3-A8
MOULDING, REAR SEAT CUSHION, RH	3-A8
MOULDING, ROCKER PANEL, LH	3-D9
MOULDING, ROCKER PANEL, RH	3-D9
MOULDING, ROOF CARRIER	3-L4

PART NAME	LOCATION
MOULDING, ROOF DRIP SIDE FINISH, FRONT LH	3-B9
MOULDING, ROOF DRIP SIDE FINISH, FRONT RH	3-B9
MOULDING, ROOF DRIP SIDE FINISH, REAR LH	3-B9
MOULDING, ROOF DRIP SIDE FINISH, REAR RH	3-B9
MOULDING, ROOF DRIP, REAR	3-C9
MOULDING, WINDSHIELD CORNER, LOWER LH	3-B9
MOULDING, WINDSHIELD CORNER, LOWER RH	3-B9
MOULDING, WINDSHIELD CORNER, UPPER LH	3-B9
MOULDING, WINDSHIELD CORNER, UPPER RH	3-B9
MOULDING, WINDSHIELD SIDE, LH	3-B9
MOULDING, WINDSHIELD SIDE, RH	3-B9
MOULDING, WINDSHIELD, LOWER	3-B9
MOULDING, WINDSHIELD, UPPER	3-B9
MUDGUARD SUB-ASSY, FRONT FENDER, LH	3-B2
MUDGUARD SUB-ASSY, FRONT FENDER, RH	3-B2
MUDGUARD SUB-ASSY, QUARTER PANEL, REAR LH	3-I4
MUDGUARD SUB-ASSY, QUARTER PANEL, REAR RH	3-I4
MUDGUARD, QUARTER PANEL, REAR	3-J3
NOZZLE ASSY	1-D9
NOZZLE ASSY, DEFROSTER	3-J2
NOZZLE SUB-ASSY, COWL PANEL WATER EXTRACT	3-L2
NOZZLE, HEADLAMP CLEANER WASHER	4-F4
NOZZLE, OIL	1-B2
	1-M1
NOZZLE, REAR WASHER	4-D4
NOZZLE, SIDE DEFROSTER	3-K2
NOZZLE, SIDE DEFROSTER, LH	3-K2
NOZZLE, SIDE DEFROSTER, RH	3-K2
NOZZLE, SUB-ASSY OIL, NO.1	1-B2
NOZZLE, WINDSHIELD WASHER	4-B4
NUT (FOR BACKING PLATE TO REAR AXLE HOUSING SETTING)	2-K13
NUT (FOR COUNTER GEAR SHAFT)	2-H2
NUT (FOR CRANKSHAFT PULLEY)	1-F3
NUT (FOR DRIVE PINION)	2-L8
NUT (FOR MANUAL TRANSMISSION OUTPUT SHAFT REAR SET)	2-K2
NUT (FOR OUTPUT SHAFT)	2-K4
NUT (FOR REAR WIPER ARM SETTING)	4-L3
NUT (FOR RING PACKING SETTING)	1-D9
NUT (FOR STEERING DAMPER)	2-H12
NUT (FOR TRANSFER OUTPUT SHAFT)	2-G6
NUT (FOR WIPER ARM SETTING)	4-J3
NUT OR COLLAR, PINION STOP, STARTER	1-F8
NUT, ADJUSTING (FOR FLYWEIGHT)	1-E10
NUT, ARM	1-C10
NUT, CAP (FOR CYLINDER HEAD COVER)	1-I1
NUT, CAP (FOR SCREW STOPPER)	1-F10
NUT, CASTLE (FOR FRONT AXLE DRIVE PINION)	2-D10
NUT, CASTLE (FOR TIE ROD END)	2-G12
NUT, CHOKE	3-E10
NUT, CLUTCH RELEASE CYLINDER PUSH ROD	2-B2
NUT, EXHAUST PIPE SET STUD BOLT	1-B6
NUT, FRONT AXLE DIFFERENTIAL BEARING ADJUST	2-D10
NUT, FRONT WHEEL ADJUSTING	2-I10
NUT, GOVERNOR IDLING SPRING SET	1-M9
NUT, HEXAGON (FOR CONNECTING ROD BOLT)	1-E3
NUT, HEXAGON (FOR CROSSSHAFT TO PITMAN ARM SETTING)	2-A11
NUT, HEXAGON (FOR VALVE ADJUSTING)	1-J3
NUT, HEXAGON(FOR SECTOR SHAFT TO PITMAN ARM SETTING)	2-E11
NUT, HUB (FOR AXLE)	2-G9
NUT, LOCK	2-B11
NUT, LOCK, NO.1	2-B11
NUT, NOZZLE RETAINING	1-D?
NUT, OLIVE E (FOR EGR INLET)	1-L11
NUT, REAR AXLE BEARING LOCK	2-F9

PART NAME	LOCATION
NUT, REAR DIFFERENTIAL BEARING ADJUSTING	2-M8
NUT, REAR WIPER LINK PIVOT, NO.1	4-L3
NUT, ROUND	1-D10
NUT, STEERING WHEEL SET	2-F12
NUT, TIMER ROUND	1-G9
NUT, UNION (FOR EGR PIPE, NO.2)	1-B11
NUT, UNION (FOR FUEL PIPE)	1-I8
NUT, UNION (FOR OIL PUMP OUTLET PIPE)	1-A4
NUT, UNION, EGR PIPE, NO.1	1-B11
NUT, WING (FOR AIR CLEANER)	1-F6
NUT, WORM BEARING ADJUSTING SCREW LOCK	2-D11
NUT,CASTLE (FOR RELAY ROD)	2-G12
O, RING	1-D10
OLIVE (FOR FUEL PIPE)	1-I8
OPENER	1-M8
ORNAMENT SUB-ASSY, WHEEL HUB	2-H9
ORNAMENT, FRONT FENDER	3-A9
OUTLET, WATER	1-C5
PACKING	4-H6
PACKING (FOR RADIATOR DRAIN COCK)	1-E5
PACKING, DUST PROOF	1-G7
PACKING, REAR FLOOR SERVICE HOLE	3-I3
PACKING, REAR VIEW OUTSIDE MIRROR STAY	4-A5
PACKING, REAR WIPER PIVOT, NO.1	4-L3
PACKING, TAIL GATE SERVICE HOLE, NO.1	3-B7
PACKING, TAIL GATE SERVICE HOLE, NO.2	3-B7
PACKING, TAIL GATE SERVICE HOLE, NO.3	3-B7
PACKING, TRANSMISSION COVER	3-F3
PACKING, VACUUM PUMP	1-H8
PAD KIT, DISC BRAKE, FRONT	2-I13
PAD, ACCELERATOR PEDAL	3-D10
PAD, BACK DOOR LOCK CONTROL	3-E7
PAD, BACK DOOR LOCK CYLINDER	3-H7
PAD, BRAKE PEDAL	2-K12
PAD, CLUTCH PEDAL	2-E1
PAD, FUEL FILLER LID LOCK CYLINDER	3-H7
PAD, LOCK CYLINDER	3-H7
PAD, REAR SEAT CUSHION SILENCER, A	3-M7
PAD, ROOF HEADLINING CENTER PILLAR	3-H5
PAD, ROOF HEADLINING END	3-H5
PAD, ROOF HEADLINING FRONT PILLAR	3-H5
PAD, ROOF HEADLINING, CENTER	3-H5
PAD, ROOF SILENCER, NO.1	3-G5
PAD, ROOF SILENCER, NO.2	3-G5
PAD, ROOF SILENCER, NO.3	3-G5
PAD, ROOF SILENCER, NO.5	3-G5
PAD, ROOF SILENCER, NO.6	3-G5
PAD, SPRING	2-C15
PAN SUB-ASSY, AUTOMATIC TRANSMISSION OIL	2-M3
PAN SUB-ASSY, OIL	1-B2
PAN, CENTER FLOOR	3-E3
PAN, FRONT FLOOR	3-E3
PAN, REAR FLOOR	3-I3
PANEL ASSY, QUARTER TRIM, CENTER	3-F5
PANEL ASSY, QUARTER TRIM, REAR LH	3-F5
PANEL ASSY, TAIL GATE TRIM	3-A7
PANEL SUB-ASSY, BACK DOOR	3-B7
PANEL SUB-ASSY, BODY LOWER BACK	3-I3
PANEL SUB-ASSY, BODY LOWER BACK, INNER	3-I3
PANEL SUB-ASSY, COWL	3-L2
PANEL SUB-ASSY, COWL SIDE, LH	3-F4
PANEL SUB-ASSY, COWL SIDE, RH	3-F4
PANEL SUB-ASSY, DASH	3-F2
PANEL SUB-ASSY, FRONT DOOR, LH	3-K5

PART NAME	LOCATION
PANEL SUB-ASSY, FRONT DOOR, RH	3-K5
PANEL SUB-ASSY, FRONT END	3-B2
PANEL SUB-ASSY, INSTRUMENT	3-G2
PANEL SUB-ASSY, INSTRUMENT CLUSTER FINISH	3-H2
PANEL SUB-ASSY, REAR DOOR, LH	3-G6
PANEL SUB-ASSY, REAR DOOR, RH	3-G6
PANEL SUB-ASSY, ROOF SIDE, INNER LH	3-H4
PANEL SUB-ASSY, ROOF SIDE, INNER RH	3-H4
PANEL SUB-ASSY, TAIL GATE	3-A7
PANEL, COWL TOP, OUTER	3-L2
PANEL, FRONT DOOR, OUTER LH	3-K5
PANEL, FRONT DOOR, OUTER RH	3-K5
PANEL, INSTRUMENT CLUSTER FINISH, CENTER	3-H2
PANEL, QUARTER WHEEL HOUSE, LH	3-H4
PANEL, QUARTER WHEEL HOUSE, OUTER LH	3-H4
PANEL, QUARTER WHEEL HOUSE, OUTER RH	3-H4
PANEL, QUARTER WHEEL HOUSE, RH	3-H4
PANEL, QUARTER, LH	3-H4
PANEL, QUARTER, RH	3-H4
PANEL, REAR DOOR, OUTER LH	3-G6
PANEL, REAR DOOR, OUTER RH	3-G6
PANEL, REAR FLOOR SIDE, LH	3-I3
PANEL, REAR FLOOR SIDE, RH	3-I3
PANEL, ROCKER, OUTER LH	3-H4
PANEL, ROCKER, OUTER RH	3-H4
PANEL, ROOF	3-L4
PANEL, ROOF SIDE, INNER FRONT LH	3-I4
PANEL, ROOF SIDE, INNER FRONT RH	3-I4
PANEL, ROOF SIDE, OUTER LH	3-I4
PANEL, ROOF SIDE, OUTER RH	3-I4
PANEL, STEREO PLAYER FINISH	3-H2
PANEL, WINDSHIELD HEADER, INNER	3-L4
PAWL, PARKING LOCK	2-L5
PAWL, TILT STEERING	2-F11
PEDAL SUB-ASSY, BRAKE	2-K12
PEDAL SUB-ASSY, CLUTCH	2-E1
PICKUP, TACHOMETER	4-I2
PIECE, BALANCE (FOR PROPELLER SHAFT)	2-H7
PIECE, BALANCE (FOR REAR BRAKE DRUM)	2-E9
PIECE, DISTANCE (FOR NOZZLE)	1-D9
PIECE, DISTRIBUTOR CAP CENTER	1-G7
PIECE, GEAR SPLINE, NO.5	2-K2
PILLAR SUB-ASSY, CENTER BODY, LH	3-G4
PILLAR SUB-ASSY, CENTER BODY, RH	3-G4
PILLAR SUB-ASSY, FRONT BODY OUTER, LH	3-F4
PILLAR SUB-ASSY, FRONT BODY OUTER, RH	3-F4
PILLAR, CENTER BODY INNER UPPER, LH	3-H4
PILLAR, CENTER BODY INNER UPPER, RH	3-H4
PILLAR, CENTER BODY OUTER, LH	3-G4
PILLAR, CENTER BODY OUTER, RH	3-G4
PILLAR, CENTER BODY, INNER LOWER LH	3-H4
PILLAR, CENTER BODY, INNER LOWER RH	3-G4
PILLAR, FRONT BODY, UPPER INNER LH	3-F4
PILLAR, FRONT BODY, UPPER INNER RH	3-F4
PILLAR, QUARTER LOCK, LH	3-H4
PILLAR, QUARTER LOCK, RH	3-H4
PIN	1-F11
PIN (FOR FRONT DOOR CHECK)	3-B6
PIN (FOR HIGH & LOW SHIFT ROD)	2-B7
PIN (FOR PUSH ROD)	2-L12
PIN (FOR REAR DOOR CHECK)	3-I6
PIN (FOR STEERING TILT LEVER)	2-F11
PIN (FOR TRANSMISSION CASE COVER)	2-B3
PIN (FOR 5TH GEAR THRUST WASHER)	2-L2

PART NAME	LOCATION
PIN ASSY, REVERSE RESTRICT	2-D3
PIN KIT, FRONT SPRING	2-I14
PIN KIT, REAR SPRING	2-B15
PIN OR BALL (FOR 1ST GEAR THRUST WASHER)	2-L2
PIN, ACCELERATOR WIRE SET	3-E10
PIN, BRAKE SHAFT LOCK	2-B8
PIN, CLUTCH SHIFT LEVER	2-D8
PIN, CLUTCH SHIFT LEVER LOCK	2-D8
PIN, CONNECTING (FOR FULLROAD STOP CAM)	1-E10
PIN, CYLINDER BLOCK	4-L6
PIN, DIFFERENTIAL PINION SHAFT	2-M8
PIN, FEED PUMP TAPPET ROLLER	1-H10
PIN, FLOAT LEVER	1-B9
PIN, FRONT AXLE DIFFERENTIAL PINION SHAFT	2-D10
PIN, FRONT DIFFERENTIAL PINION SHAFT	2-A10
PIN, GROOVED (FOR DETENT ROD)	2-H3
PIN, LOCATING (FOR 3RD COAST SHIFT)	2-I5
PIN, NOZZLE HOLDER PRESSURE	1-D9
PIN, RING (FOR CRANKSHAFT BEARING CAP SET)	1-M1
PIN, SHIFTING	1-A10
PIN, SHOE HOLD DOWN SPRING (FOR REAR BRAKE)	2-K13
PIN, SLOTTED SPRING (FOR MANUAL VALVE LEVER)	2-L5
PIN, SLOTTED SPRING (FOR POWER TAKE-OFF SHIFT FORK)	2-D6
PIN, SLOTTED SPRING (FOR REVERSE RESTRICT PIN)	2-D3
PIN, SLOTTED SPRING (FOR SHIFT FORK SET)	2-B3
PIN, SLOTTED SPRING (FOR SHIFT FORK)	2-A7
PIN, STARTER DRIVE LEVER SET	1-D8
PIN, STRAIGHT (FOR CAM RING)	2-J11
PIN, STRAIGHT (FOR CLUTCH HOUSING SET)	1-A2
PIN, STRAIGHT (FOR CRANKSHAFT)	1-E3
PIN, STRAIGHT (FOR CYLINDER HEAD SET)	1-A2
PIN, STRAIGHT (FOR ENGINE REAR OIL SEAL)	1-A2
PIN, STRAIGHT (FOR FLYWHEEL)	1-E3
PIN, STRAIGHT (FOR FRONT DRIVE SHIFT LINK LEVER)	2-D7
PIN, STRAIGHT (FOR LOCK UP RELAY VALVE SLEEVE)	2-E5
PIN, STRAIGHT (FOR LOCK UP SIGNAL VALVE)	2-D5
PIN, STRAIGHT (FOR MANUAL TRANSMISSION CASE)	2-G2
PIN, STRAIGHT (FOR OUTER SHAFT FLANGE)	2-H10
PIN, STRAIGHT (FOR REAR AXLE HUB)	2-E9
PIN, STRAIGHT (FOR THROTTLE VALVE SLEEVE)	2-G5
PIN, STRAIGHT (FOR TIMING GEAR CASE)	1-E2
PIN, STRAIGHT (FOR TIMING GEAR COVER SET)	1-A2
PIN, STRAIGHT (FOR TRANSFER ADAPTER)	2-G2
PIN, STRAIGHT (FOR TRANSFER CASE)	2-G6
PIN, STRAIGHT (FOR 1-2 SHIFT VALVE LOW PLUG)	2-G5
PIN, STRAIGHT (FOR 2-3 SHIFT TIMING VALVE PLUG SLEEVE)	2-G5
PIN, STRAIGHT (FOR 2-3 SHIFT VALVE)	2-H5
PIN, THROTTLE VALVE SHAFT	1-F11
PIN, VACUUM PUMP DOWEL, NO.1	1-H8
PIN, W/HOLE (FOR CLUTCH MASTER CYLINDER PUSH ROD CLEVIS)	2-E1
PIN, W/HOLE (FOR DIFFERENTIAL LOCK CABLE LINK)	2-K9
PIN, W/HOLE (FOR DIFFERENTIAL LOCK LEVER)	2-J9
PIN, W/HOLE (FOR DISC BRAKE ANTIRATTLE)	2-I13
PIN, W/HOLE (FOR PARKING BRAKE CABLE)	2-J12
PIN, W/HOLE (FOR POWER TAKE-OFF SHIFT LINK LEVER)	2-D6
PIN, W/HOLE (FOR REAR BRAKE)	2-L13
PIN,STRAIGHT (FOR 1-2 RELAY VALVE)	2-H5
PINION, FRONT AXLE DIFFERENTIAL	2-D10
PINION, PLUNGER CONTROL	1-J9
PINION, REAR DIFFERENTIAL	2-M8
PIPE ASSY, EXHAUST, CENTER	1-B6
PIPE ASSY, EXHAUST, FRONT	1-B6
PIPE ASSY, NOZZLE LEAKAGE	1-D9
PIPE ASSY, NOZZLE LEAKAGE, NO.2	1-E9

PIPE – PLATE

PART NAME	LOCATION
PIPE ASSY, TAIL	1-B6
PIPE OR HOSE SUB-ASSY, CARBURETOR FUEL, NO.1	1-I8
PIPE SUB-ASSY, AIR, NO.1	1-A7
PIPE SUB-ASSY, EGR, NO.1	1-B11
PIPE SUB-ASSY, EGR, NO.2	1-B11
PIPE SUB-ASSY, FUEL TANK INLET	3-L9
PIPE SUB-ASSY, HEATER WATER, A	4-M5
PIPE SUB-ASSY, INJECTION, NO.1	1-G9
PIPE SUB-ASSY, INJECTION, NO.2	1-G9
PIPE SUB-ASSY, INJECTION, NO.3	1-G9
PIPE SUB-ASSY, INJECTION, NO.4	1-G9
PIPE SUB-ASSY, INJECTION, NO.5	1-G9
PIPE SUB-ASSY, INJECTION, NO.6	1-G9
PIPE SUB-ASSY, OIL PUMP OUTLET	1-A4
PIPE SUB-ASSY, OIL, INJECTION PUMP INLET	1-A4
PIPE SUB-ASSY, OIL, INJECTION PUMP OUTLET	1-A4
PIPE SUB-ASSY, VACUUM TRANSMITTING, NO.1	1-A7
PIPE, COOLER REFRIGERANT LIQUID, A (FROM CONDENSER)	4-H6
PIPE, COOLER REFRIGERANT LIQUID, F (FOR COOLER UNIT)	4-H5
PIPE, HEATER WATER INLET, C	4-A6
PIPE, HEATER WATER INLET, D	4-A6
PIPE, HEATER WATER INLET, E (FOR HEATER UNIT)	4-F5
PIPE, HEATER WATER OUTLET, B	4-A6
PIPE, HEATER WATER OUTLET, C	4-A6
PIPE, HEATER WATER OUTLET, D	4-A6
PIPE, HEATER WATER OUTLET, E (FOR HEATER UNIT)	4-F5
PIPE, OIL COOLER	1-H4
PIPE, OIL PUMP OUTLET	1-A4
PIPE, OIL RECEIVER	2-H6
PIPE, RADIATOR	1-F5
PIPE, TAIL GATE PROTECTOR	3-B7
PISTON SUB-ASSY, COOLER COMPRESSOR	4-L6
PISTON SUB-ASSY, FRONT CLUTCH	2-F4
PISTON SUB-ASSY, OVERDRIVE DIRECT CLUTCH	2-C4
PISTON SUB-ASSY, REAR CLUTCH	2-F4
PISTON SUB-ASSY, W/PIN	1-D3
PISTON, ACCUMULATOR, NO.2	2-F5
PISTON, BOOSTER (FOR CLUTCH BOOSTER)	2-K1
PISTON, BRAKE BOOSTER	2-F13
PISTON, BRAKE, NO.1	2-H4
PISTON, C-1 ACCUMULATOR	2-F5
PISTON, C-2 ACCUMULATOR	2-F5
PISTON, FEED PUMP	1-G10
PISTON, FRONT DISC BRAKE	2-I13
PISTON, OVERDRIVE BRAKE	2-D4
PISTON, OVERDRIVE BRAKE ACCUMULATOR	2-D5
PISTON, POWER	1-A9
PISTON, 1ST & REVERSE BRAKE	2-J4
PIVOT, SHIFT ARM	2-B3
PLATE (FOR STARTER YOKE)	1-D6
PLATE & SEAL SUB-ASSY, BOOSTER	2-F13
PLATE ASSY, FRONT DOOR LOCK STRIKER	3-C6
PLATE ASSY, REAR DOOR LOCK STRIKER	3-J6
PLATE SET, VALVE HOLDER LOCK	1-I7
PLATE SUB-ASSY, BATTERY SET	3-J8
PLATE SUB-ASSY, BRAKE BACKING, REAR LH	2-K13
PLATE SUB-ASSY, BRAKE BACKING, REAR RH	2-K13
PLATE SUB-ASSY, COMBINATION METER CIRCUIT, NO.1	4-I2
PLATE SUB-ASSY, FRONT SEAT HINGE, LH	3-J7
PLATE SUB-ASSY, HORN BUTTON CONTACT	2-E12
PLATE SUB-ASSY, SHIFT LEVER	2-G3
PLATE SUB-ASSY, VALVE	4-L6
PLATE, AIR CLEANER CAUTION (FOR ENGINE MODEL)	1-B7
PLATE, BATTERY CAUTION	4-M1

PLATE

PART NAME	LOCATION
PLATE, BEARING RETAINER, ALTERNATOR	1-K7
PLATE, BOOSTER RETAINER	2-F13
PLATE, BRAKE	2-H4
PLATE, BRAKE (FOR OVERDRIVE)	2-D4
PLATE, BRAKE (FOR 1ST & REVERSE BRAKE)	2-J4
PLATE, BRAKE CUSHION	2-J4
PLATE, BUMPER FRONT	2-J14
PLATE, CAMSHAFT SHIM	1-J9
PLATE, CAMSHAFT THRUST	1-I3
PLATE, CAUTION	2-B9 4-M6
PLATE, CAUTION (FOR FUSE)	4-C3
PLATE, CAUTION, NO.1	2-C8
PLATE, CAUTION, NO.2	2-C8
PLATE, CAUTION, NO.3	2-C8
PLATE, CLUTCH	2-A9
PLATE, CLUTCH (FOR OVERDRIVE)	2-C4
PLATE, CLUTCH CUSHION	2-G4
PLATE, CLUTCH PRESSURE	2-B1
PLATE, CONTROL POSITION INDICATOR	2-H3
PLATE, CRANKSHAFT PULLEY, NO.2	1-F3
PLATE, CURRENT SENSOR	4-C3
PLATE, DISTANCE (FOR FRONT)	2-K14
PLATE, DISTANCE (FOR REAR)	2-D15
PLATE, EMISSION CONTROL INFORMATION	1-B7
PLATE, ENGINE CAUTION	1-B7
PLATE, ENGINE CAUTION & ENGINE NAME	1-B7
PLATE, ENGINE CAUTION, NO.2	1-B7
PLATE, ENGINE SERVICE COVER CATCH	3-F3
PLATE, ENGINE VACUUM HOSE INFORMATION	1-B7
PLATE, EXHAUST EMISSION DATA	3-K8
PLATE, FRONT CLUTCH	2-G4
PLATE, FRONT CLUTCH ACCUMULATOR	2-D5
PLATE, FRONT DOOR SCUFF, INSIDE LH	3-D9
PLATE, FRONT DOOR SCUFF, INSIDE RH	3-D9
PLATE, FRONT END	1-E2
PLATE, FUEL CAUTION	3-K8
PLATE, HOOD LOCK AUXILIARY SPRING	3-C2
PLATE, HORN BUTTON CONTACT	2-F12
PLATE, HORN BUTTON CONTACT, NO.2	2-F12
PLATE, HORN CONTACT	4-E3
PLATE, IDLE GEAR THRUST	1-F3
PLATE, LOCK (FOR POWER TAKE-OFF CASE)	2-C6
PLATE, LOCK (FOR TRANSFER GEAR)	2-L6
PLATE, LOCK NUT	2-F9
PLATE, LOCK UP RELAY VALVE BODY	2-E5
PLATE, MAINTENANCE CAUTION	3-K8
PLATE, OFFROAD VEHICLE CAUTION	3-K8
PLATE, POWER STEERING OIL CAUTION	2-L11
PLATE, QUARTER PANEL OR SIDE PANEL NAME (MODEL MARK)	3-A9
PLATE, RADIATOR GRILLE OR FRONT PANEL NAME	3-A9
PLATE, RADIATOR GRILLE PLATE	3-A9
PLATE, RADIO TUNER FINISH	3-I2
PLATE, REAR CLUTCH	2-G4
PLATE, REAR DOOR SCUFF, INSIDE LH	3-D9
PLATE, REAR DOOR SCUFF, INSIDE RH	3-D9
PLATE, REAR END	1-E2
PLATE, REAR NAME, NO.5 (MECHANISM)	3-A9
PLATE, REAR SEAT BACK SET	3-L7
PLATE, REGULATOR COVER	1-K7
PLATE, SAFETY CAUTION	2-D11
PLATE, SIDE, FRONT	2-K11
PLATE, SIDE, REAR	2-K11
PLATE, SNAP RING LOCK	2-K11

PART NAME	LOCATION
PLATE, SPEEDMETER SLEEVE LOCK (ATM)	2-B4
PLATE, SPEEDOMETER SLEEVE LOCK (MTM)	2-H2
PLATE, STARTER LOCK	1-E8
PLATE, STATIONARY, DISTRIBUTOR	1-G7
PLATE, STEERING COLUMN HOLE COVER	2-D11
PLATE, STIFENER, LH (ATM)	2-A4
PLATE, STIFENER, RH (ATM)	2-A4
PLATE, STIFFENER, LH (MTM)	2-G2
PLATE, STIFFENER, RH (MTM)	2-G2
PLATE, TAPPET ADJUSTING SHIM	1-J9
PLATE, THROTTLE VALVE SHAFT STOP	1-F11
PLATE, TRANSFER CAUTION	3-K8
PLATE, TRANSFER DIAPHRAGM	2-D7
PLATE, TRANSMISSION NAME	2-I3
PLATE, VALVE BODY	2-F5
PLATE, VALVE BODY COVER	2-G5
PLATE, VANE PUMP	2-L11
PLATE, VOLTAGE CAUTION	4-F3
PLATE, WATER PUMP	1-J4
PLATE, WIRE LOCK	2-B8
PLIERS	1-B1
PLUG (FOR ACCUMULATOR CONTROL VALVE)	2-I5
PLUG (FOR AUTOMATIC TRANSMISSION CASE)	2-A4
PLUG (FOR CUT BACK VALVE)	2-H5
PLUG (FOR DETENT REGULATOR)	2-G5
PLUG (FOR FRONT AXLE HOUSING)	2-B10
PLUG (FOR FRONT DIFFERENTIAL LOCK CYLINDER)	2-B10
PLUG (FOR FRONT POWER TAKE-OFF DRAIN)	2-C6
PLUG (FOR FUEL TANK)	3-L9
PLUG (FOR INTERMEDIATE MODULATOR VALVE)	2-G5
PLUG (FOR LOW COAST SHIFT VALVE)	2-G5
PLUG (FOR LOW MODULATOR VALVE)	2-G5
PLUG (FOR MANUAL DOWN TIMING VALVE)	2-I5
PLUG (FOR OIL PAN DRAIN)	1-B2
PLUG (FOR OVERDRIVE CLUTCH EXHAUST VALVE)	2-I5
PLUG (FOR REAR AXLE HOUSING FILLER)	2-B9
PLUG (FOR REAR DIFFERENTIAL LOCK CYLINDER)	2-B9
PLUG (FOR REVERSE RESTRICT PIN)	2-D3
PLUG (FOR SECONDARY REGULATOR VALVE)	2-H5
PLUG (FOR STEERING KNUCKLE)	2-E14
PLUG (FOR TRANSFER CASE)	2-G6
PLUG (FOR WATER INLET HOUSING)	1-C5
PLUG (FOR 1-2 RELAY VALVE)	2-H5
PLUG (FOR 1-2 SHIFT VALVE LOW PLUG)	2-G5
PLUG (FOR 2-3 SHIFT VALVE PLUG)	2-G5
PLUG (FOR 2-3 SHIFT VALVE)	2-H5
PLUG (FOR 2ND LOCK VALVE)	2-H5
PLUG (FOR 3-2 KICK DOWN ORIFICE CONTROL VALVE)	2-I5
PLUG (FOR 3-4 SHIFT VALVE)	2-J5
PLUG ASSY, GLOW	1-D7
PLUG SUB-ASSY, ADJUSTER	2-M10
PLUG SUB-ASSY, DRAIN	2-B10
PLUG SUB-ASSY, DRAIN (ATM)	2-M3
PLUG SUB-ASSY, DRAIN (FOR REAR AXLE HOUSING)	2-B9
PLUG SUB-ASSY, DRAIN (MTM)	2-F2
PLUG SUB-ASSY, PRIMARY DOWN SHIFT	2-E5
PLUG SUB-ASSY, SECONDARY DOWN SHIFT	2-E5
PLUG, AIR VENT	1-A11
PLUG, ASSIST GRIP	3-H8
PLUG, AUTOMATIC TRANSMISSION CASE	2-M3
PLUG, BACK DOOR ASSIST GRIP	3-I8
PLUG, BLEEDER	1-A11
PLUG, BLEEDER (FOR DISC BRAKE, FRONT)	2-I13
PLUG, BLEEDER (FOR DRUM BRAKE, REAR)	2-L13

PART NAME	LOCATION
PLUG, BLEEDER (FOR RELEASE CYLINDER)	2-B2
PLUG, BREATHER (ATM)	2-M3
PLUG, BREATHER (FOR TRANSFER CASE)	2-G6
PLUG, DIAPHRAGM HOUSING SEALING SCREW	1-M9
PLUG, DRAIN	2-A8
PLUG, EXPANSION (FOR CAMSHAFT)	1-H3
PLUG, EXPANSION (FOR POWER TAKE-OFF)	2-C6
PLUG, EXPANSION OR TIGHT (FOR TRANSMISSION CASE COVER)	2-B3
PLUG, FEED PUMP CHECK VALVE CHAMBER	1-G10
PLUG, FEED PUMP PISTON CHAMBER	1-H10
PLUG, FILLER	2-A8
PLUG, HOLE (FOR CLUTCH UNDER COVER)	1-F2
PLUG, HOLE (FOR REAR BRAKE)	2-L13
PLUG, HOLE (FOR REAR END PLATE)	1-E2
PLUG, IDLE LIMIT	1-M8
PLUG, INJECTION PUMP FELT PLATE	1-J9
PLUG, LOCK UP SIGNAL VALVE	2-E5
PLUG, MAIN PASSAGE (FOR CARBURETOR JET)	1-B9
PLUG, MANUAL TRANSMISSION CASE	2-F2
PLUG, MASTER CYLINDER FLUID OUTLET	2-A13
PLUG, NO.2	1-I5
PLUG, OIL PUMP RELIEF VALVE	1-A4
PLUG, RADIATOR DRAIN COCK	1-E5
PLUG, SCREW	1-D10 1-F10
PLUG, SHAFT DETENT BALL SPRING	2-A7
PLUG, SPARK	1-D7
PLUG, STEERING GEAR HOUSING OIL	2-E11
PLUG, STRAIGHT (FOR 3RD COAST SHIFT)	2-I5
PLUG, STRAIGHT SCREW (FOR STEERING LINK JOINT)	2-H12
PLUG, STRAIGHT, NO.1	1-I1
PLUG, TIGHT (FOR EXHAUST MANIFOLD)	1-I5
PLUG, TIGHT (FOR WINCH GEAR CASE COVER)	2-A8
PLUG, TIGHT, NO.1	1-I1
PLUG, TIGHT, NO.1 (FOR CYLINDER BLOCK)	1-A2
PLUG, TIGHT, NO.2	1-I1
PLUG, TIGHT, NO.2 (FOR CYLINDER BLOCK)	1-A2
PLUG, TIGHT, NO.3	1-I1
PLUG, TIGHT, NO.3 (FOR CYLINDER BLOCK)	1-A2
PLUG, TIGHT, NO.4	1-I1
PLUG, TIGHT, NO.4 (FOR CYLINDER BLOCK)	1-A2
PLUG, TIGHT, NO.5	1-I1
PLUG, TIGHT, NO.5 (FOR CYLINDER BLOCK)	1-A2
PLUG, W/HEAD STRAIGHT SCREW (FOR POWER TAKE-OFF CACE)	2-C6
PLUG, W/HEAD TAPER SCREW	1-J4
PLUG, W/HEAD TAPER SCREW, NO.1	1-A2 1-I7
PLUG, W/HEAD TAPER SCREW, NO.2	1-A2
PLUG, W/HEAD TAPER SCREW, NO.3	1-A2
PLUG, WATER DRAIN COCK (FOR CYLINDER BLOCK)	1-M1
PLUG, 1-2 SHIFT VALVE LOW	2-G5
PLUG, 2-3 SHIFT TIMING VALVE	2-F5
PLUG, 2-3 SHIFT VALVE	2-G5
PLUNGER, PRIMARY REGULATOR VALVE	2-E5
PLUNGER, PUMP	1-A9
PLUNGER, REVERSE & 5TH SHIFT RETURN	2-C3
PLUNGER, REVERSE SHIFT RETURN	2-B3
PLUNGER, 1ST & 2ND SHIFT RETURN	2-C3
POCKET, CONSOLE BOX	3-D4
POCKET, FRONT DOOR TRIM, LH	3-M5
POCKET, FRONT DOOR TRIM, RH	3-M5
POINTER, TIMING	1-F2
POLE SUB-ASSY, ANTENNA	4-L4
POWER TAKE-OFF ASSY	2-C6

PROTECTOR – REGISTER

PART NAME	LOCATION
PROTECTOR SUB-ASSY, FUEL TANK	3-L9
PROTECTOR, BRAKE TUBE	2-D14
PROTECTOR, EDGE, NO.1	3-H2
PROTECTOR, FUEL FILTER, NO.1	1-A11
PROTECTOR, FUEL FILTER, NO.2	1-A11
PROTECTOR, INTERMEDIATE LINK JOINT, LOWER	2-E11
PROTECTOR, INTERMEDIATE LINK JOINT, UPPER	2-E11
PROTECTOR, QUARTER INNER	3-E9
PROTECTOR, ROOF CARRIER, FRONT BAR	3-L4
PROTECTOR, ROOF CARRIER, REAR BAR	3-L4
PROTECTOR, ROOF CARRIER, SIDE BAR	3-L4
PULLER, FUSE	4-C3
PULLEY ASSY, POWER STEERING IDLE	2-B12
PULLEY, ALTERNATOR	1-M7
PULLEY, COOLER COMPRESSOR IDLE	4-M6
PULLEY, CRANKSHAFT	1-E3
PULLEY, CRANKSHAFT, NO.2	1-F3
PULLEY, FAN	1-K4
PULLEY, PARKING BRAKE SEGMENTAL	2-L13
PULLEY, VANE PUMP	2-I11
PUMP ASSY, AIR	1-H6
PUMP ASSY, FUEL	1-K10
PUMP ASSY, FUEL FEED	1-G10
PUMP ASSY, INJECTION	1-G9
PUMP ASSY, OIL	1-M3
PUMP ASSY, VACUUM	1-H8
PUMP ASSY, VANE	2-I11
PUMP ASSY, WATER	1-J4
PUMP ASSY, WATER, W/O COUPLING	1-J4
PUMP KIT, WATER	1-J4
PUMP SUB-ASSY, PRIMING	1-G10
PUSH ROD SUB-ASSY, BOOSTER	2-F13
RACE SUB-ASSY, CLUTCH, OUTER	2-C8
RACE, GEAR THRUST BEARING	2-D8
RACE, THRUST BEARING (FOR FRONT CLUTCH HUB FRONT)	2-F4
RACE, THRUST BEARING (FOR FRONT CLUTCH HUB REAR)	2-F4
RACE, THRUST BEARING (FOR FRONT OIL PUMP COVER)	2-K3
RACE, THRUST BEARING (FOR INPUT SHAFT FRONT)	2-G4
RACE, THRUST BEARING (FOR INPUT SHAFT REAR)	2-G4
RACE, THRUST BEARING (FOR OVERDRIVE CASE FRONT)	2-C4
RACE, THRUST BEARING (FOR OVERDRIVE PLANETARY GEAR)	2-D4
RACE, THRUST BEARING (FOR REAR CLUTCH DRUM)	2-G4
RACE, THRUST BEARING (FOR REAR PLANETARY FLANGE)	2-L4
RACE, 1 WAY CLUTCH OUTER (FOR OVERDRIVE)	2-D4
RACK, CONTROL	1-I9
RADIATOR ASSY	1-D5
RADIATOR ASSY, HEATER	4-F5
RAIL, ROOF SIDE INNER, LH	3-G4
RAIL, ROOF SIDE, INNER RH	3-G4
RAIL, ROOF SIDE, OUTER LH	3-G4
RAIL, ROOF SIDE, OUTER RH	3-G4
RECEIVER AND DRYER ASSY, COOLER	4-G6
RECEIVER ASSY, RADIO	4-I4
RECEIVER, TRANSFER OIL (FOR TRANSFER IDLER GEAR)	2-J6
RECEIVER, TRANSFER OIL, NO.1	2-H6
RECEIVER, TRANSFER OIL, NO.2	2-H6
RECEPTACLE SUB-ASSY, ASH, NO.1	3-L8
RECEPTACLE SUB-ASSY, ASH, NO.2	3-L8
RECTIFIER ASSY, W/BRUSH	1-M7
REED SUB-ASSY, VALVE	4-L6
REED, SUCTION VALVE	4-L6
REGISTER ASSY, INSTRUMENT PANEL, NO.1	3-I2
REGISTER ASSY, INSTRUMENT PANEL, NO.2	3-I2
REGISTER ASSY, INSTRUMENT PANEL, NO.3	3-J2

REGULATOR – RETAINER

PART NAME	LOCATION
REGULATOR ASSY, GENERATOR	1-A8
REGULATOR SUB-ASSY, FRONT DOOR WINDOW, LH	3-E6
REGULATOR SUB-ASSY, FRONT DOOR WINDOW, RH	3-E6
REGULATOR SUB-ASSY, REAR DOOR WINDOW, LH	3-L6
REGULATOR SUB-ASSY, REAR DOOR WINDOW, RH	3-L6
REINFORCE, TILT STEERING SUPPORT	2-C11
REINFORCEMENT SUB-ASSY, BELT ANCHOR	3-I3
REINFORCEMENT SUB-ASSY, CENTER FLOOR PANEL, LH	3-E3
REINFORCEMENT SUB-ASSY, CENTER FLOOR PANEL, RH	3-E3
REINFORCEMENT SUB-ASSY, DIFFERENTIAL LOCK LEVER SUPPORT	3-A3
REINFORCEMENT SUB-ASSY, FRONT FLOOR	3-E3
REINFORCEMENT SUB-ASSY, ROOF PANEL, CENTER	3-L4
REINFORCEMENT, BACK DOOR OPENING, INNER LH	3-I4
REINFORCEMENT, BACK DOOR OPENING, INNER RH	3-I4
REINFORCEMENT, BACK DOOR OPENING, LOWER LH	3-I4
REINFORCEMENT, BACK DOOR OPENING, LOWER RH	3-I4
REINFORCEMENT, DUST COVER, LH	2-J13
REINFORCEMENT, DUST COVER, RH	2-J13
REINFORCEMENT, FRONT BUMPER	3-K1
REINFORCEMENT, FRONT CROSSMEMBER, LOWER LH	3-B1
REINFORCEMENT, FRONT CROSSMEMBER, LOWER RH	3-B1
REINFORCEMENT, FRONT FLOOR TO BRACE	3-D3
REINFORCEMENT, FRONT FLOOR UNDER	3-D3
REINFORCEMENT, FRONT FLOOR, CENTER	3-E3
REINFORCEMENT, FRONT FLOOR, NO.2 LH	3-D3
REINFORCEMENT, FRONT FLOOR, NO.2 RH	3-D3
REINFORCEMENT, PARKING BRAKE BASE	3-E3
REINFORCEMENT, REAR BUMPER BAR, CENTER	3-L1
REINFORCEMENT, REAR BUMPER, NO.3	3-L1
REINFORCEMENT, REAR FLOOR SIDE MEMBER	3-B3
REINFORCEMENT, REAR SEAT CUSHION HINGE, LH	3-F3
REINFORCEMENT, REAR SEAT CUSHION HINGE, RH	3-E3
REINFORCEMENT, REAR SEAT CUSHION LOCK	3-E3
REINFORCEMENT, WINDSHIELD HEADER INNER PANEL	3-L4
RELAY ASSY (FOR HEATER BLOWER MOTOR)	4-F3
RELAY ASSY, AIR CONTROL	4-I3
RELAY ASSY, CHARGE LAMP	4-B3
RELAY ASSY, COOLER	4-H5
RELAY ASSY, FUEL CONTROL	4-I3
RELAY ASSY, GLOW PLUG	4-B3
RELAY ASSY, HEADLAMP CLEANER CONTROL	4-F4
RELAY ASSY, STARTER	4-B3
RELAY ASSY, TURN SIGNAL CANCELLING	4-G3
RELAY ASSY, WINDSHIELD WIPER	4-G3
RELAY OR COMPUTER ASSY, SEAT BELT WARNING	4-G3
RELAY, COOLING FAN	4-G3
RELAY, FRONT DRIVE	4-G3
RELAY, HEADLAMP DIMMER	4-G3
RELAY, IGNITION CONTROL	4-G3
RELAY, LIGHT CONTROL	4-F3
RELAY, WINDSHIELD WIPER	4-G3
REPLACER, WHEEL CAP	1-C1
RESERVOIR SET, BRAKE MASTER CYLINDER (FOR REAR SIDE)	2-A13
RESERVOIR SUB-ASSY, CLUTCH MASTER CYLINDER	2-H1
RESERVOIR SUB-ASSY, VACUUM	2-G13
RESERVOIR, OIL (FOR VANE PUMP)	2-L11
RESISTOR ASSY, PILOT LAMP	4-F3
RESISTOR, GLOW PLUG	4-B3
RESISTOR, HEATER BLOWER	4-E5
RESISTOR, REAR HEATER BLOWER	4-F5
RETAINER SUB-ASSY, ASH RECEPTACLE, NO.1	3-L8
RETAINER SUB-ASSY, QUARTER VENTILATION LOUVER	3-A5
RETAINER, AIR DUCT	4-J5
RETAINER, BACK DOOR LOCK CYLINDER	3-H7

RETAINER – RING

PART NAME	LOCATION
RETAINER, BACK DOOR WEATHERSTRIP	3-C7
RETAINER, BALL CHECK	1-A9
RETAINER, BEARING, FRONT (MTM)	2-G2
RETAINER, BOOSTER AIR CLEANER	2-F13
RETAINER, BOOSTER PUSH ROD SEAL	2-F13
RETAINER, CABLE	2-J12
RETAINER, CENTER SUPPORT RING	2-I4
RETAINER, CONSOLE BOX	3-E4
RETAINER, CONSOLE COMPARTMENT DOOR STOPPER	3-E4
RETAINER, CUSHION, NO.1 (FOR FRONT SHOCK ABSORBER)	2-K14
RETAINER, CUSHION, NO.1 (FOR FRONT STABILIZER BAR)	2-L14
RETAINER, CUSHION, NO.2 (FOR FRONT SHOCK ABSORBER)	2-K14
RETAINER, CUSHION, NO.2 (FOR FRONT STABILIZER BAR)	2-L14
RETAINER, DIFFERENTIAL LOCK LEVER SUPPORT	3-D3
RETAINER, DOOR LOCK STRIKER PLATE	3-G4
RETAINER, ENGINE REAR OIL SEAL	1-F2
RETAINER, FRONT DIFFERENTIAL LOCK SPRING	2-B10
RETAINER, FUEL FILLER LID CYLINDER	3-H7
RETAINER, HEADLINING SUPPORT	3-I5
RETAINER, INJECTION PUMP	1-G9
RETAINER, OUTER MIRROR	3-K5
RETAINER, OUTPUT SHAFT BEARING, FRONT	2-H6
RETAINER, OUTPUT SHAFT BEARING, REAR NO.1	2-H6
RETAINER, OUTPUT SHAFT REAR BEARING (MTM)	2-G2
RETAINER, OVERDRIVE CASE RING	2-E4
RETAINER, POWER TAKE-OFF BEARING	2-C6
RETAINER, RADIO TUNER OPENING, NO.1	3-H2
RETAINER, REAR ASH RECEPTACLE, INNER	3-L8
RETAINER, REAR ASH RECEPTACLE, OUTER	3-L8
RETAINER, REAR DIFFERENTIAL LOCK SPRING	2-B9
RETAINER, REAR HEATER MOUNTING	3-E3
RETAINER, REAR HOOK	3-E1
RETAINER, ROOF CARRIER, NO.1 LH	3-L4
RETAINER, ROOF CARRIER, NO.1 RH	3-L4
RETAINER, ROOF CARRIER, NO.2	3-M4
RETAINER, ROPE HOOK	3-I3
RETAINER, SHIFT SHAFT	2-A8
RETAINER, SPRING PAD	2-C15
RETAINER, SPRING, LH	2-A9
RETAINER, SPRING, RH	2-A9
RETAINER, STARTER IDLE GEAR	1-F8
RETAINER, TILT LEVER	2-F11
RETAINER, VALVE SPRING	1-I3
RHEOSTAT, LIGHT CONTROL	4-D3
RING (FOR ACCUMULATOR PISTON NO.2)	2-F5
RING (FOR BRAKE MASTER CYLINDER RESERVOIR, NO.1)	2-A13
RING (FOR CLUTCH MASTER CYLINDER RESERVOIR)	2-H1
RING (FOR GOVERNOR BODY SUPPORT)	2-A5
RING (FOR POWER PISTON NUT)	2-B11
RING (FOR POWER STEERING GEAR HOUSING)	2-A11
RING (FOR STEERING MAIN SHAFT)	2-C11
RING (FOR STEERING WORM)	2-M10
RING (FOR VALVE HOUSING)	2-M10
RING O (FOR REAR DIFFERENTIAL LOCK CYLINDER)	2-B9
RING SET, PISTON	1-D3
RING SUB-ASSY, SYNCHRONIZER, NO.1	2-K2
RING, BRAKE SHAFT, O	2-C8
RING, CAM (FOR VANE PUMP)	2-J11
RING, CAMSHAFT ADJUST	1-I9
RING, CIRCULAR INTERNAL	2-F13
RING, CIRCULAR INTERNAL (FOR CLUTCH BOOSTER)	2-L1
RING, CLAMP (FOR DRIVE GEAR)	1-J10
RING, CLUTCH DRUM OIL SEAL	2-L3
RING, CLUTCH DRUM OIL SEAL (FOR OVERDRIVE)	2-D4

RING

PART NAME	LOCATION
RING, CLUTCH OUTER RACE SNAP	2-C8
RING, COMPRESSOR SEAL PLATE SNAP	4-M6
RING, COUNTER GEAR FRONT BEARING SNAP, NO.1	2-M2
RING, DISTRIBUTOR HOUSING O	1-G7
RING, DRIVE SHAFT SNAP	2-H10
RING, E (FOR CLUTCH BOOSTER AIR VALVE)	2-L1
RING, E (FOR CLUTCH HUB SHIFT SHAFT)	2-C8
RING, E (FOR GOVERNOR VALVE SHAFT)	2-M4
RING, E (FOR PRIMARY REGULATOR VALVE)	2-E5
RING, E (FOR PRIMARY THROTTLE VALVE)	2-H5
RING, E (FOR REAR BRAKE)	2-L13
RING, E (FOR REVERSE & 5TH SHIFT HEAD)	2-C3
RING, E (FOR REVERSE SHIFT FORK SHAFT)	2-C3
RING, E (FOR SECONDARY THROTTLE VALVE)	2-I5
RING, E (FOR WINCH INPUT SHAFT)	2-B8
RING, EXHAUST MANIFOLD	1-J5
RING, FEED PUMP TAPPET SNAP	1-H10
RING, FIXED (FOR VANE PUMP)	2-I11
RING, FREE WHEEL HUB	2-I10
RING, HOG, SMALL	3-M7
RING, HOLE SNAP (FOR BRAKE FLANGE NO.1)	2-H4
RING, HOLE SNAP (FOR BRAKE PISTON RETURN SPRING)	2-H4
RING, HOLE SNAP (FOR FRONT PLANETARY RING GEAR)	2-L4
RING, HOLE SNAP (FOR OUTPUT SHAFT)	2-K4
RING, HOLE SNAP (FOR OVERDRIVE BRAKE FLANGE)	2-D4
RING, HOLE SNAP (FOR OVERDRIVE BRAKE RETURN SPRING)	2-D4
RING, HOLE SNAP (FOR OVERDRIVE CASE)	2-C4
RING, HOLE SNAP (FOR OVERDRIVE CLUTCH FLANGE)	2-D4
RING, HOLE SNAP (FOR OVERDRIVE PLANETARY RING GEAR)	2-D4
RING, HOLE SNAP (FOR PISTON PIN)	1-D3
RING, HOLE SNAP (FOR POWER STEERING GEAR HOUSING)	2-A11
RING, HOLE SNAP (FOR PUMP HOUSING OIL SEAL)	2-H11
RING, HOLE SNAP (FOR REAR CLUTCH FLANGE)	2-G4
RING, HOLE SNAP (FOR REAR CLUTCH HUB)	2-G4
RING, HOLE SNAP (FOR REAR PLANETARY RING GEAR FLANGE)	2-L4
RING, HOLE SNAP (FOR SPIDER BEARING)	2-I7
RING, HOLE SNAP (FOR STEERING MAIN SHAFT)	2-C11
RING, HOLE SNAP (FOR 1 WAY CLUTCH)	2-D4
	2-L4
RING, HOLE SNAP (FOR 1ST & REVERSE BRAKE FLANGE)	2-J4
RING, HORN CONTACT	2-F12
RING, INPUT SHAFT OIL SEAL	2-G4
RING, INTERMEDIATE SHAFT OIL SEAL	2-L4
RING, O	1-G4
	1-G9
RING, O (FOR ADJUSTER PLUG)	2-B11
RING, O (FOR AIR VENT PLUG)	1-A11
RING, O (FOR ATM SPEEDMETER SHAFT SLEEVE)	2-B4
RING, O (FOR AUTOMATIC TRANSMISSION CASE)	2-A4
RING, O (FOR BPAKE PISTON INNER)	2-H4
RING, O (FOR BRAKE PISTON OUTER)	2-H4
RING, O (FOR BREATHER PLUG)	2-M3
RING, O (FOR C-1 ACCUMULATOR PISTON)	2-F5
RING, O (FOR C-2 ACCUMULATOR PISTON)	2-F5
RING, O (FOR CENTER SUPPORT)	2-I4
RING, O (FOR CLUTCH HUB SHIFT SHAFT)	2-C8
RING, O (FOR COUNTER SHAFT)	2-B8
RING, O (FOR DIAPHRAGM PUSH ROD)	2-D7
RING, O (FOR FLOW CONTROL SPRING SEAT)	2-K11
RING, O (FOR FRONT CLUTCH PISTON)	2-F4
RING, O (FOR FRONT DIFFERENTIAL LOCK CYLINDER)	2-A10
RING, O (FOR FRONT OIL PUMP BODY)	2-K3
RING, O (FOR FRONT POWER TAKE-OFF SHAFT)	2-D6
RING, O (FOR FUEL FEED PUMP)	1-G10

PART NAME	LOCATION
RING, O (FOR FULLROAD STOPPER HOUSING)	1-C10
RING, O (FOR MTM SPEEDOMETER SHAFT SLEEVE)	2-H2
RING, O (FOR NO.3 LEVER)	1-M9
RING, O (FOR OIL COOLER TUBE UNION)	2-M5
RING, O (FOR OVERDRIVE BRAKE ACCUMULATOR PISTON)	2-D5
RING, O (FOR OVERDRIVE BRAKE PISTON)	2-D4
RING, O (FOR OVERDRIVE CASE)	2-C4
RING, O (FOR OVERDRIVE DIRECT CLUTCH PISTON)	2-C4
RING, O (FOR POWER PISTON NUT)	2-B11
RING, O (FOR POWER STEERING GEAR HOUSING)	2-M10
RING, O (FOR POWER TAKE-OFF REVERSE IDLER SHAFT)	2-C6
RING, O (FOR PRESSURE PORT UNION)	2-K11
RING, O (FOR PUMP HOUSING)	2-H11
RING, O (FOR REAR CLUTCH PISTON)	2-F4
RING, O (FOR REAR SIDE PLATE)	2-K11
RING, O (FOR RESERVOIR TUBE)	2-A13
RING, O (FOR SHIFT ARM PIVOT)	2-B3
RING, O (FOR SIDE COVER)	2-A11
RING, O (FOR SOLENOID VALVE)	1-B9
RING, O (FOR STEERING MAIN SHAFT)	2-C11
RING, O (FOR STEERING WORM)	2-M10
RING, O (FOR STOPPER LEVER)	1-C10
RING, O (FOR SUCTION PORT UNION)	2-J11
RING, O (FOR TRANSFER IDLER SHAFT)	2-K6
RING, O (FOR TRANSFER INPUT GEAR)	2-J6
RING, O (FOR TRANSMISSION OIL FILLER TUBE)	2-A4
RING, O (FOR VALVE HOUSING)	2-M10
RING, O (FOR VANE PUMP HOUSING SET BOLT)	2-J11
RING, O (FOR VANE PUMP OIL RESERVOIR)	2-L11
RING, O (FOR WINCH GEAR CASE COVER)	2-A8
RING, O (FOR WINCH MOTOR)	2-E8
RING, O (FOR 1ST & REVERSE BRAKE)	2-J4
RING, OIL SEAL (FOR CENTER SUPPORT)	2-I4
RING, OIL SEAL (FOR OVERDRIVE PLANETARY RING GEAR FLANGE)	2-D4
RING, PISTON	4-L6
RING, SEALED BEAM MOUNTING, NO.1 LH	4-A1
RING, SEALED BEAM MOUNTING, NO.1 RH	4-A1
RING, SEALED BEAM RETAINING	4-A1
RING, SET (FOR FRONT DISC BRAKE PISTON)	2-I13
RING, SET (FOR RELAY ROD)	2-G12
RING, SHAFT SNAP	2-I11
RING, SHAFT SNAP (FOR CLUTCH HUB SET)	2-K2
RING, SHAFT SNAP (FOR FRONT BEARING)	2-K2
RING, SHAFT SNAP (FOR FRONT CLUTCH PISTON RETURN SPRING)	2-F4
RING, SHAFT SNAP (FOR FRONT DOOR WINDOW REGULATOR HANDLE)	3-E6
RING, SHAFT SNAP (FOR FRONT DRIVE INNER SHAFT INNER)	2-G10
RING, SHAFT SNAP (FOR FRONT DRIVE INNER SHAFT OUTER)	2-G10
RING, SHAFT SNAP (FOR FRONT PLANETARY SUN GEAR)	2-H4
RING, SHAFT SNAP (FOR OUTPUT SHAFT REAR BEARING)	2-D6
RING, SHAFT SNAP (FOR OVERDRIVE DIRECT CLUTCH RETURN SPRING)	2-D4
RING, SHAFT SNAP (FOR REAR CLUTCH PISTON RETURN SPRING)	2-G4
RING, SHAFT SNAP (FOR REAR DOOR WINDOW REGULATOR HANDLE)	3-L6
RING, SHAFT SNAP (FOR REAR PLANETARY RING GEAR)	2-L4
RING, SHAFT SNAP (FOR REVERSE & 5TH SHIFT RETURN PLUNGER)	2-C3
RING, SHAFT SNAP (FOR SHIFT ARM SHOE)	2-B3
RING, SHAFT SNAP (FOR STEERING MAIN SHAFT)	2-C11
RING, SHAFT SNAP (FOR TRANSFER OUTPUT SHAFT)	2-K6
RING, SHAFT SNAP (FOR 1ST & REVERSE BRAKE RETURN SPRING)	2-J4
RING, SHAFT SNAP (FOR 1ST & 2ND SHIFT RETURN PLUNGER)	2-C3
RING, SHAFT SNAP (FOR 3RD & 4TH SHIFT FORK SHAFT)	2-C3
RING, SNAP (FOR ALTERNATOR ROTOR)	1-L7
RING, SNAP (FOR BRAKE MASTER CYLINDER SIDE)	2-A13
RING, SNAP (FOR FLOW CONTROL VALVE)	2-J11
RING, SNAP (FOR GOVERNOR VALVE SHAFT NO.2)	2-A5

PART NAME	LOCATION
RING, SNAP (FOR GOVERNOR WEIGHT)	1-G7
RING, SNAP (FOR MAGNET CLUTCH)	4-M6
RING, SNAP (FOR PARKING LOCK PAWL SHAFT)	2-L5
RING, SNAP (FOR STARTER PINION STOP NUT)	1-F8
RING, SNAP (FOR STEERING COLUMN TUBE)	2-C11
RING, SNAP (FOR TRANSFER OUTPUT FRONT BEARING)	2-K6
RING, SNAP CAMSHAFT (FOR TIMING GEAR)	1-I3
RING, SNAP, COUNTER GEAR REAR BEARING	2-M2
RING, SNAP, NO.1 (FOR CARBURETOR LINK)	1-B9
RING, SPACE (FOR ALTERNATOR ROTOR)	1-K7
RING, SYNCHRONIZER, NO.2	2-L2
RING, SYNCHRONIZER, NO.3	2-L2
ROD ASSY, ACCELERATOR PEDAL	3-D10
ROD ASSY, HIGH AND LOW SHIFT, NO.2	2-B7
ROD ASSY, STEERING RELAY	2-G12
ROD ASSY, TIE	2-H12
ROD SUB-ASSY, ACCELERATOR CONNECTING, NO.1	3-D10
ROD SUB-ASSY, ACCELERATOR CONNECTING, NO.2	3-D10
ROD SUB-ASSY, ACCELERATOR CONNECTING, NO.3	3-D10
ROD SUB-ASSY, BOOSTER PISTON (FOR CLUTCH BOOSTER)	2-K1
ROD SUB-ASSY, CONNECTING	1-D3
ROD SUB-ASSY, DIFFERENTIAL LOCK CABLE LINK	2-J9
ROD SUB-ASSY, HIGH & LOW SHIFT	2-A7
ROD SUB-ASSY, JACK HANDLE	1-B1
ROD SUB-ASSY, PARKING LOCK	2-L5
ROD SUB-ASSY, THROTTLE LINK CONNECTING, 1ST	2-L5
ROD, CLUTCH MASTER CYLINDER PUSH	2-H1
ROD, CLUTCH RELEASE CYLINDER PUSH, NO.1	2-B2
ROD, CLUTCH RELEASE CYLINDER PUSH, NO.2	2-B2
ROD, DETENT	2-H3
ROD, DIFFERENTIAL LOCK, NO.1	2-J9
ROD, DIFFERENTIAL LOCK, NO.2	2-J9
ROD, FUEL CONTROL MOTOR	4-I3
ROD, HOOD SUPPORT	3-C2
ROD, REAR SEAT BACK LOCK	3-D8
ROD, TRANSMISSION CONTROL (FOR FLOOR SHIFT)	2-H3
ROD, VALVE PUSH	1-J3
ROLLER OR BEARING, INPUT SHAFT NEEDLE	2-K2
ROLLER SUB-ASSY, WINCH WIRE GUIDE	2-D8
ROLLER, FEED PUMP TAPPET	1-H10
ROLLER, NO.1 (FOR SHIFT INTER LOCK)	2-D3
ROLLER, NO.2 (FOR INTER LOCK)	2-D3
ROLLER, STARTER IDLE GEAR CLUTCH	1-F8
ROLLER, WINCH WIRE GUIDE, NO.2	2-D8
ROTOR ASSY, ALTERNATOR	1-L7
ROTOR KIT, WATER PUMP	1-K4
ROTOR SUB-ASSY, DISTRIBUTOR	1-G7
ROTOR SUB-ASSY, MAGNET CLUTCH	4-K6
ROTOR, DISTRIBUTOR, SIGNAL	1-G7
ROTOR, VANE PUMP	2-I11
ROTOR, WATER PUMP	1-K4
RUBBER (FOR STARTER BEARING COVER)	1-E8
RUBBER (FOR STARTER YOKE)	1-D8
RUBBER, REAR WIPER	4-M3
RUBBER, WINDSHIELD WIPER	4-K3
RUN, FRONT DOOR GLASS	3-A6
RUN, FRONT DOOR GLASS, LOWER	3-A6
RUN, REAR DOOR GLASS	3-I6
SAFETY PAD SUB-ASSY, INSTRUMENT PANEL, UPPER	3-H2
SCREW (FOR CHOKE LEVER ADAPTOR SET)	1-B9
SCREW (FOR WINCH CONTROL SWITCH)	2-F8
SCREW OR BOLT (FOR VALVE ROCKER SHAFT LOCK)	1-J3
SCREW, ADAPTER (FOR SLIDING BLOCK)	1-D10
SCREW, ADJUSTING	1-M8

PART NAME	LOCATION
SCREW, BEARING LOCK NUT	2-F9
SCREW, CLOCK	4-J2
SCREW, CROSSSHAFT ADJUSTING	2-B11
SCREW, DIAPHRAGM HOUSING SET	1-A10
SCREW, FUEL PIPE FOLLOW	1-H10
SCREW, FUEL PIPE HOLLOW	1-A11
SCREW, HEADLAMP ADJUSTING	4-A1
SCREW, IDLE ADJUSTING	1-M8
SCREW, PLUNGER CONTROL PINION CLAMP	1-J9
SCREW, POWER PISTON STOP	1-B9
SCREW, PUMP ARM SET	1-B9
SCREW, RACK GUIDE	1-I9
SCREW, SECTOR SHAFT ADJUSTING	2-C11
SCREW, SET (FOR CARBURETOR LEVEL GAGE CLAMP SET)	1-B9
SCREW, SET, NO.2 (FOR CARBURETOR BODY SET)	1-B9
SCREW, STOP	1-D10
SCREW, STOP PLATE ADJUSTING	1-F11
SCREW, STOPPER	1-F10
SCREW, TAIL GATE ASSY	3-D7
SCREW, THROTTLE ADJUSTING	1-M8
SCREW, VALVE ADJUSTING	1-J3
SCREW, WORM BEARING ADJUSTING	2-D11
SCREW, 1ST THROTTLE ADJUSTING	1-M8
SEAL ASSY, COOLER COMPRESSOR SHAFT	4-M6
SEAL OR RING, O (FOR VALVE STEM OIL)	1-I3
SEAL SET, WATER PUMP	1-J4
SEAL SUB-ASSY, STEERING KNUCKLE OIL	2-E14
SEAL, BACK DOOR HINGE	3-D7
SEAL, BOOSTER BODY	2-F13
SEAL, BOOSTER BODY NO.1 (FOR CLUTCH BOOSTER)	2-L1
SEAL, DUST (FOR FRONT AXLE HUB)	2-F14
SEAL, DUST (FOR FRONT POWER TAKE-OFF SHAFT)	2-D6
SEAL, DUST (FOR RELAY ROD)	2-G12
SEAL, ENGINE REAR OIL	1-F2
SEAL, FRONT DOOR FRONT LOWER FRAME, LH	3-K5
SEAL, FRONT DOOR FRONT LOWER FRAME, RH	3-K5
SEAL, FRONT FENDER APRON, RH	3-E2
SEAL, GEAR CASE COVER OIL	2-C8
SEAL, GEAR CASE OIL	2-C8
SEAL, HOOD TO RADIATOR SUPPORT	3-A2
SEAL, LEAD	1-A10 1-C10 1-E11
SEAL, MAIN SHAFT LOWER DUST	2-E11
SEAL, OIL (FOR ADJUSTER PLUG)	2-B11
SEAL, OIL (FOR ADJUSTING LEVER)	1-D10
SEAL, OIL (FOR ATM SPEEDMETER SHAFT SLEEVE)	2-B4
SEAL, OIL (FOR CRANKSHAFT)	1-E3
SEAL, OIL (FOR FRONT AXLE HUB)	2-H10
SEAL, OIL (FOR FRONT OIL PUMP)	2-K3
SEAL, OIL (FOR HIGH & LOW SHIFT INNER LEVER)	2-A7
SEAL, OIL (FOR MANUAL VALVE LEVER SHAFT)	2-L5
SEAL, OIL (FOR NO.3 LEVER)	1-A10
SEAL, OIL (FOR OUTPUT SHAFT BEARING FRONT RETAINER)	2-H6
SEAL, OIL (FOR OUTPUT SHAFT RETAINER)	2-H6
SEAL, OIL (FOR POWER STEERING GEAR HOUSING)	2-A11
SEAL, OIL (FOR POWER TAKE-OFF BEARING RETAINER)	2-C6
SEAL, OIL (FOR REAR AXLE HUB)	2-F9
SEAL, OIL (FOR REAR AXLE SHAFT OUTER)	2-E9
SEAL, OIL (FOR REAR AXLE SHAFT)	2-E9
SEAL, OIL (FOR REAR DIFFERENTIAL CARRIER)	2-K8
SEAL, OIL (FOR SECTOR SHAFT)	2-E11
SEAL, OIL (FOR STEERING WORM)	2-C11
SEAL, OIL (FOR TIMING GEAR COVER)	1-E2

PART NAME	LOCATION
SEAL, OIL (FOR TRANSFER ADAPTER)	2-G2
SEAL, OIL (FOR TRANSFER CASE)	2-G6
SEAL, OIL (FOR TRANSFER FRONT DRIVE SHIFT SHAFT)	2-A7
SEAL, OIL (FOR TRANSMISSION FRONT BEARING RETAINER)	2-G2
SEAL, OIL (FOR 5TH SHIFT ARM SHAFT)	2-C3
SEAL, REAR DOOR DIVISION BAR	3-H6
SEAL, ROOF CARRIER, NO.1 SUPPORT	3-L4
SEAL, ROOF CARRIER, NO.2 SUPPORT	3-L4
SEAL, ROOF CARRIER, NO.3 SUPPORT	3-L4
SEAL, TYPE S OIL (FOR PUMP HOUSING)	2-H11
SEAL, TYPE S OIL (FOR SPEEDOMETER SHAFT SLEEVE)	2-H2
SEAL, TYPE T OIL (FOR FRONT AXLE DIFFERENTIAL CARRIER)	2-F10
SEAL, TYPE T OIL (FOR FRONT DRIVE SHAFT)	2-B10
SEAL, TYPE T OIL (FOR PUMP HOUSING)	2-H11
SEAL, TYPE T, OIL (FOR DIAPHRAGM PUSH ROD)	2-D7
SEAL, VACUUM PUMP OIL	1-H8
SEAL,MAIN SHAFT UPPER DUST	2-D11
SEALED BEAM UNIT, NO.1	4-A1
SEAT SUB-ASSY, SPRING U BOLT, LH	2-A15
SEAT SUB-ASSY, SPRING U BOLT, RH	2-A15
SEAT, BALL STUD	2-H12
SEAT, CHECK VALVE SPRING	2-L3
SEAT, FLOW CONTROL SPRING	2-K11
SEAT, FRONT CLUTCH PISTON RETURN SPRING	2-F4
SEAT, FRONT SPRING, LH	2-K14
SEAT, FRONT SPRING, RH	2-K14
SEAT, INJECTION NOZZLE	1-D9
SEAT, LOCK UP SIGNAL VALVE SPRING	2-E5
SEAT, OVERDRIVE DIRECT CLUTCH RETURN SPRING	2-D4
SEAT, PRIMARY REGULATOR VALVE SLEEVE	2-F5
SEAT, REAR CLUTCH PISTON RETURN SPRING	2-G4
SEAT, SHIFT DETENT BALL SPRING, NO.2	2-D3
SEAT, SPRING (FOR FLYWEIGHT)	1-D10
SEAT, SPRING (FOR TIMER SPRING)	1-J10
SEAT, SPRING (FOR VANE PUMP)	2-K11
SEAT, SPRING INNER	1-D10
SEAT, SPRING UPPER	1-I9
SEAT, SPRING, LOWER	1-I9
SEAT, STEERING LINK JOINT SPRING	2-H12
SEAT, TRANSMISSION SHIFT LEVER BALL	2-H3
SEAT, UNION (FOR PRESSURE PORT UNION)	2-K11
SEAT, UNION (FOR VALVE BODY HOUSING)	2-M10
SEAT, VALVE EXHAUST	1-I1
SEAT, VALVE INTAKE	1-I1
SEAT, VALVE SPRING	1-I3
SEAT, WATER PUMP PULLEY	1-K4
SEDIMENTER ASSY, FUEL	1-A11
SENSOR, EXHAUST GAS TEMPERATURE	4-G3
SENSOR, GLOW PLUG CURRENT	4-C3
SENSOR, MANIFOLD TEMPERATURE	4-G3
SENSOR, TEMPERATURE	4-G3
SEPARATOR SUB-ASSY, FUEL EVAPORATIVE	3-L9
SEPARATOR, AIR CLEANER (FOR CLUTCH BOOSTER)	2-L1
SET PLATE, REAR FLOOR CARPET, NO.1	3-M3
SET PLATE, REAR FLOOR MAT, REAR	3-M3
SHACKLE	1-D10
SHACKLE KIT, FRONT SPRING	2-I14
SHACKLE KIT, REAR SPRING	2-B15
SHADE, FRONT TURN SIGNAL LAMP, LH	4-D1
SHADE, FRONT TURN SIGNAL LAMP, RH	4-C1
SHADE, REAR COMBINATION LAMP, NO.1 LH	4-G1
SHADE, REAR COMBINATION LAMP, NO.1 RH	4-F1
SHADE, REAR COMBINATION LAMP, NO.2 LH	4-G1
SHADE, REAR COMBINATION LAMP, NO.2 RH	4-F1

PART NAME	LOCATION
SHAFT ASSY, PROPELLER	2-I7
SHAFT ASSY, PROPELLER, FRONT	2-I7
SHAFT ASSY, STEERING INTERMEDIATE, NO.2	2-D11
SHAFT SUB-ASSY, IDLE GEAR	1-F3
SHAFT SUB-ASSY, INPUT	2-G4
SHAFT SUB-ASSY, MANIFOLD HEAT CONTROL	1-J5
SHAFT SUB-ASSY, OUTPUT	2-K4
SHAFT SUB-ASSY, STEERING INTERMEDIATE, NO.2	2-C11
SHAFT SUB-ASSY, STEERING MAIN	2-C11
SHAFT SUB-ASSY, THROTTLE CAM	2-L5
SHAFT SUB-ASSY, VALVE ROCKER, NO.1	1-J3
SHAFT SUB-ASSY, W/ROTOR	2-H11
SHAFT, CHOKE	1-A9
SHAFT, CLUTCH HUB SHIFT	2-C8
SHAFT, CLUTCH PEDAL	2-E1
SHAFT, CLUTCH SHIFT LEVER	2-D8
SHAFT, CONTROL (FOR FLOOR SHIFT)	2-G3
SHAFT, CROSS	2-A11
SHAFT, DIFFERENTIAL LOCK CABLE LINK	2-K9
SHAFT, DIFFERENTIAL LOCK CONTROL, FRONT	2-J9
SHAFT, DIFFERENTIAL LOCK CONTROL, REAR	2-J9
SHAFT, DIFFERENTIAL LOCK LINK	2-J9
SHAFT, DRIVE	2-G10
SHAFT, FRONT AXLE DIFFERENTIAL PINION	2-D10
SHAFT, FRONT AXLE, INNER LH	2-G10
SHAFT, FRONT AXLE, INNER RH	2-G10
SHAFT, FRONT DRIVE SHIFT LINK SUPPORT	2-B7
SHAFT, GOVERNOR	1-G7
SHAFT, GOVERNOR VALVE, NO.1	2-M4
SHAFT, GOVERNOR VALVE, NO.2	2-A5
SHAFT, IDLE GEAR, NO.1	1-F3
SHAFT, IDLE GEAR, NO.2	1-F3
SHAFT, INPUT	2-K2
SHAFT, INTERMEDIATE	2-K4
SHAFT, LEVER SUPPORTING	1-D10
SHAFT, MANUAL VALVE LEVER	2-L5
SHAFT, OIL PUMP	1-A4
SHAFT, OIL PUMP DRIVEN	1-A4
SHAFT, OUTPUT	2-K2
SHAFT, PARKING LOCK PAWL	2-L5
SHAFT, PEDAL	2-K12
SHAFT, POWER TAKE-OFF IDLER GEAR	2-C6
SHAFT, POWER TAKE-OFF INPUT GEAR	2-C6
SHAFT, POWER TAKE-OFF OUTPUT	2-C6
SHAFT, POWR TAKE-OFF FORK, NO.1	2-D6
SHAFT, REAR AXLE	2-E9
SHAFT, REAR DIFFERENTIAL PINION	2-M8
SHAFT, REVERSE IDLER GEAR	2-M2
SHAFT, REVERSE SHIFT FORK	2-C3
SHAFT, SHIFT & SELECT LEVER	2-D3
SHAFT, SLIDING BLOCK	1-E10
SHAFT, SLIDING WEIGHT	1-E10
SHAFT, SPRAIN	1-J9
SHAFT, STEERING SECTOR	2-E11
SHAFT, TRANSFER FRONT DRIVE SHIFT	2-A7
SHAFT, TRANSFER HIGH AND LOW SHIFT FORK	2-A7
SHAFT, TRANSFER IDLER GEAR	2-K6
SHAFT, TRANSFER OUTPUT, FRONT	2-K6
SHAFT, TRANSFER OUTPUT, REAR	2-K6
SHAFT, TRANSFER SHIFT LEVER	2-B7
SHAFT, VANE PUMP	2-I11
SHAFT, VENTURI THROTTLE VALVE	1-F11
SHAFT, WINCH BRAKE	2-D8
SHAFT, WINCH INPUT	2-B8
SHAFT, WINCH ROLLER	2-D8
SHAFT, WINCH ROLLER, NO.2	2-D8
SHAFT, 1ST & 2ND SHIFT FORK	2-C3
SHAFT, 3RD & 4TH SHIFT FORK	2-C3
SHAFT, 5TH SHIFT ARM	2-C3
SHAFT, 5TH SHIFT FORK	2-C3
SHEET, HEATER CONTROL NAME	4-K2
SHIELD, FUEL FILLER PIPE	3-A10
SHIELD, STEERING COLUMN HOLE	2-D11
SHIM (FOR DRIVE PINION SPACER FRONT ADJUST)	2-L8
SHIM (FOR DRIVE PINION SPACER REAR ADJUST)	2-L8
SHIM (FOR THROTTLE VALVE CAM)	2-J5
SHIM (FOR TRANSFER OUTPUT SHAFT)	2-K6
SHIM, BACK DOOR STOPPER	3-E7
SHIM, CYLINDER LINER	1-B2
SHIM, FRONT AXLE DRIVE PINION SPACER FRONT ADJUST	2-F10
SHIM, FRONT AXLE DRIVE PINION SPACER REAR ADJUST	2-E10
SHIM, MAIN SPRING	1-A10
SHIM, STEERING KNUCKLE ADJUST, NO.1	2-E14
SHIM, TILT STEERING SUPPORT	2-F11
SHOE KIT, REAR BRAKE	2-K13
SHOE, FR DRIVE SHIFT LINK LEVER (FOR VACUUM MAGNET TYPE)	2-D7
SHOE, FRONT DRIVE SHIFT LINK LEVER (FOR DIRECT TYPE)	2-B7
SHOE, PISTON	4-L6
SHOE, SHIFT ARM	2-B3
SHROUD SUB-ASSY, FAN	1-F5
SHUTTER SUB-ASSY, RADIATOR WIND	3-E2
SILENCER, FRONT DOOR LOCK LINK	3-D6
SILENCER, FRONT SPRING	2-J14
SILENCER, REAR DOOR LOCK LINK	3-K6
SILENCER, REAR SPRING	2-C15
SLEEVE SUB-ASSY, SPEEDMETER SHAFT (ATM)	2-B4
SLEEVE SUB-ASSY, SPEEDOMETER SHAFT (MTM)	2-H2
SLEEVE, BALL (FOR EGR INLET)	1-B11
SLEEVE, BALL (FOR EGR PIPE, NO.2)	1-B11
SLEEVE, BALL (FOR OIL PUMP OUTLET PIPE)	1-A4
SLEEVE, BALL, EGR PIPE, NO.1	1-B11
SLEEVE, FRONT DIFFERENTIAL LOCK	2-A10
SLEEVE, FRONT DRIVE CLUTCH	2-K6
SLEEVE, LOCK UP RELAY VALVE, NO.1	2-E5
SLEEVE, LOCK UP RELAY VALVE, NO.2	2-E5
SLEEVE, PLUNGER CONTROL	1-I9
SLEEVE, PRIMARY REGULATOR VALVE	2-E5
SLEEVE, REAR DIFFERENTIAL LOCK	2-A9
SLEEVE, SHIFT LEVER KNOB	2-H3
SLEEVE, THROTTLE VALVE, NO.1	2-G5
SLEEVE, THROTTLE VALVE, NO.2	2-H5
SLEEVE, TRANSFER HIGH AND LOW CLUTCH	2-K6
SLEEVE, TRANSMISSION HUB, NO.2	2-L2
SLEEVE, TRANSMISSION HUB, NO.3	2-L2
SLEEVE, 2-3 SHIFT TIMING VALVE PLUG	2-G5
SLIDER (FOR SPEED CONTROL)	1-A10 1-E10
SLINGER, FRONT AXLE DRIVE PINION OIL	2-F10
SLINGER, REAR DIFFERENTIAL DRIVE PINION OIL	2-L8
SLIPPER, VANE PUMP	2-K11
SNAP (FOR REAR DOOR INSIDE HANDLE)	3-J6
SNAP, DOOR INSIDE HANDLE ROD	3-C6
SOCKET AND WIRE SUB-ASSY, REAR SIDE MARKER LAMP	4-I1
SOCKET SUB-ASSY, COMBINATION METER BULB	4-I2
SOCKET SUB-ASSY, INSPECTION LAMP, NO.1	4-C3
SOCKET SUB-ASSY, SPEEDOMETER BULB	4-I2
SOLENOID ASSY, FRONT DRIVE	4-F3
SOLENOID, THROTTLE VALVE	1-B9

SPACER – SPRING

PART NAME	LOCATION
SPACER (FOR BODY MOUNT NO.1 CUSHION)	3-H1
SPACER (FOR BODY MOUNT NO.2 CUSHION)	3-H1
SPACER (FOR BODY MOUNT NO.3 CUSHION)	3-H1
SPACER (FOR BODY MOUNT NO.4 CUSHION)	3-H1
SPACER (FOR BODY MOUNT NO.5 CUSHION)	3-I1
SPACER (FOR BODY MOUNT NO.6 CUSHION)	3-I1
SPACER (FOR GOVERNOR VALVE NO.2)	2-M4
SPACER (FOR HIGH & LOW SHIFT ROD)	2-B7
SPACER (FOR MANUAL VALVE LEVER)	2-L5
SPACER (FOR OUTPUT SHAFT	2-K4
SPACER (FOR OUTPUT SHAFT REAR BEARING)	2-K4
SPACER (FOR OUTPUT SHAFT)	2-K2
SPACER (FOR POWER TAKE-OFF OUTPUT GEAR)	2-C6
SPACER (FOR POWER TAKE-OFF OUTPUT SHAFT BEARING)	2-D6
SPACER (FOR TRANSFER OUTPUT SHAFT)	2-K6
SPACER OR WASHER, FRONT AXLE DRIVE PINION THRUST	2-E10
SPACER, CLUTCH DISC	2-D8
SPACER, CONSOLE COMPARTMENT DOOR STOPPER	3-D4
SPACER, DIFFERENTIAL PINION SHAFT	2-A9
SPACER, DRIVE PLATE, FRONT	2-K3
SPACER, DRIVE PLATE, REAR	2-K3
SPACER, FAN BELT ADJUSTING BAR	1-D5
SPACER, FRONT DIFFERENTIAL DRIVE PINION BEARING	2-A10
SPACER, INPUT SHAFT	2-B8
SPACER, INSTRUMENT PANEL SAFETY PAD, SET	3-H2
SPACER, MANUAL DITENT SPRING	2-J5
SPACER, RADIATOR MOUNTING INSULATOR	1-F5
SPACER, REAR DIFFERENTIAL DRIVE PINION BEARING	2-L8
SPACER, REAR MEMBER	2-E8
SPACER, REAR SPRING LEAF	2-C15
SPACER, TRANSFER IDLER GEAR	2-L6
SPACER, TRANSFER INPUT SHAFT	2-L6
SPACER, WINCH DRUM, NO.1	2-B8
SPACER, WINCH DRUM, NO.2	2-B8
SPACER, WINCH WIRE GUIDE ROLLER	2-E8
SPANNER	1-B1
SPANNER SET	1-B1
SPEAKER ASSY, FRONT NO.1	4-K4
SPEEDOMETER ASSY	4-I2
SPIDER KIT, UNIVERSAL JOINT	2-I7
SPIDER KIT, UNIVERSAL JOINT (FOR STEERING MAIN SHAFT)	2-C11
SPIDER, DIFFERENTIAL	2-A9
SPINDLE, STEERING KNUCKLE	2-F14
SPLINE, OIL PUMP DRIVE	1-E3
SPRING (FOR ACCELERATOR CONNECTING ROD, NO.1)	3-D10
SPRING (FOR ACCELERATOR PEDAL ROD)	3-D10
SPRING (FOR ADAPTER SCREW)	1-D10
SPRING (FOR BRAKE PEDAL RETURN)	2-K12
SPRING (FOR CLUTCH PEDAL)	2-E1
SPRING (FOR OVERDRIVE BRAKE ACCUMULATOR PISTON)	2-D5
SPRING (FOR PUMP JET)	1-M8
SPRING (FOR REAR BRAKE SHOE HOLD DOWN)	2-K13
SPRING (FOR SLIDING BLOCK SHAFT)	1-E10
SPRING (FOR THROTTLE VALVE SLEEVE)	2-H5
SPRING (FOR WINCH MOTOR)	2-E8
SPRING (FOR 3-2 KICK DOWN ORIFICE CONTROL VALVE)	2-I5
SPRING ASSY, FRONT, LH	2-J14
SPRING ASSY, FRONT, RH	2-I14
SPRING ASSY, REAR LH	2-C15
SPRING ASSY, REAR RH	2-A15
SPRING SUB-ASSY, BRAKE PISTON RETURN	2-H4
SPRING SUB-ASSY, MANUAL DETENT	2-E5
SPRING SUB-ASSY, OVERDRIVE BRAKE RETURN	2-C4
SPRING SUB-ASSY, 1ST & REVERSE BRAKE RETURN	2-J4

SPRING

PART NAME	LOCATION
SPRING, ALTERNATOR BRUSH	1-M7
SPRING, ANTIRATTLE, NO.1	2-I13
SPRING, BACK (FOR THROTTLE SHAFT)	1-B9
SPRING, CHOKE VALVE RELIEF	1-B9
SPRING, CLUTCH RETRACTING	2-B1
SPRING, COMPRESSION	2-H3
SPRING, COMPRESSION (FOR ACCUMULATOR CONTROL VALVE)	2-I5
SPRING, COMPRESSION (FOR ACCUMULATOR PISTON NO.2)	2-F5
SPRING, COMPRESSION (FOR C-1 ACCMULATOR PISTOM)	2-F5
SPRING, COMPRESSION (FOR C-2 ACCMULATOR PISTOM)	2-F5
SPRING, COMPRESSION (FOR CHECK BALL)	2-L5
SPRING, COMPRESSION (FOR CHECK VALVE)	2-F5
SPRING, COMPRESSION (FOR DETENT REGULATOR VALVE)	2-G5
SPRING, COMPRESSION (FOR DETENT ROD)	2-H3
SPRING, COMPRESSION (FOR FLOW CONTROL VALVE)	2-J11
SPRING, COMPRESSION (FOR FRONT CLUTCH PISTON RETURN)	2-F4
SPRING, COMPRESSION (FOR GOVERNOR VALVE NO.2)	2-M4
SPRING, COMPRESSION (FOR GOVERNOR WEIGHT)	2-M4
SPRING, COMPRESSION (FOR HEAT CONTROL SHAFT)	1-C5
SPRING, COMPRESSION (FOR INNER)	1-I3
SPRING, COMPRESSION (FOR INTERMEDIATE MODULATOR VALVE)	2-G5
SPRING, COMPRESSION (FOR LOCK UP RELAY VALVE)	2-D5
SPRING, COMPRESSION (FOR LOCK UP SIGNAL VALVE)	2-D5
SPRING, COMPRESSION (FOR LOW MODULATOR VALVE)	2-G5
SPRING, COMPRESSION (FOR OUTER)	1-I3
SPRING, COMPRESSION (FOR OVERDRIVE CLUTCH EXHAUST VALVE)	2-I5
SPRING, COMPRESSION (FOR OVERDRIVE DIRECT CLUTCH)	2-C4
SPRING, COMPRESSION (FOR PARKING BRAKE PAWL ROD)	2-I12
SPRING, COMPRESSION (FOR PRIMARY DOWN SHIFT PLUG)	2-E5
SPRING, COMPRESSION (FOR PRIMARY REGULATOR VALVE)	2-E5
SPRING, COMPRESSION (FOR REAR CLUTCH PISTON RETURN)	2-G4
SPRING, COMPRESSION (FOR REAR DIFFERENTIAL LOCK RETAINER)	2-B9
SPRING, COMPRESSION (FOR REAR SIDE PLATE)	2-K11
SPRING, COMPRESSION (FOR REAR WHEEL BRAKE CYLINDER)	2-L13
SPRING, COMPRESSION (FOR REVERSE SHIFT RETURN PLUNGER)	2-B3
SPRING, COMPRESSION (FOR ROCKER ARM)	1-J3
SPRING, COMPRESSION (FOR SECONDARY DOWN SHIFT PLUG)	2-E5
SPRING, COMPRESSION (FOR SECONDARY REGULATOR VALVE)	2-H5
SPRING, COMPRESSION (FOR SECONDARY THROTTLE VALVE)	2-I5
SPRING, COMPRESSION (FOR SHIFT DETENT BALL LOW SIDE)	2-D3
SPRING, COMPRESSION (FOR SHIFT DETENT BALL)	2-A7
SPRING, COMPRESSION (FOR SHIFT LEVER)	2-G3
SPRING, COMPRESSION (FOR STEERING LINK JOINT)	2-H17
SPRING, COMPRESSION (FOR STEERING MAIN SHAFT)	2-C11
SPRING, COMPRESSION (FOR TRANSFER FR DRIVE SHIFT SHAFT)	2-A7
SPRING, COMPRESSION (FOR VANE PUMP SLIPPER)	2-K11
SPRING, COMPRESSION (FOR 1-2 RELAY VALVE)	2-H5
SPRING, COMPRESSION (FOR 1-2 SHIFT VALVE)	2-H5
SPRING, COMPRESSION (FOR 1ST & 2ND SHIFT RETURN PLUNGER)	2-C3
SPRING, COMPRESSION (FOR 2-3 SHIFT TIMING VALVE)	2-I5
SPRING, COMPRESSION (FOR 2-3 SHIFT VALVE)	2-H5
SPRING, COMPRESSION (FOR 2ND LOCK VALVE)	2-H5
SPRING, COMPRESSION (FOR 3-4 SHIFT VALVE)	2-J5
SPRING, COMPRESSION(FOR FRONT DIFFERENTIAL LOCK RETAINER)	2-B10
SPRING, COMPRESSION(FOR REVERSE&5TH SHIFT RETURN PLUNGER)	2-C3
SPRING, COMPRESSION, NO.2 (FOR SHIFT DETENT BALL)	2-D3
SPRING, CONICAL (FOR SHIFT LEVER)	2-H3
SPRING, CONICAL (FOR VALVE ROCKER SHAFT)	1-J3
SPRING, DASH POT OR POSITIONER ADJUSTING	1-A9
SPRING, DELIVERY VALVE	1-I9
SPRING, DIAPHRAGM	1-B9
SPRING, DIAPHRAGM STOP LEVER RETURN	1-M9
SPRING, EXHAUST MANIFOLD	1-J5
SPRING, FEED PUMP CHECK VALVE	1-G10

PART NAME	LOCATION
SPRING, FEED PUMP PISTON	1-G10
SPRING, FLOATING ARM	1-E10
SPRING, FUEL FILLER OPENING LID HINGE	3-A10
SPRING, GEAR SHIFT FORK LOCK BALL (FOR POWER TAKE-OFF)	2-C6
SPRING, GOVERNOR MAIN	1-M9
SPRING, GOVERNOR, A	1-G7
SPRING, GOVERNOR, B	1-G7
SPRING, HEADLAMP TENSION	4-A1
SPRING, HOOD LOCK AUXILIARY	3-C2
SPRING, HORN BUTTON CONTACT	2-F12
SPRING, IDLE ADJUSTING	1-A9
SPRING, IDLING	1-C10
SPRING, MECHANICAL GOVERNOR	1-C10
SPRING, NOZZLE HOLDER PRESSURE	1-D9
SPRING, OIL PUMP RELIEF VALVE	1-A4
SPRING, POWER PISTON	1-A9
SPRING, PUMP ARM	1-B9
SPRING, PUMP DAMPING	1-A9
SPRING, PUMP PLUNGER	1-I9
SPRING, RETAINER (FOR VALVE ROCKER SHAFT)	1-J3
SPRING, RETURN	1-F11
SPRING, RETURN (FOR ARM)	1-C10
SPRING, RETURN (FOR CAM PLATE)	1-D10
SPRING, RETURN (FOR CONTROL LEVER)	1-E10
SPRING, RETURN (FOR SPRING ARM)	1-C10
SPRING, RETURN (FOR STOPPER LEVER)	1-C10
SPRING, REVERSE SHIFT RESTRICT	2-C3
SPRING, SHIFT LOCK	2-B8
SPRING, SPEED CONTROL	1-A10
	1-E10
SPRING, STARTER BRAKE	1-E8
SPRING, STARTER BRUSH	1-E8
SPRING, STARTER MAGNET SWITCH RETURN	1-F8
SPRING, SYNCHROMESH SHIFTING KEY (FOR NO.3 CLUTCH HUB)	2-L2
SPRING, SYNCHROMESH SHIFTING KEY, NO.2	2-L2
SPRING, TENSION (FOR CLUTCH RELEASE FORK RETURN)	2-B1
SPRING, TENSION (FOR PARKING BRAKE BELL CRANK RETURN)	2-L13
SPRING, TENSION (FOR REAR BRAKE SHOE RETURN)	2-K13
SPRING, TENSION (FOR STEERING TILT LEVER)	2-F11
SPRING, TENSION (FOR TILT STEERING)	2-C11
SPRING, THROTTLE ADJUSTING	1-A9
SPRING, TIMER	1-J10
SPRING, TIMER SUB	1-J10
SPRING, TORSION (FOR PARKING LOCK PAWL)	2-L5
SPRING, TORSION (FOR REAR BRAKE AUTOMATIC ADJUST LEVER)	2-K13
SPRING, 1ST IDLE ADJUSTING	1-A9
SPRING, COMPRESSION	2-M8
STARTER ASSY	1-D8
STATOR ASSY, ALTERNATOR	1-M7
STATOR SUB-ASSY, MAGNET CLUTCH	4-K6
STAY ASSY, BACK DOOR, LH	3-E7
STAY ASSY, BACK DOOR, RH	3-D7
STAY ASSY, TAIL GATE, LH	3-D7
STAY ASSY, TAIL GATE, RH	3-D7
STAY SUB-ASSY, FRONT BUMPER, LH	3-J1
STAY SUB-ASSY, FRONT BUMPER, RH	3-J1
STAY SUB-ASSY, REAR BUMPER, LH	3-L1
STAY SUB-ASSY, REAR BUMPER, RH	3-L1
STAY, CONTROL SHAFT BRACKET	2-K9
STAY, EGR PIPE, NO.1	1-B11
STAY, FRONT BUMPER STEP, LH	3-K1
STAY, FRONT BUMPER STEP, RH	3-K1
STAY, INJECTION PUMP	1-G9
STAY, INJECTION PUMP BODY	1-J9

PART NAME	LOCATION
STAY, PROPELLER SHAFT DUST COVER	2-J7
STAY, WATER INLET HOLE	1-C5
STEP, FRONT BUMPER, LH	3-K1
STEP, FRONT BUMPER, RH	3-K1
STOPPER SUB-ASSY, BACK DOOR, LH	3-D7
STOPPER SUB-ASSY, BACK DOOR, RH	3-D7
STOPPER SUB-ASSY, CONSOLE COMPARTMENT DOOR	3-D4
STOPPER, ACCELERATOR PEDAL	3-D10
STOPPER, CAM GREASE	1-G7
STOPPER, CONSOLE BOX POCKET	3-D4
STOPPER, CONSOLE COMPARTMENT DOOR, NO.1	3-E4
STOPPER, CONSOLE COMPARTMENT DOOR, NO.2	3-E4
STOPPER, FUEL FILLER OPENING LID	3-A10
STOPPER, GLOVE COMPARTMENT DOOR ARM	3-I2
STOPPER, STEERING SHAFT THRUST	2-F11
STOPPER, TRANSFER INPUT GEAR	2-J6
STOPPER, VALVE VIBRATING	2-F5
STOPPER, WINCH	2-F8
STRAINER SUB-ASSY, OIL	1-M3
	2-E5
STRAINER, GOVERNOR OIL	2-M4
STRAINER, MASTER CYLINDER RESERVOIR, REAR	2-B13
STRAINER, THROTTLE OIL	2-E5
STRIKER ASSY, BACK DOOR LOCK	3-E7
STRIKER ASSY, REAR SEAT BACK LOCK, LH	3-D8
STRIKER ASSY, REAR SEAT BACK LOCK, RH	3-D8
STRIKER ASSY, TAIL GATE, LOWER LH	3-E7
STRIKER ASSY, TAIL GATE, LOWER RH	3-E7
STRIKER SUB-ASSY, REAR SEAT CUSHION LOCK	3-D8
STRIKER, CONSOLE COMPARTMENT DOOR LOCK	3-E4
STRIKER, GLOVE COMPARTMENT DOOR LOCK	3-I2
STRUT, ADJUSTING	2-C12
SUPPORT SUB-ASSY, CENTER	2-I4
SUPPORT SUB-ASSY, RADIATOR	3-E2
SUPPORT SUB-ASSY, RADIATOR GRILLE, CENTER	3-E2
SUPPORT SUB-ASSY, TILT STEERING	2-B11
SUPPORT SUB-ASSY, VACUUM TUBE UNION	2-F7
SUPPORT, ACCELERATOR CONTROL CABLE, NO.1	3-E10
SUPPORT, BATTERY TRAY, LH	3-J8
SUPPORT, BATTERY TRAY, RH	3-J8
SUPPORT, CLUTCH RELEASE CYLINDER	2-B2
SUPPORT, CLUTCH SHIFT LEVER	2-D8
SUPPORT, FRONT SEAT HEADREST	3-B8
SUPPORT, FUEL FILTER	1-A11
SUPPORT, GOVERNOR BODY	2-A5
SUPPORT, OIL LEVEL GAGE GUIDE	1-B2
SUPPORT, ROOF CARRIER, NO.1	3-L4
SUPPORT, ROOF CARRIER, NO.2	3-L4
SUPPORT, ROOF CARRIER, NO.3	3-L4
SUPPORT, ROOF HEADLINING, NO.1	3-H5
SUPPORT, ROOF HEADLINING, NO.2	3-H5
SUPPORT, ROOF HEADLINING, NO.3	3-H5
SUPPORT, ROOF HEADLINING, NO.4	3-H5
SUPPORT, ROOF HEADLINING, NO.5	3-H5
SUPPORT, ROOF HEADLINING, NO.6	3-H5
SUPPORT, ROOF HEADLINING, NO.7	3-H5
SUPPORT, ROOF HEADLINING, NO.8	3-H5
SUPPORT, THROTTLE WIRE	1-E11
SUPPORT, TILT STEERING COLUMN COVER	2-F11
SUPPORT, VALVE ROCKER, NO.1	1-J3
SUPPORT, VALVE ROCKER, NO.2	1-K3
SUPPORT, VALVE ROCKER, NO.3	1-K3
SUPPORT, VALVE ROCKER, NO.4	1-K3
SUPPORT, VALVE ROCKER, NO.5	1-K3

SWITCH – TRIM

PART NAME	LOCATION
SWITCH ASSY, ANTENNA	4-F3
SWITCH ASSY, BACK UP LAMP	4-D3
SWITCH ASSY, BRAKE WARNING TEST	4-E3
SWITCH ASSY, COURTESY LAMP (FOR FRONT DOOR)	4-D3
SWITCH ASSY, COURTESY LAMP (FOR GLOVE BOX)	4-D3
SWITCH ASSY, COURTESY LAMP (FOR REAR DOOR)	4-D3
SWITCH ASSY, HAZARD WARNING SIGNAL	4-E3
SWITCH ASSY, HEADLAMP DIMMER	4-D3
SWITCH ASSY, HEATER BLOWER	4-E3
SWITCH ASSY, IGNITION	4-E3
SWITCH ASSY, LIGHT CONTROL, NO.1	4-D3
SWITCH ASSY, MAGNET	4-D3
SWITCH ASSY, MAGNET STARTER	1-E8
SWITCH ASSY, NEUTRAL START	4-E3
SWITCH ASSY, OIL PRESSURE	4-I3
SWITCH ASSY, REAR WINDOW DEFOGGER	4-F3
SWITCH ASSY, STARTER	4-E3
SWITCH ASSY, STOP LAMP	4-E3
SWITCH ASSY, TURN SIGNAL	4-D3
SWITCH ASSY, VACUUM WARNING	4-C3
SWITCH ASSY, WINCH CONTROL	2-F8
SWITCH ASSY, WINDSHIELD WIPER	4-E3
SWITCH, COOLER	4-E3
SWITCH, LEVEL WARNING	4-E3
SWITCH, MAGNET, NO.2 (FOR WINCH MOTOR)	2-E8
SWITCH, PRESSURE	4-H5
SWITCH, REAR HEATER BLOWER	4-E3
SWITCH, REAR WIPER	4-E3
SWITCH, TEMPERATURE DETECT, NO.2	4-G3
SWITCH, TRANSFER INDICATOR, NO.1	4-D3
SWITCH, TRANSFER INDICATOR, NO.2	4-D3
SWITCH, TRANSFER INDICATOR, NO.3	4-D3
SWITCH, TRANSFER INDICATOR, NO.4	4-D3
SWITCH, TRANSMISSION CONTROL	4-E3
SWITCH, VACUUM	4-C3
SWIVEL, CONNECTING ROD (FOR FLOOR SHIFT)	2-H3
TACHOMETER ASSY, ENGINE	4-I2
TANK ASSY, FUEL	3-L9
TANK ASSY, RADIATOR RESERVE	1-E5
TAPE PLAYER ASSY	4-J4
TAPPET SUB-ASSY, INJECTION PUMP	1-I9
TAPPET, FEED PUMP	1-H10
TERMINAL SUB-ASSY, LEAD WIRE, ALTERNATOR	1-K7
TERMINAL, BATTERY POSITIVE	4-L1
THERMISTOR, COOLER, NO.1	4-H5
THERMOSTAT	1-C5
TIMER ASSY, AUTOMATIC	1-J10
TIMER, PREHEATING	4-B3
TIRE TUBE SET OR TUBELESS TIRE	2-H9
TOOL SET, STANDARD W/O JACK	1-B1
TRACK ASSY, LH SEAT, INNER (FOR BENCH SEAT)	3-C8
TRACK ASSY, LH SEAT, INNER (FOR SEPARATE SEAT)	3-C8
TRACK ASSY, LH SEAT, OUTER (FOR SEPARATE SEAT)	3-B8
TRACK ASSY, RH SEAT, INNER (FOR BENCH SEAT)	3-B8
TRACK ASSY, RH SEAT, INNER (FOR SEPARATE SEAT)	3-C8
TRACK ASSY, RH SEAT, OUTER (FOR SEPARATE SEAT)	3-B8
TRACK ASSY, SEAT, OUTER LH (FOR BENCH SEAT)	3-B8
TRACK ASSY, SEAT, OUTER RH (FOR BENCH SEAT)	3-B8
TRANSFER ASSY	2-E6
TRANSMISSION ASSY, AUTOMATIC	2-J3
TRANSMISSION ASSY, MANUAL	2-D2
TRAY, BATTERY	3-J8
TRIM, FRONT DOOR OPENING, LH	3-C5
TRIM, FRONT DOOR OPENING, RH	3-C5
TRIM, REAR DOOR OPENING, LH	3-C5

TRIM – UNION

PART NAME	LOCATION
TRIM, REAR DOOR OPENING, RH	3-C5
TRIM, ROOF HEADLINING, CENTER	3-I5
TRIM, ROOF HEADLINING, REAR	3-I5
TUBE (FOR CYLINDER HEAD)	1-H1
TUBE SUB-ASSY, FUEL MAIN	3-L9
TUBE SUB-ASSY, FUEL TANK SUCTION	3-M9
TUBE SUB-ASSY, OIL COOLER INLET, NO.1	2-M5
TUBE SUB-ASSY, OIL COOLER OUTLET, NO.1	2-M5
TUBE SUB-ASSY, OIL COOLER, NO.2	2-M5
TUBE SUB-ASSY, STEERING COLUMN	2-C11
TUBE SUB-ASSY, TRANSMISSION OIL FILLER	2-M3
TUBE, AIR	1-J6
TUBE, CANISTER TO V.S.V.	3-B10
TUBE, CLUTCH MASTER CYLINDER TO FLEXIBLE HOSE	2-E1
TUBE, FRONT BRAKE, NO.1	2-C14
TUBE, FRONT BRAKE, NO.2	2-C14
TUBE, FRONT BRAKE, NO.3	2-C14
TUBE, FRONT BRAKE, NO.4	2-C14
TUBE, FRONT BRAKE, NO.5	2-C14
TUBE, FRONT DRIVE VACUUM, NO.2	2-F7
TUBE, FRONT DRIVE VACUUM, NO.3	2-F7
TUBE, FUEL EMISSION, NO.1	3-M9
TUBE, FUEL EMISSION, NO.2	3-M9
TUBE, FUEL EMISSION, NO.3	3-A10
TUBE, FUEL MAIN, NO.1	3-M9
TUBE, FUEL MAIN, NO.2	3-M9
TUBE, FUEL MAIN, NO.3	3-M9
TUBE, FUEL, NO.1 (FOR CHARCOAL CANISTER)	3-A10
TUBE, LINE PRESSURE	2-F5
TUBE, LOCK UP SIGNAL VALVE APPLY	2-E5
TUBE, OUTER VENT VALVE TO CARBURETOR	3-A10
TUBE, PRESSURE FEED	2-B12
TUBE, REAR BRAKE, NO.1	2-D14
TUBE, REAR BRAKE, NO.2	2-D14
TUBE, REAR BRAKE, NO.3	2-D14
TUBE, REAR BRAKE, NO.5	2-D14
TUBE, REAR BRAKE, NO.6	2-D14
TUBE, RESERVOIR BRAKE	2-A13
TUBE, RETURN (FOR STEERING GEAR OUTLET)	2-C12
TUBE, SPEEDOMETER CASING	4-J2
TUBE, SUCTION	2-D7
TUBE, TRANSMISSION LUBE APPLY	2-J5
TUBE, VACUUM HOSE TO VACUUM HOSE	2-L1
TUBE, VACUUM RESERVOIR TO BRAKE BOOSTER	2-G13
TUBE, WHEEL CYLINDER, FRONT LH NO.1	2-D14
TUBE, WHEEL CYLINDER, FRONT RH NO.1	2-D14
TURN BUCKLE (FOR DIFFERENTIAL LOCK ROD)	2-J9
UNION (FOR CYLINDER HEAD)	1-H1
UNION (FOR FRONT AXLE BREATHER HOSE)	2-B10
UNION (FOR INJECTION PUMP INLET PIPE)	1-A4
UNION (FOR INJECTION PUMP OUTLET PIPE)	1-B4
UNION (FOR OIL COOLER TUBE)	2-M5
UNION (FOR OIL LEVEL GAGE GUIDE)	1-A2
UNION (FOR OIL PIPE, NO.1)	1-F3
UNION (FOR OIL PUMP OUTLET PIPE)	1-A4
UNION (FOR REAR AXLE BREATHER HOUSE)	2-C9
UNION (FOR VACUUM PUMP)	2-G13 2-K1
UNION (FOR VENTILATION HOSE TO MANIFOLD)	1-I5
UNION, AIR INJECTION	1-J6
UNION, NIPPLE	1-B9
UNION, NIPPLE (FOR FUEL FILTER INLET)	1-A11
UNION, PRESSURE PORT	2-K11
UNION, RESERVOIR (FOR BRAKE MASTER CYLINDER SIDE)	2-A13

PART NAME	LOCATION
UNION, SUCTION PORT	2-J11
UNION, VACUUM HOSE (FOR MANIFOLD SIDE)	2-G13
UNIT ASSY, COOLER	4-H5
UNIT SUB-ASSY, RADIATOR HEATER	4-E5
UNIT SUB-ASSY, REAR HEATER	4-E5
VALVE (FOR TUBELESS TIRE)	2-H9
VALVE ASSY, ACTUATOR CHECK	2-F13
VALVE ASSY, AIR SWITCHING	1-J6
VALVE ASSY, BRAKE MASTER CYLINDER OUTLET CHECK	2-B13
VALVE ASSY, EGR	1-B11
VALVE ASSY, FLOW CONTROL	2-J11
VALVE ASSY, HEATER WATER	4-M5
VALVE ASSY, MASTER CYLINDER OUTLET (FOR REAR SIDE)	2-B13
VALVE ASSY, POWER STEERING CONTROL	2-B11
VALVE ASSY, PROPORTIONING AND BY-PASS	2-C14
VALVE ASSY, VACUUM CHECK (FOR BRAKE)	2-G13
VALVE ASSY, VACUUM CHECK (FOR CLUTCH VACUUM)	2-K1
VALVE ASSY, VACUUM SWITCHING	1-A7
VALVE ASSY, WATER UNIT	4-F5
VALVE SUB-ASSY, CHECK	1-H8
VALVE SUB-ASSY, HIGH ALTITUDE COMPENSATOR	1-A7
VALVE SUB-ASSY, INJECTION PUMP DELIVERY	1-I9
VALVE SUB-ASSY, NEEDLE	1-M8
VALVE SUB-ASSY, OIL CHECK	1-B2
VALVE SUB-ASSY, VENTILATION	1-L2
VALVE, ACCUMULATOR CONTROL	2-I5
VALVE, BIMETAL VACUUM SWITCHING, NO.1	1-A7
VALVE, BIMETAL VACUUM SWITCHING, NO.2	1-A7
VALVE, CHECK	1-I6 2-E5 3-A10
VALVE, CHECK (FOR AIR INJECTION SYSTEM)	1-J6
VALVE, CHECK, NO.1	1-A7
VALVE, COOLER COMPRESSOR DISCHARGE SERVICE	4-M6
VALVE, COOLER COMPRESSOR SERVICE	4-M6
VALVE, COOLER COMPRESSOR SUCTION SERVICE	4-L6
VALVE, COOLER EXPANSION	4-H5
VALVE, CUT BACK	2-H5
VALVE, DETENT REGULATOR	2-G5
VALVE, EXHAUST	1-I3
VALVE, FEED PUMP CHECK	1-G10
VALVE, GOVERNOR, NO.1	2-M4
VALVE, GOVERNOR, NO.2	2-M4
VALVE, HEADLAMP CLEANER WASHER HOSE	4-F4
VALVE, INTAKE	1-I3
VALVE, INTERMEDIATE COAST SHIFT	2-H5
VALVE, INTERMEDIATE MODULATOR	2-G5
VALVE, LOCK UP RELAY	2-D5
VALVE, LOCK UP RELAY CONTROL	2-E5
VALVE, LOCK UP SIGNAL	2-D5
VALVE, LOW COAST SHIFT	2-G5
VALVE, LOW MODULATOR	2-G5
VALVE, MAGNET (FOR IDLE UP DEVICE)	4-D6
VALVE, MANIFOLD HEAT CONTROL	1-K5
VALVE, MANUAL	2-E5
VALVE, MANUAL DOWN TIMING	2-I5
VALVE, OIL PUMP RELIEF	1-A4
VALVE, OUTER VENT CONTROL	4-F3
VALVE, OVERDRIVE CLUTCH EXHAUST	2-I5
VALVE, POWER	1-M8
VALVE, PRIMARY REGULATOR	2-E5
VALVE, PRIMARY THROTTLE	2-H5
VALVE, REAR WASHER HOSE	4-E4
VALVE, SECONDARY REGULATOR	2-H5

PART NAME	LOCATION
VALVE, SECONDARY SLOW CUT	1-M8
VALVE, SECONDARY THROTTLE	2-I5
VALVE, THERMOSTATIC	1-F6
VALVE, VACUUM CONTROL, NO.1	1-A7
VALVE, VACUUM TRANSMITTING, NO.1	1-A7
VALVE, VACUUM TRANSMITTING, NO.2	1-A7
VALVE, VENTURI THROTTLE	1-F11
VALVE, WINDSHIELD WASHER HOSE	4-B4
VALVE, 1-2 RELAY	2-H5
VALVE, 1-2 SHIFT	2-H5
VALVE, 2-3 SHIFT	2-H5
VALVE, 2-3 SHIFT TIMING	2-I5
VALVE, 2ND LOCK	2-H5
VALVE, 3-2 KICK DOWN ORIFICE CONTROL	2-I5
VALVE, 3-4 COAST SHIFT	2-J5
VALVE, 3-4 SHIFT	2-I5
VALVE, 3RD COAST SHIFT	2-I5
VENTURI ASSY	1-E11
VISOR ASSY, LH	3-H8
VISOR ASSY, RH	3-H8
WASHER (FOR CAM PLATE BUSH)	1-E10
WASHER (FOR CENTER SUPPORT)	2-I4
WASHER (FOR MAGNET CLUTCH)	4-L6
WASHER (FOR MANUAL TRANSMISSION OUTPUT SHAFT SET)	2-K2
WASHER (FOR NOZZLE HOLDER PRESSURE SPRING)	1-D9
WASHER (FOR PRIMARY REGULATOR VALVE)	2-E5
WASHER (FOR REAR DIFFERENTIAL TAPERED ROLLER BEARING)	2-M8
WASHER (FOR RING PACKING)	1-D9
WASHER (FOR SHIFT ARM PIVOT)	2-B3
WASHER (FOR 5TH SHIFT ARM)	2-B3
WASHER (FRONT DIFFERENTIAL TAPERED ROLLER BEARING)	2-C10
WASHER SET, CRANKSHAFT THRUST	1-C3
WASHER, BRAKE RESERVOIR SET BOLT	2-A13
WASHER, C (FOR REAR BRAKE)	2-L13
WASHER, CLAW (FOR STEERING KNUCKLE WASHER)	2-I10
WASHER, CLUTCH RESERVOIR SET BOLT	2-H1
WASHER, CONE (FOR FRONT AXLE SHAFT)	2-H10
WASHER, CONE (FOR REAR AXLE SHAFT)	2-E9
WASHER, DIFFERENTIAL SIDE GEAR THRUST, NO.2	2-A9
WASHER, DRAIN SCREW	1-A10
WASHER, FELT, STARTER	1-E8
WASHER, FRONT AXLE DIFFERENTIAL PINION THRUST	2-D10
WASHER, FRONT AXLE DIFFERENTIAL SIDE GEAR THRUST	2-D10
WASHER, FRONT SHOCK ABSORBER CUSHION, NO.1	2-K14
WASHER, FRONT SHOCK ABSORBER CUSHION, NO.2	2-K14
WASHER, FRONT WHEEL ADJUSTING LOCK	2-I10
WASHER, IDLING SPRING	1-C10
WASHER, LOCK (FOR SHIFT & SELECT LEVER)	2-C3
WASHER, LOCK (FOR STEERING LEVER)	1-D10
WASHER, OVERDRIVE PLANETARY GEAR THRUST, NO.1	2-D4
WASHER, OVERDRIVE PLANETARY GEAR THRUST, NO.2	2-D4
WASHER, PLANETARY CARRIER THRUST, NO.1	2-K4
WASHER, PLANETARY CARRIER THRUST, NO.2	2-L4
WASHER, PLATE (FOR AUTOMATIC TRANSMISSION CASE)	2-A4
WASHER, PLATE (FOR CONNECTING PIN)	1-E10
WASHER, PLATE (FOR DRIVE PINION)	2-L8
WASHER, PLATE (FOR FLOATING LEVER)	1-E10
WASHER, PLATE (FOR FRONT AXLE DRIVE PINION)	2-D10
WASHER, PLATE (FOR FRONT POWER TAKE-OFF SHAFT)	2-D6
WASHER, PLATE (FOR MANUAL VALVE LEVER)	2-L5
WASHER, PLATE (FOR OUTPUT SHAFT)	2-K4
WASHER, PLATE (FOR PARKING LOCK PAWL SHAFT)	2-L5
WASHER, PLATE (FOR REAR DIFFERENTIAL DRIVE PINION)	2-K8
WASHER, PLATE (FOR SPEEDOMETER DRIVE GEAR)	2-J6

PART NAME	LOCATION
WASHER, PLATE (FOR STEERING WORM)	2-M10
WASHER, PLATE (FOR STOPPER LEVER)	1-C10
WASHER, PLATE (FOR TIMING GEAR)	1-I3
WASHER, PLATE (FOR TRANSFER OUTPUT SHAFT)	2-G6
WASHER, REAR DIFFERENTIAL PINION THRUST	2-A9
WASHER, REAR DIFFERENTIAL SIDE GEAR THRUST NO.1	2-A9
WASHER, REAR SHOCK ABSORBER CUSHION, NO.1	2-D15
WASHER, REAR SHOCK ABSORBER CUSHION, NO.2	2-D15
WASHER, REAR SHOCK ABSORBER CUSHION, NO.3	2-D15
WASHER, REAR SHOCK ABSORBER CUSHION, NO.4	2-D15
WASHER, REAR WIPER LINK PIVOT, NO.1	4-L3
WASHER, SCREW PLUG	1-F10
WASHER, SEAL (FOR CROSSSHAFT ADJUSTING SCREW)	2-B11
WASHER, SEAL (FOR CYLINDER HEAD COVER)	1-J1
WASHER, SEAL (FOR HEAD COVER SET)	1-K3
WASHER, SECTOR SHAFT THRUST	2-E11
WASHER, SPRING	1-J9
WASHER, STARTER IDLE GEAR CLUTCH	1-F8
WASHER, THROTTLE VALVE SHAFT ADJUSTING	1-F11
WASHER, TRANSFER IDLER GEAR SIDE THRUST	2-K6
WASHER, TYPE C (FOR REVERSE SHIFT RETURN PLUNGER)	2-B3
WASHER, WAVE (FOR MANUAL VALVE LEVER)	2-L5
WASHER, 1ST GEAR THRUST	2-L2
WASHER, 5TH GEAR THRUST	2-L2
WAY (FOR BOOSTER VACUUM)	2-G13
WAY, NO.1 (FOR FRONT BRAKE TUBE)	2-C14
WAY, NO.1 (FOR REAR BRAKE TUBE)	2-D14
WAY, NO.2 (FOR FRONT BRAKE TUBE)	2-C14
WAY, NO.2 (FOR REAR BRAKE TUBE)	2-D14
WAY, 3 (FOR FRONT DRIVE SHIFT)	2-F7
WAY, 4 (FOR FRONT DRIVE SHIFT)	2-F7
WEATHERSTRIP ASSY, FRONT DOOR GLASS, INNER	3-A6
WEATHERSTRIP ASSY, REAR DOOR GLASS, INNER	3-I6
WEATHERSTRIP SUB-ASSY, BACK DOOR	3-A7
WEATHERSTRIP, BACK DOOR GLASS	3-C7
WEATHERSTRIP, BACK DOOR, LOWER	3-B7
WEATHERSTRIP, BACK DOOR, UPPER	3-C7
WEATHERSTRIP, FRONT DOOR GLASS, OUTER	3-A6
WEATHERSTRIP, FRONT DOOR, LH	3-A6
WEATHERSTRIP, FRONT DOOR, RH	3-A6
WEATHERSTRIP, HOOD TO COWL TOP	3-M2
WEATHERSTRIP, REAR DOOR GLASS, OUTER	3-I6
WEATHERSTRIP, REAR DOOR QUARTER WINDOW, RH	3-I6
WEATHERSTRIP, REAR DOOR, LH	3-H6
WEATHERSTRIP, REAR DOOR, RH	3-H6
WEATHERSTRIP, SIDE WINDOW, NO.1 (FOR FIXED TYPE)	3-J4
WEATHERSTRIP, WINDSHIELD	3-M2
WEDGE, CASTER (FOR FRONT LEAF SPRING)	2-J14
WEIGHT, BALANCE (FOR DISC WHEEL)	2-G9
WEIGHT, GOVERNOR	1-G7 2-M4
WEIGHT, TIMER	1-J10
WHEEL ASSY, STEERING	2-E12
WHEEL, DISC (FOR FRONT)	2-G9
WHEEL, DISC (FOR REAR)	2-H9
WINCH ASSY	2-A8
WIRE ASSY, ACCELERATOR	3-D10
WIRE ASSY, CHAIN	2-E8
WIRE ASSY, LICENSE LAMP FEED	4-F2
WIRE SUB-ASSY, ALTERNATOR	4-F2
WIRE SUB-ASSY, BODY GROUND	4-C2
WIRE SUB-ASSY, INDICATOR LAMP	2-H3
WIRE SUB-ASSY, REAR WINDOW DEFOGGER EARTH	4-C2
WIRE, CONSOLE BOX	4-E2

PART NAME	LOCATION
WIRE, COWL	4-C2
WIRE, COWL, NO.2	4-D2
WIRE, COWL, NO.4	4-D2
WIRE, DIFF LOCK INDICATOR	4-F2
WIRE, ENGINE	4-C2
WIRE, ENGINE ROOM, NO.2	4-C2
WIRE, ENGINE, NO.4	4-C2
WIRE, FLOOR	4-E2
WIRE, FLOOR, NO.2	4-E2
WIRE, FLOOR, NO.3	4-E2
WIRE, FRAME, NO.2	4-E2
WIRE, FRONT DOOR, LH	4-D2
WIRE, FRONT DOOR, RH	4-D2
WIRE, FUEL GAGE	4-F2
WIRE, GOVERNOR HOUSING SEAL	1-A10 1-C10
WIRE, INSTRUMENT PANEL	4-D2
WIRE, LAMP	4-F2
WIRE, LEAD, NO.1 (FOR STARTER)	1-E8
WIRE, LUGGAGE ROOM, NO.2	4-E2
WIRE, MOTOR ANTENNA	4-F2
WIRE, PARKING BRAKE, LH	2-L13
WIRE, PARKING BRAKE, RH	2-L13
WIRE, RELAY	4-F2
WIRE, ROOF, NO.1	4-E2
WIRE, SEAL	1-E11
WIRE, SWITCH	4-F2
WIRE, TAIL GATE LOCK, NO.1	3-E7
WIRE, TAIL GATE LOCK, NO.2	3-E7
WIRE, TAIL GATE LOCK, NO.3	3-E7
WIRE, TRANSMISSION	4-C2
WIRE, WATER PUMP BEARING RETAINING	1-K4
WIRE, WINCH MOTOR	2-F8
WIRING ASSY, COURTESY LAMP SWITCH (FOR FR OR RR DOOR)	4-F2
WIRING SUB-ASSY, REAR WIPER	4-C2
WIRING, COOLER, NO.2	4-H5
WORM ASSY, STEERING	2-C11
WORM KIT, POWER STEERING	2-M10
WRENCH, HUB NUT BOX	1-B1
WRENCH, MONKEY	1-B1
WRENCH, SPARK PLUG	1-B1
WRENCH, WHEEL CAP	1-C1
YOKE ASSY, STARTER	1-D8
YOKE SUB-ASSY, UNIVERSAL JOINT SLEEVE	2-I7
YOKE SUB-ASSY, WINCH	2-E8
YOKE, STEERING SLIDING	2-C11
YOKE, STEERING WORM	2-D11
YOKE, UNIVERSAL JOINT FLANGE	2-I7

CONTENTS

(PART NUMBER – LOCATION)

04044 – 11298	A13
11298 – 16129	B13
16131 – 22148	C13
22148 – 27356	D13
27356 – 33346	E13
33348 – 36327	F13
36337 – 42603	G13
42652 – 47062	H13
47101 – 52130	I13
52130 – 58510	J13
58510 – 67002	K13
67003 – 71077	L13
71301 – 78180	M13
78180 – 85210	A14
85210 – 90044	B14
90044 – 90301	C14
90301 – 90446	D14
90447 – 90937	E14
90937 – 99915	F14

	PART NUMBER	LOCATION	PART NUMBER	LOCATION	PART NUMBER	LOCATION
	04044-60050-	2-M10	04482-60040-	2-B15	11101-59096-	1-H1
	-60060-	2-M10		2-I14	-61021-	1-H1
	-60070-	2-M10	04483-60050-	2-B15	-61040-	1-H1
	-60110-	2-M10	04491-60010-	2-I13	-68011-	1-H1
	04111-58011-	1-F1	04493-60070-	2-A13	11106-58010-	1-D9
	-58012-	1-F1	-60090-	2-A13	-58011-	1-D9
	-58013-	1-F1	-60160-	2-A13	-68011-	1-D9
	-58050-	1-F1	04495-60010-	2-K13	11115-58010-	1-H1
	-61040-	1-F1	04881-10010-	4-L6	-58011-	1-H1
	-61041-	1-F1	-14030-	4-L6	-58012-	1-H1
	-61060-	1-F1	09101-60112-	1-B1	-58040-	1-H1
S	-68020-	1-F1	-60122-	1-B1	-61010-	1-H1
	04112-58010-	1-F1	-60230-	1-B1	-61020-	1-H1
	-58011-	1-F1	-60231-	1-B1	-68020-	1-H1
	-58040-	1-F1	-60240-	1-B1	11122-56020-	1-I1
	-61040-	1-F1	-60241-	1-B1	-56021-	1-I1
S	-68020-	1-F1	09110-60030-	1-B1	-61011-	1-I1
	04161-56080-	1-J4	-60040-	1-B1	-68010-	1-I1
	-68010-	1-J4	09111-60050-	1-B1	11123-61011-	1-I1
	04162-61020-	1-J4	09114-60030-	1-B1	11126-61011-	1-I1
	04211-61140-	1-J8	-60050-	1-B1	11127-61011-	1-I1
	-61170-	1-J8	09115-35040-	1-B1	11131-60010-	1-I1
	04212-61030-	1-J8	-60030-	1-B1	-61010-	1-I1
	04311-60030-	2-H1	09116-35041-	1-B1	-68010-	1-I1
	-60040-	2-H1	09120-60050-	1-F1	11132-60030-	1-I1
	-60050-	2-H1	-60070-	1-B1	-61010-	1-I1
	04313-40021-	2-B2	09130-00030-	1-B1	11135-60010-	1-I1
	-60020-	2-B2	09140-27010-	1-B1	-68010-	1-I1
	-60040-	2-B2	09150-60010-	1-B1	11136-60030-	1-I1
	-60050-	2-B2	09155-44010-	1-B1	11176-56010-	1-D9
	-60060-	2-B2	09183-00030-	1-C1	11177-47010-	1-D9
	04317-60020-	1-F2	-60010-	1-C1	-56010-	1-D9
	04318-60010-	2-L1	11011-56010-	1-C3	11201-68011-	1-I1
	-60030-	2-L1	-56020-	1-C3	-69045-	1-I1
	04331-60040-	2-D2	-61010-	1-C3	11203-56030-	1-M1
	-60041-	2-D2	-68020-	1-C3	-56040-	1-M1
	-60060-	2-D2	11012-56010-	1-C3	-56041-	1-M1
	-60080-	2-D2	-56020-	1-C3	-61011-	1-M1
	-60081-	2-D2	-61010-	1-C3	11211-56031-	1-I1
	04351-60010-	2-J3	S -68020-	1-C3	-59045-	1-I1
	04371-10011-	2-C11	11013-56010-	1-C3	11213-56011-	1-J1
	-36021-	2-I7	-56020-	1-C3	-56012-	1-J1
	-56030-	2-I7	-61010-	1-C3	-61011-	1-J1
	04383-60070-	2-K7	S -68020-	1-C3	-68010-	1-J1
	04384-60050-	2-K7	11071-61010-01	1-C3	11251-68010-	1-M1
	-60060-	2-K7	-61010-02	1-C3	11253-56010-	1-M1
S	04412-60010-	2-B9	-61010-03	1-C3	-60010-	1-M1
	04434-60012-	2-E14	-61010-04	1-C3	-68010-	1-M1
	04443-60080-	2-F13	-61010-05	1-C3	11293-58010-	1-B7
	-60110-	2-F13	-68020-01	1-D3	-61011-	1-B7
	-60240-	2-F13	-68020-02	1-D3	-68011-	1-B7
	-60241-	2-F13	11072-61010-01	1-C3	11294-34020-	1-B7
	-60270-	2-F13	-61010-02	1-C3	11295-46010-	1-I1
N	-60271-	2-F13	-61010-03	1-C3	11298-61021-	1-B7
	04445-60020-	2-A11	-61010-04	1-C3	-61022-	1-B7
	-60030-	2-A11	-61010-05	1-C3	-61023-	1-B7
	04446-30010-	2-I11	11073-61010-01	1-C3	-61024-	1-B7
	-35010-	2-I11	-61010-02	1-C3	-61025-	1-B7
	04455-60010-	2-A11	-61010-03	1-C3	-61026-	1-B7
	-60020-	2-A11	-61010-04	1-C3	-61031-	1-B7
	04474-60010-	2-L13	-61010-05	1-C3	-61032-	1-B7
	04476-60050-	2-L13	11101-58012-	1-H1	-61033-	1-B7
	04479-30030-	2-I13	-58013-	1-H1	-61034-	1-B7
	04481-60020-	2-I14	-59095-	1-H1	-61035-	1-B7

PART NUMBER	LOCATION
11298-61036-	1-B7
11301-56030-	1-E2
-56031-	1-E2
-68020-	1-E2
11302-56030-	1-E2
-61020-	1-E2
-61030-	1-E2
11311-61010-	1-E2
-61020-	1-E2
11312-56030-	1-E2
-56031-	1-E2
-61010-	1-E2
-61020-	1-E2
-68010-	1-E2
11321-68020-	1-E2
11328-56030-	1-E2
-60010-	1-E2
-61010-	1-E2
-68020-	1-E2
11345-48010-	1-E2
11355-56040-	1-E2
-56052-	1-E2
-56053-	1-E2
-68011-	1-E2
-68020-	1-F2
11369-60011-	1-F2
11381-56030-	1-F2
-56031-	1-F2
-68010-	1-F2
11383-47010-	1-F2
-56030-	1-F2
-56031-	1-F2
11391-56020-	1-F2
-60010-	1-F2
11400-58010-	1-E1
-58011-	1-E1
-58012-	1-E1
-58040-	1-E1
-61011-	1-E1
S -68020-	1-E1
11401-59075-	1-M1
-59115-	1-M1
-59225-	1-M1
-59226-	1-M1
-59305-	1-M1
-69055-	1-M1
-69056-	1-M1
-69196-	1-M1
11409-68020-	1-A2
11452-56040-	1-A2
-56050-	1-A2
-60013-	1-A2
-61010-	1-A2
11459-56040-	1-B2
-68020-	1-B2
11461-58010-	1-B2
-58020-	1-B2
11475-58010-	1-B2
11476-58010-	1-B2
11701-56010-01	1-D3
-56010-02	1-D3
-61010-01	1-C3
-61010-02	1-C3
-61010-03	1-C3
11701-61010-04	1-C3
-61010-05	1-D3
-68020-01	1-D3
-68020-02	1-D3
11702-56010-	1-C3
-60013-	1-C3
11703-60013-	1-C3
11704-56010-	1-C3
-56020-	1-C3
-60013-	1-C3
-61010-	1-C3
-68021-	1-C3
11705-56010-	1-C3
-56020-	1-C3
-60013-	1-C3
-61010-	1-C3
-68021-	1-C3
11706-68021-	1-C3
11707-56010-	1-C3
-56020-	1-C3
-68021-	1-C3
11802-56011-	1-H3
-56020-	1-H3
-60011-	1-H3
-61010-	1-H3
-68011-	1-H3
11803-68011-	1-H3
11804-60021-	1-H3
-61010-	1-H3
-68011-	1-H3
11805-60021-	1-H3
-61010-	1-H3
12101-56060-	1-B2
-59145-	1-B2
-61010-	1-B2
-61011-	1-B2
-68012-	1-B2
12151-56030-	1-B2
-60021-	1-B2
-61010-	1-B2
12157-10010-	2-A8
	2-B10
	2-B9
	2-F2
	2-G2
	2-G6
	2-M3
12180-13010-	1-J1
-13030-	1-J1
-70010-	1-J1
12204-61010-	1-L2
12251-56030-	1-L2
-56031-	1-L2
-56040-	1-L2
12261-61020-	1-L2
-68010-	1-L2
12301-61012-	1-I2
-61013-	1-I2
-61014-	1-I2
-68010-	1-I2
12311-56020-	1-I2
-58031-	1-I2
-61011-	1-I2
-61012-	1-I2
12311-61070-	1-I2
12312-68010-	1-I2
12315-56010-	1-I2
-56011-	1-I2
-58020-	1-I2
-61011-	1-I2
-61012-	1-I2
-61013-	1-I2
-68040-	1-I2
12316-68010-	1-I2
12361-56031-	1-J2
-58030-	1-J2
-59035-	1-J2
-61020-	1-J2
-68051-	1-J2
12371-58010-	1-J2
-58020-	1-J2
-61020-	1-J2
-61030-	1-J2
-68040-	1-J2
-68050-	1-J2
12511-56030-	1-J2
-56031-	1-J2
-56040-	1-J2
-60081-	1-J2
-61021-	1-J2
-68030-	1-J2
13011-58010-	1-D3
-58011-	1-D3
-61010-	1-D3
-68020-	1-D3
13013-61010-	1-D3
-68020-	1-D3
13015-61[illegible] -	1-D3
13017-61010-	1-D3
13041-58010-01	1-D3
-58010-02	1-D3
-68040-01	1-D3
-68040-02	1-D3
13101-58011-	1-D3
-58012-	1-D3
-61011-	1-D3
-68011-	1-D3
13103-61011-	1-D3
-68011-	1-D3
13105-61011-	1-D3
13107-61011-	1-D3
13201-58010-	1-D3
-59035-	1-D3
-60011-	1-D3
-68010-	1-D3
13202-58010-	1-D3
-60011-	1-D3
13203-60011-	1-D3
13204-58010-	1-D3
-58011-	1-D3
-60011-	1-D3
-68040-	1-D3
13205-58010-	1-D3
-58011-	1-E3
-60011-	1-D3
-68040-	1-D3
13206-68040-	1-D3
13207-58010-	1-D3

PART NUMBER	LOCATION
13207-58011-	1-E3
-68040-	1-D3
13265-58010-	1-E3
-68010-	1-E3
-69015-	1-E3
13401-58010-	1-E3
-58020-	1-E3
-60015-	1-E3
-61010-	1-E3
-68011-	1-E3
13405-56031-	1-E3
-59055-	1-E3
-68011-	1-E3
-69015-	1-E3
13453-47010-	1-E3
-56020-	1-E3
-60010-	1-E3
13470-56100-	1-E3
-56101-	1-E3
-56170-	1-E3
-60031-	1-E3
-60120-	1-E3
-61010-	1-E3
-68020-	1-E3
13477-60030-	1-F3
13478-60010-	1-F3
13504-56020-	1-F3
-56030-	1-F3
13508-56010-	1-F3
13511-56010-	1-H3
-56030-	1-H3
-60060-	1-H3
-68010-	1-H3
13519-56010-	1-E3
-68010-	1-E3
13521-56020-	1-F3
-56030-	1-F3
-60010-	1-F3
-68010-	1-F3
13523-56030-	1-H3
-56040-	1-H3
-60030-	1-H3
-68010-	1-H3
13525-56010-	1-F3
-68010-	1-F3
13526-68010-	1-F3
13571-56010-	1-I3
-56020-	1-I3
-60010-	1-I3
-61010-	1-I3
-68010-	1-I3
13572-56010-	1-F3
-56020-	1-F3
-68010-	1-F3
13581-68010-	1-F3
13582-68010-	1-F3
13711-58010-	1-I3
-60021-	1-I3
-68010-	1-I3
13715-58010-	1-I3
-58011-	1-I3
-60032-	1-I3
-61010-	1-I3
-61030-	1-I3
13715-68010-	1-I3
13734-60030-	1-I3
13741-56020-	1-I3
-56021-	1-I3
-60030-	1-I3
-68010-	1-I3
13751-47011-	1-I3
-56011-	1-I3
-56012-	1-I3
-56020-	1-I3
-61010-	1-I3
13755-47011-	1-I3
-61010-	1-I3
13781-31011-	1-J3
-56010-	1-J3
-61010-	1-J3
-68010-	1-J3
13811-56020-	1-J3
-56030-	1-J3
-61021-	1-J3
-61030-	1-J3
-68011-	1-J3
13812-56020-	1-J3
-56030-	1-J3
-61021-	1-J3
-61030-	1-J3
-68020-	1-J3
13901-56020-	1-J3
-61011-	1-J3
-61020-	1-J3
-68010-	1-J3
13951-56010-	1-J3
-61012-	1-J3
-68010-	1-J3
13952-56010-	1-K3
-61012-	1-K3
-68010-	1-K3
13953-56010-	1-K3
-68010-	1-K3
13954-68010-	1-K3
13955-68010-	1-K3
13958-56010-	1-K3
13994-61010-	1-J3
15012-60014-	1-M3
15077-56010-	1-A4
15100-61010-	1-M3
-61011-	1-M3
15104-56040-	1-M3
-56050-	1-M3
-68012-	1-M3
15115-56030-	1-M3
-68020-	1-M3
15121-56030-	1-M3
-61011-	1-M3
-68020-	1-M3
-88111-	1-M3
15122-56030-	1-A4
-61011-	1-A4
-68020-	1-A4
-79410-	1-M3
15125-60013-	1-A4
15126-60013-	1-A4
15131-22010-	1-A4
-24010-	1-A4
15132-40010-	1-A4
15132-76011-	1-A4
15133-20010-	1-A4
-24010-	1-A4
15134-20010-	1-A4
15149-68010-	1-M3
15184-[illegible]010-	1-J4
15193-56010-	1-M3
-56020-	1-M3
15301-56020-	1-B2
-56040-	1-B2
-61010-	1-B2
-68020-	1-B2
15403-56040-	1-A4
-56041-	1-A4
-60020-	1-A4
-68010-	1-A4
15422-56020-	1-M3
15600-41010-	1-E4
15601-68010-	1-E4
15605-58010-	1-B2
15609-56040-	1-E4
-58010-	1-E4
-61010-	1-E4
-61011-	1-E4
-61012-	1-E4
-61020-	1-E4
-68030-	1-E4
15621-41010-	1-E4
15691-56030-	1-E4
-60010-	1-E4
-68020-	1-E4
15701-56010-	1-H4
-56011-	1-H4
15707-61010-	1-H4
-68011-	1-A4
-68020-	1-A4
15708-58010-	1-B2
-58020-	1-B2
15710-56040-	1-G4
-56041-	1-G4
-61010-	1-G4
-68010-	1-G4
15725-56010-	1-G4
-56011-	1-G4
15771-61010-	1-H4
15777-61011-	1-H4
15783-68010-	1-A4
16100-59105-	1-J4
-61071-	1-J4
-61130-	1-J4
-69035-	1-J4
16104-41111-	1-J4
-52011-	1-J4
-52012-	1-J4
-52013-	1-J4
16110-61071-	1-J4
-61081-	1-J4
16115-68010-	1-J4
16117-56040-	1-J4
-61012-	1-J4
16119-56040-	1-K4
16120-69015-	1-K4
16124-61012-	1-K4
16129-68010-	1-K4

PART NUMBER	LOCATION
16131-56040-	1-K4
-68010-	1-K4
16141-68010-	1-K4
-76010-	1-K4
16171-41170-	1-K4
-61071-	1-K4
16173-61070-	1-K4
16193-47020-	1-K4
16198-41050-	1-K4
-41170-	1-K4
16210-58011-	1-K4
-58012-	1-K4
-61071-	1-K4
-61120-	1-K4
-68021-	1-K4
16261-56011-	1-C5
-56012-	1-C5
-60011-	1-C5
16271-56020-	1-K4
-60011-	1-K4
-68010-	1-K4
16323-68040-	1-C5
N -68050-	1-C5
16325-68020-	1-C5
16329-68010-	1-C5
16331-56020-	1-C5
-56030-	1-C5
-61032-	1-D5
-61041-	1-D5
-68011-	1-C5
16333-56040-	1-D5
-56060-	1-D5
-61100-	1-C5
-61110-	1-C5
-68010-	1-D5
16341-56020-	1-D5
-61020-	1-D5
-68010-	1-D5
16343-56020-	1-D5
-60010-	1-D5
-61010-	1-D5
-68010-	1-D5
16360-61015-	1-D5
16361-41070-	1-D5
-61011-	1-D5
-61020-	1-D5
-68010-	1-D5
16363-61020-	1-D5
16371-56040-	1-K4
-68040-	1-K4
16381-56030-	1-D5
-56050-	1-D5
-58020-	1-D5
-60081-	1-D5
-61011-	1-D5
-68030-	1-D5
16400-58010-	1-D5
-58011-	1-D5
-58180-	1-E5
-58190-	1-E5
-61040-	1-D5
-61050-	1-D5
-61051-	1-D5
-68090-	1-D5
16400-68100-	1-D5
-68110-	1-D5
16401-41021-	1-E5
-71010-	1-E5
16405-90A00-	1-E5
-90A02-	1-E5
-90A04-	1-E5
16417-24200-	1-E5
16418-24200-	1-E5
16480-90A00-	1-E5
16571-58010-	1-E5
-58011-	1-E5
-61090-	1-E5
-68010-	1-E5
16572-58010-	1-E5
-68010-	1-E5
16577-61040-	1-F5
-61120-	1-F5
16582-61010-	1-F5
16583-61010-	1-F5
16584-61010-	1-F5
16585-61010-	1-F5
16586-61010-	1-F5
16630-47020-	2-B12
16711-58010-	1-F5
-58011-	1-F5
-58040-	1-F5
-61111-	1-F5
-61151-	1-F5
-68010-	1-F5
17061-61020-	1-F6
17100-61052-	1-I5
-61081-	1-I5
-61082-	1-I5
17111-56060-	1-I5
-56080-	1-I5
-56130-	1-I5
-68022-	1-I5
-68050-	1-I5
17140-68010-	1-I5
17141-56030-	1-I5
-56031-	1-I5
-56050-	1-I5
17151-61020-	1-J5
-68010-	1-J5
17152-61010-	1-J5
17167-56020-	1-J5
-56022-	1-J5
-61012-	1-J5
-68010-	1-J5
17168-58021-	1-J5
-61014-	1-J5
-68020-	1-J5
17169-61011-	1-J5
17171-61010-	1-J5
-68011-	1-J5
17172-56020-	1-J5
-56021-	1-J5
-56022-	1-J5
-61030-	1-J5
17173-56020-	1-J5
-56021-	1-J5
-56022-	1-J5
S -58010-	1-J5
17173-68010-	1-J5
17231-61012-	1-K5
17232-61013-	1-J5
-61014-	1-K5
17303-61011-	1-A7
17306-61021-	1-J6
17314-61031-	1-H6
17317-61020-	1-D5
	1-H6
17318-61040-	1-H6
17341-61021-	1-I6
17342-61030-	1-I6
17343-61020-	1-I6
17344-61011-	1-I6
17345-61020-	1-J6
17346-61020-	1-J6
17361-61020-	1-J6
17400-61020-	1-B6
-61021-	1-B6
17401-56080-	1-B6
-58050-	1-B6
-61120-	1-B6
-68020-	1-B6
17405-58050-	1-B6
-68060-	1-B6
17410-61160-	1-B6
-61190-	1-B6
17420-56050-	1-B6
-56051-	1-B6
-58240-	1-B6
17430-56260-	1-B6
-56261-	1-B6
-61160-	1-B6
-61170-	1-B6
17505-61040-	1-C6
-61050-	1-C6
-61060-	1-C6
17551-61030-	1-C6
17552-61050-	1-C6
17563-61030-	1-B6
17567-61030-	1-B6
	1-C6
17571-56040-	1-B6
-58090-	1-B6
-61090-	1-B6
-61150-	1-B6
-68010-	1-B6
-68020-	1-B6
17572-56130-	1-B6
-58050-	1-B6
-61040-	1-B6
17574-61050-	1-C6
-61060-	1-C6
17583-61050-	1-C6
17590-61051-	1-C6
17610-61030-	1-H6
17691-61011-	1-A7
17692-61010-	1-A7
17700-61023-	1-F6
-68010-	1-F6
-68011-	1-F6
-68140-	1-F6
S -68210-	1-F6
17705-61023-	1-F6

PART NUMBER	LOCATION
17705-68010-	1-F6
-68100-	1-F6
17728-24030-	1-F6
17751-61030-	1-F6
17781-61010-	1-F6
17791-56170-	1-B7
-61022-	1-B7
-61023-	1-B7
17792-61033-	1-B7
17801-61010-	1-F6
-66020-	1-F6
-68020-	1-F6
17810-61010-	1-A7
17841-61011-	1-F6
-68010-	1-F6
17845-61011-	1-F6
-68010-	1-F6
17848-61020-	1-F6
17853-38010-	1-E5
17881-34040-	1-I6
-58010-	1-F6
-58090-	1-F6
-61010-	1-F6
-68010-	1-F6
17882-58010-	1-G6
-58070-	1-G6
17885-56010-	1-F6
-58070-	1-F6
18491-61010-	1-B6
19000-58010-	1-D1
-58011-	1-D1
-58012-	1-D1
-58340-	1-D1
-58380-	1-D1
-61200-	1-D1
-61210-	1-D1
N -68180-	1-D1
19100-61092-	1-G7
-61102-	1-G7
19101-61101-	1-G7
-61102-	1-G7
19102-43060-	1-G7
-45150-	1-G7
-61091-	1-G7
-61102-	1-G7
19105-61091-	1-G7
19114-61011-	1-G7
-61030-	1-G7
19115-50010-	1-G7
19121-27020-	1-G7
-41140-	1-G7
19122-45070-	1-G7
-88262-	1-G7
19127-41141-	1-G7
-52020-	1-G7
19144-61091-	1-G7
19151-61100-	1-G7
19152-45060-	1-G7
19153-61091-	1-G7
-61102-	1-G7
19154-61091-	1-G7
-61102-	1-G7
19169-32010-	1-G7
19181-61091-	1-G7
19181-70010-	1-G7
19195-61100-	1-G7
19220-61091-	1-G7
-61102-	1-H7
19242-61091-	1-H7
-61100-	1-H7
-61102-	1-H7
19250-61100-	1-H7
-61102-	1-H7
19519-38030-	1-D7
19850-68010-	1-D7
-68030-	1-D7
-68060-	1-D7
19871-56020-	1-D7
-68011-	1-D7
19905-40010-	1-H7
21024-61010-	1-M8
21054-61020-	1-A9
-61140-	1-A9
21062-61021-	1-B9
-61060-	1-B9
21100-61102-	1-J8
-61140-	1-J8
-61141-	1-J8
-61142-	1-J8
21112-61112-	1-M8
-61140-	1-M8
21165-61010-	1-M8
21191-61140-	1-M8
21192-61020-	1-M8
21205-61011-	1-M8
21209-33011-	1-M8
21271-61061-	1-M8
-61140-	1-M8
21272-61140-	1-M8
21273-30052-	1-M8
-38010-	1-M8
-61140-	1-M8
21291-34320-	1-M8
21301-61023-	1-M8
-61050-	1-M8
21304-61060-	1-M8
21313-11020-	1-M8
21314-11020-	1-M8
21346-61140-	1-M8
21351-34030-	1-A9
21353-61020-	1-A9
21392-61020-	1-A9
21538-31010-	1-A9
21611-22010-	1-A9
21614-60200-	1-A9
21617-30010-	1-A9
21618-14010-	1-A9
21622-61010-	1-A9
21633-24030-	1-A9
21641-38310-	1-M8
21645-33080-	1-A9
21649-33080-	1-A9
-38010-	1-B9
21655-44101-	1-B9
-60200-	1-A9
21667-61140-	1-A9
21669-61011-	1-A9
-61100-	1-A9
21673-38020-	1-J8
-61140-	1-M8
21699-61010-	1-A9
21722-60200-	1-A9
21723-11041-	1-A9
-21030-	1-A9
-61140-	1-A9
21724-61140-	1-A9
21734-21030-	1-A9
21735-44010-	1-B9
21738-60070-	1-B9
21756-61010-	1-B9
21763-38010-	1-B9
21781-15230-	1-B9
-30020-	1-B9
21791-60010-	1-B9
21826-24470-	1-B9
21832-33010-	1-B9
21834-31140-	1-B9
21842-33010-	1-B9
-60280-	1-B9
21864-26020-	1-M8
21867-25010-	1-B9
21894-61020-	1-B9
21912-61020-	1-J8
-61032-	1-J8
21928-68010-	1-E11
22011-78030-	1-D10
22013-68110-	1-C10
22014-78030-	1-E10
22016-68110-	1-D10
22017-68110-	1-C10
22100-58020-	1-G9
-58021-	1-G9
-58022-	1-G9
-68051-	1-G9
-68130-	1-G9
22102-77021-	1-I9
22103-48030-	1-I9
-77130-	1-I9
22104-68110-	1-I9
-77020-	1-I9
22105-58010-	1-I9
-68010-	1-I9
-68130-	1-I9
22106-46010-	1-I9
22111-68010-	1-I9
22113-77090-	1-A10
22114-47010-	1-I9
-48030-	1-I9
-77130-	1-I9
22115-77020-	1-I9
22116-46010-	1-I9
-68110-	1-I9
22129-78030-	1-D10
22131-77020-	1-I9
22142-77020-	1-I9
22143-77020-	1-I9
22144-46010-	1-I9
22145-46010-	1-I9
22146-56010-	1-I9
-68010-	1-I9
22147-77020-	1-I9
22148-46010-	1-I9

PART NUMBER	LOCATION
22148-68010-	1-I9
22149-76010-	1-J9
22150-67010-	1-I9
22155-76010-	1-J9
22156-76010-	1-J9
22157-48023-	1-J9
22161-76010-	1-J9
22162-76010-	1-J9
22163-76010-	1-J9
22164-76010-	1-J9
22165-76010-	1-J9
22166-76010-	1-J9
22173-46010-	1-J9
22174-47010-	1-J9
22177-56041-	1-J9
-56042-	1-J9
-68010-	1-J9
22178-48024-	1-M9
-56011-	1-M9
22181-56040-	1-J9
22182-46010-	1-J9
22183-46010-	1-J9
22184-46010-	1-J9
22185-46010-	1-J9
22186-46010-	1-J9
-48010-	1-J9
22187-46010-	1-J9
22188-46010-	1-J9
22189-46010-	1-J9
-48031-	1-J9
-48032-	1-J9
-48033-	1-J9
-48034-	1-J9
-48035-	1-J9
-48036-	1-J9
22190-56042-	1-I9
-68010-	1-I9
-68110-	1-I9
22195-48030-	1-J9
-68010-	1-J9
22303-47010-	1-M9
22308-56041-	1-M9
-68020-	1-M9
22311-77130-	1-M9
22318-48030-	1-M9
22319-77010-	1-M9
22320-58010-	1-M9
-58022-	1-M9
-68020-	1-M9
22323-58010-	1-M9
-77010-	1-M9
22326-48030-	1-M9
-58010-	1-M9
22329-77021-	1-M9
-77130-	1-M9
22333-56040-	1-M9
-77130-	1-M9
22336-46010-	1-M9
-68010-	1-M9
22354-77050-	1-A10
	1-C10
	1-E11
22355-36010-	1-A10
	1-C10

PART NUMBER	LOCATION
22355-36010-	1-E11
-76010-	1-E11
22361-76010-	1-A10
22362-76010-	1-A10
22363-76010-	1-A10
22364-76010-	1-A10
22378-76010-	1-A10
22379-68110-	1-C10
22408-68010-	1-M9
-68110-	1-C10
-68120-	1-C10
22410-68110-	1-C10
22411-78030-	1-D10
-78031-	1-E10
-78032-	1-D10
22412-78030-	1-C10
22416-78030-	1-D10
-78031-	1-D10
-78032-	1-E10
-78033-	1-E10
-78034-	1-E10
-78035-	1-E10
22419-58230-	1-C10
22423-78030-	1-E10
22424-68110-	1-C10
22428-78030-	1-C10
22432-68110-	1-C10
-78030-	1-C10
-78031-	1-D10
-78032-	1-E10
-78033-	1-E10
22433-78031-	1-D10
-78032-	1-D10
22437-58230-	1-F10
22440-68110-	1-C10
22442-77130-	1-M9
-77131-	1-M9
-78030-	1-D10
22446-78030-	1-D10
22449-48030-	1-A10
22451-77123-	1-D10
22457-58010-	1-M9
22458-78030-	1-D10
-78031-	1-D10
22481-58230-	1-D10
22490-78030-	1-E10
22501-77021-	1-G10
22510-56040-	1-G10
-77130-	1-G10
22512-77020-	1-G10
22513-77020-	1-G10
22515-77020-	1-G10
-77021-	1-G10
22518-56010-	1-G10
-56011-	1-G10
-56012-	1-G10
-56013-	1-G10
-77020-	1-G10
22519-48010-	1-G10
22521-77020-	1-H10
-77021-	1-H10
22522-77020-	1-H10
22524-77021-	1-H10
22525-77020-	1-H10

PART NUMBER	LOCATION
22526-77020-	1-H10
22527-56010-	1-H10
22528-77020-	1-H10
22529-67010-	1-H10
22535-46010-	1-H10
22551-78030-	1-D10
22554-78030-	1-D10
22555-68110-	1-E10
22557-68110-	1-E10
22558-78030-	1-E10
-78031-	1-D10
22561-78030-	1-F10
22610-56040-	1-J10
-58010-	1-J10
-68011-	1-J10
22611-46010-	1-J9
-68010-	1-J9
22614-56020-	1-J10
-68010-	1-J10
22615-56040-	1-J10
-68012-	1-J10
22616-56030-	1-J10
-68011-	1-J10
22626-56030-	1-J10
-56050-	1-J10
-68010-	1-J10
22628-68011-	1-J10
22629-68010-	1-J10
22692-56040-	1-A10
-56041-	1-A10
-77131-	1-A10
22693-77130-	1-A10
22694-77130-	1-A10
22697-56040-	1-A10
-56041-	1-A10
-77131-	1-A10
22698-77130-	1-A10
-77131-	1-A10
22701-68110-	1-D10
-68120-	1-D10
22702-78030-	1-E10
22703-56040-	1-A10
-68010-	1-A10
22720-68110-	1-D10
22726-58230-	1-E10
22728-78030-	1-E10
22729-78030-	1-E10
22737-78030-	1-C10
-78031-	1-C10
-78032-	1-C10
-78033-	1-C10
-78034-	1-C10
-78035-	1-C10
	1-D10
-78036-	1-C10
	1-D10
-78037-	1-D10
-78038-	1-D10
-78039-	1-D10
22738-78030-	1-E10
22752-78030-	1-E10
-78031-	1-E10
-78032-	1-E10
-78033-	1-E10

PART NUMBER	LOCATION
22752-78034-	1-E10
-78035-	1-E10
-78036-	1-E10
22761-78030-	1-E10
22768-68110-	1-C10
-78031-	1-C10
22774-78030-	1-D10
22776-78032-	1-D10
-78034-	1-F10
22795-77121-	1-F10
22811-56010-	1-G9
-56011-	1-G9
-68010-	1-G9
22812-68010-	1-G9
23100-61070-	1-K10
23300-38010-	1-A11
-56040-	1-A11
-68030-	1-A11
23303-54071-	1-A11
-56031-	1-A11
23311-56040-	1-A11
23312-56021-	1-A11
23319-46010-	1-A11
-48010-	1-A11
23338-54010-	1-A11
23351-46010-	1-A11
-54010-	1-A11
23353-46010-	1-A11
-54010-	1-A11
23600-56011-	1-D9
-68010-	1-D9
-68020-	1-D9
23618-56010-	1-D9
23619-46010-	1-D9
23620-54010-	1-D9
-68010-	1-D9
-68020-	1-D9
23624-47011-	1-D9
-54020-	1-D9
23628-46010-	1-D9
23629-46010-	1-D9
23631-46010-	1-D9
23632-46010-	1-D9
23633-46010-	1-D9
23634-46010-	1-D9
23635-46010-	1-D9
23636-46010-	1-D9
23637-46010-	1-D9
23638-46010-	1-D9
23639-46010-	1-D9
23641-46010-	1-D9
23642-46010-	1-D9
23643-46010-	1-D9
23644-46010-	1-D9
23645-46010-	1-D9
23646-46010-	1-D9
23647-46010-	1-D9
23648-46010-	1-D9
23649-46010-	1-D9
23651-46010-	1-D9
23652-46010-	1-D9
23654-46010-	1-D9
23701-56030-	1-G9
-68010-	1-G9

PART NUMBER	LOCATION
23702-56030-	1-G9
-68010-	1-G9
23703-56020-	1-G9
-68010-	1-G9
23704-56020-	1-G9
-68010-	1-G9
23705-68010-	1-G9
23706-68010-	1-G9
23741-46010-	1-G9
-48010-	1-G9
-56010-	1-G9
23742-46010-	1-G9
23760-56020-	1-D9
-56021-	1-D9
-56022-	1-D9
-68010-	1-D9
-56040-	1-A11
-68030-	1-A11
-56050-	1-E9
-68012-	1-E9
23801-56040-	1-G9
-56060-	1-G9
-68030-	1-G9
23802-56040-	1-G9
-68020-	1-G9
23811-61032-	1-I8
23820-61060-	1-I8
23841-56010-	1-G9
-61021-	1-I8
23842-56010-	1-G9
-61031-	1-I8
23921-61021-	1-A11
23930-58020-	1-A11
23941-58010-	1-A11
-58011-	1-A11
23942-58010-	1-A11
25601-61040-	1-B11
25602-61030-	1-B11
25618-61011-	1-B11
25620-61071-	1-B11
25628-61020-	1-B11
-61031-	1-B11
25631-61030-	1-B11
25680-61030-	1-C11
25706-68010-	1-A7
25709-61010-	1-A7
25710-61021-	1-J6
25716-61011-	1-J6
25870-61011-	1-C11
26100-58020-	1-E11
-58021-	1-E11
-58022-	1-E11
-68012-	1-E11
-68030-	1-E11
26102-58020-	1-E11
-58021-	1-F11
26111-58022-	1-F11
-68011-	1-E11
-68012-	1-E11
26112-56050-	1-F11
26113-56050-	1-F11
-58020-	1-F11
-58021-	1-F11
-68012-	1-F11
-68013-	1-F11

PART NUMBER	LOCATION
26114-76010-	1-F11
26115-76010-	1-F11
26116-76010-	1-F11
26117-68011-	1-F11
26118-48014-	1-F11
26119-56030-	1-F11
26124-56030-	1-F11
-58020-	1-F11
-58021-	1-F11
-68010-	1-F11
26131-58020-	1-F11
-58022-	1-F11
-58023-	1-F11
-58024-	1-F11
-68010-	1-F11
-68011-	1-F11
26132-56010-	1-F11
-56011-	1-F11
26133-68030-	1-E11
26171-56020-	1-F11
-68010-	1-F11
27020-56190-	1-K7
-56240-	1-K7
-57071-	1-K7
-61071-	1-K7
-61081-	1-K7
-61100-	1-K7
-61130-	1-K7
-68150-	1-K7
27036-68150-	1-K7
27039-15010-	1-K7
-18011-	1-K7
27062-45050-	1-K7
27212-39050-	1-K7
27310-15030-	1-L7
-38061-	1-L7
-45110-	1-L7
-56110-	1-L7
-56180-	1-L7
-57061-	1-L7
-61070-	1-L7
-68140-	1-L7
27312-56070-	1-K7
-57060-	1-K7
27313-57060-	1-L7
27315-56070-	1-L7
-57060-	1-L7
27330-26050-	1-L7
-45020-	1-L7
-45090-	1-L7
-54060-	1-L7
-56190-	1-L7
-64030-	1-L7
-68150-	1-L7
27332-57060-	1-K7
27350-56110-	1-L7
-57061-	1-L7
-68140-	1-L7
27351-38051-	1-L7
-56013-	1-M7
27353-57070-	1-M7
-68150-	1-M7
27356-54170-	1-M7
-57070-	1-M7

PART NUMBER	LOCATION
27356-68150-	1-M7
27359-35040-	1-M7
-45122-	1-M7
-45140-	1-M7
27362-61100-	1-M7
-70010-	1-M7
-70011-	1-M7
27370-57070-	1-M7
27371-31011-	1-M7
-56070-	1-M7
27372-31011-	1-M7
-56070-	1-M7
27373-57070-	1-M7
-57120-	1-M7
27388-57070-	1-M7
-68140-	1-M7
27410-11030-	1-M7
-53120-	1-M7
-41080-	1-M7
-57070-	1-M7
-68150-	1-M7
27411-57060-	1-M7
-57061-	1-M7
-60032-	1-M7
-68140-	1-M7
S 27412-15150-	1-K7
-31040-	1-L7
-45070-	1-K7
-54040-	1-K7
-57060-	1-L7
27441-34030-	1-M7
-45110-	1-M7
-54040-	1-M7
-54070-	1-M7
-56090-	1-A8
27700-13060-	1-A8
-38100-	1-A8
-57050-	1-A8
-57060-	1-A8
27790-13010-	4-B3
-57010-	4-B3
28011-26042-	1-D8
-54010-	1-D8
-60041-	1-D8
28100-47090-	1-D8
-56110-	1-D8
-56111-	1-D8
-56190-	1-D8
-60042-	1-D8
-60070-	1-D8
28110-60042-	1-D8
-60070-	1-D8
28111-46011-	2-E8
-51011-	1-D8
28113-41011-	1-D8
28114-41011-	1-D8
28115-47070-	1-D8
-56080-	1-D8
-56180-	1-D8
28117-41020-	1-D8
28118-77090-	1-D8
28119-77090-	1-D8
28120-26070-	1-D8
-42020-	1-D8
28120-47040-	1-D8
-56110-	1-D8
-56111-	1-D8
-77090-	1-D8
28121-42020-	1-D8
28123-41020-	1-D8
28125-41020-	1-D8
28126-33021-	1-D8
28130-34060-	1-D8
-41020-	1-D8
-46030-	1-D8
-54010-	1-E8
-56080-	1-E8
-60042-	1-D8
28131-20010-	1-E8
28132-40010-	1-E8
28136-40010-	1-E8
28138-40010-	1-E8
28139-47070-	1-E8
-77090-	1-E8
28140-26070-	1-E8
-41020-	1-E8
-77090-	1-E8
28142-10011-	1-E8
-25011-	1-E8
28143-40010-	1-E8
-46012-	2-E8
28150-34080-	1-E8
-47090-	1-E8
-56060-	1-E8
-56190-	1-E8
-60040-	1-E8
28160-26070-	1-E8
-41020-	1-E8
-47040-	1-E8
-77090-	1-E8
28162-41022-	1-E8
28163-40011-	1-F8
28165-26040-	1-F8
-77090-	1-F8
28166-41011-	1-E8
28172-41021-	1-F8
28199-77090-	1-D8
28222-77090-	1-F8
28228-26040-	1-F8
-56080-	1-F8
28229-26040-	1-F8
-56080-	1-F8
28253-45020-	1-E8
28254-45020-	1-F8
-77090-	1-F8
28300-54020-	4-B3
-54070-	4-B3
-56020-	4-B3
28521-54021-	4-B3
-57020-	4-B3
-57060-	4-B3
-68051-	4-B3
28540-68010-	4-I3
28571-56120-	4-I3
-56150-	4-I3
28579-56030-	4-I3
28590-56090-	4-I3
-56100-	4-I3
28610-54090-	4-B3
-54180-	4-B3
-57010-	4-B3
-57011-	4-B3
-57050-	4-B3
-57060-	4-B3
28611-57010-	4-B3
28621-57020-	4-B3
-57021-	4-B3
-64011-	4-B3
28624-57010-	4-C3
-68011-	4-C3
28631-57020-	4-C3
-68010-	4-C3
28800-45030-	4-L1
-45050-	4-L1
-46012-	4-L1
-61010-	4-L1
-61030-	4-L1
28897-38010-	4-M1
-45040-	4-M1
-54020-	4-M1
-54030-	4-M1
28898-26010-	4-M1
29300-56070-	1-H8
-57011-	1-H8
-68010-	1-H8
29311-76010-	1-H8
29331-56010-	1-H8
-56070-	1-H8
29369-54010-	1-H8
-56070-	1-H8
31104-60020-	1-E2
31111-60030-	1-E2
-60031-	1-E2
-60032-	1-E2
-60050-	2-F2
-60070-	2-F2
-60140-	2-F2
-60170-	2-F2
-60190-	2-F2
31121-60021-	2-F2
31126-36030-	2-B1
-60021-	2-B1
-60030-	2-B1
31131-60010-	1-E2
31132-60020-	1-F2
31133-60020-	1-F2
31134-60020-	1-F2
31135-60020-	1-F2
31136-60010-	1-F2
31137-60010-	1-F2
31201-39097-	2-B1
-39115-	2-B1
-69026-	2-B1
-69027-	2-B1
31204-60030-	2-B1
-60050-	2-B1
-60060-	2-B1
-60070-	2-B1
-60080-	2-B1
31210-36072-	2-B1
-36090-	2-B1
-36100-	2-B1

PART NUMBER	LOCATION
31210-60041-	2-B1
-60042-	2-B1
-60070-	2-B1
31216-36010-	2-B1
-60010-	2-B1
31221-39085-	2-B1
-39125-	2-B1
-69025-	2-B1
31231-60040-	2-B1
-60050-	2-B1
-60060-	2-B1
-60070-	2-B1
-60080-	2-B1
31232-60020-	2-B1
31236-36010-	2-B1
-60020-	2-B1
-60030-	2-B1
31238-60041-	2-B1
31250-36113-	2-C1
-60020-	2-C1
-60040-	2-C1
-60080-	2-C1
-60090-	2-C1
-60100-	2-C1
N -60140-	2-C1
31301-60080-	2-E1
-60081-	2-E1
31321-36010-	2-E1
	2-K12
31401-60010-	2-H1
-60020-	2-H1
31402-20010-	2-H1
-30030-	2-H1
-35010-	2-H1
31410-40060-	2-H1
-60280-	2-H1
31426-20610-	2-H1
-30011-	2-H1
31436-60020-	2-K1
31438-30010-	2-K1
31440-35010-	2-H1
-60020-	2-K1
-60050-	2-K1
-60060-	2-K1
31449-60010-	2-L1
31451-30030-	2-H1
-60050-	2-H1
31453-22010-	2-H1
-22010-	2-I1
-30011-	2-H1
	2-I1
31454-30030-	2-I1
31458-60010-	2-L1
31459-60020-	2-I1
-60030-	2-I1
31470-60050-	2-B2
-60031-	2-B2
-60100-	2-B2
-60110-	2-B2
-60120-	2-B2
31473-30020-	2-B2
-60061-	2-B2
-60080-	2-B2
-60090-	2-B2
31473-60100-	2-B2
31476-30020-	2-B2
31476-36010-	2-B2
-40010-	2-B2
-60031-	2-B2
-60050-	2-B2
-60060-	2-B2
31478-30010-	2-B2
	2-I13
	2-L13
31479-60030-	2-B2
31481-60250-	2-E1
-60270-	2-E1
-60301-	2-E1
-60311-	2-E1
-60320-	2-E1
-60321-	2-E1
-60330-	2-E1
-60331-	2-E1
31488-60030-	2-L1
32000-36010-	2-K3
32101-60020-	2-K3
32116-60020-	2-K3
32117-60020-	2-K3
32904-60020-	2-M5
32905-60020-	2-M5
S 32907-60021-	2-M5
32923-36010-	2-M5
32924-60020-	2-M5
32925-60020-	2-M5
32928-60020-	2-M5
32929-60020-	2-M5
32941-60020-	2-A6
32942-60020-	2-A6
32943-60010-	2-A6
33020-60901-	2-D2
33030-60171-	2-D2
-60172-	2-D2
-60300-	2-D2
-60310-	2-D2
-60410-	2-D2
-60450-	2-D2
-60620-	2-D2
N -60670-	2-D2
33046-60010-	2-M2
33102-60060-	2-B3
-60080-	2-B3
33111-60040-	2-F2
-60041-	2-F2
-60060-	2-F2
-60070-	2-F2
-60080-	2-F2
33118-36020-	2-G2
-60010-	2-A4
	2-G2
33119-36020-	2-G2
-60010-	2-A4
	2-G2
33122-36011-	2-B3
-60010-	2-B3
33124-36010-	2-H6
33131-60020-	2-G2
33132-36010-	2-G2
-60020-	2-G2
33142-60020-	2-G2
	2-H6
-60030-	2-H6
-60040-	2-H6
33151-60010-	2-G2
33201-36030-	2-B3
33202-60021-	2-C3
-60030-	2-C3
33203-60010-	2-C3
33211-36011-	2-B3
33212-36020-	2-B3
-60030-	2-B3
33213-60040-	2-B3
-60050-	2-B3
33214-60021-	2-B3
33222-36030-	2-B3
33223-36010-	2-B3
-36020-	2-B3
33225-36030-	2-B3
33226-36011-	2-B3
-60010-	2-C3
33233-60020-	2-C3
33241-60031-	2-C3
-60050-	2-C3
33242-60020-	2-C3
-60030-	2-C3
33243-60051-	2-C3
-60070-	2-C3
33244-60010-	2-C3
33245-60031-	2-C3
33251-60021-	2-C3
-60030-	2-C3
33261-60020-	2-D3
33280-60010-	2-D3
33306-36016-	2-K2
-36020-	2-K2
33309-60010-	2-G6
-60020-	2-G6
-60040-	2-G6
-60070-	2-G6
33311-60041-	2-K2
-60060-	2-K2
-60080-	2-K2
-60120-	2-K2
N -60130-	2-K2
33318-36012-	2-K2
33321-60051-	2-K2
-60070-	2-K2
-60080-	2-K2
33324-60020-	2-C6
33325-60010-	2-G6
-60020-	2-G6
33332-36012-	2-K2
-60020-	2-L2
33333-60020-	2-L2
-60030-	2-L2
33335-60011-	2-L2
-60020-	2-L2
33336-60010-	2-L2
33343-36020-	2-L2
33346-30010-	2-L2

	PART NUMBER	LOCATION
	33348-36012-	2-L2
	33362-36021-	2-L2
	33364-36051-	2-L2
	33366-36020-	2-L2
	33368-20012-	2-L2
	33371-20010-	2-L2
	33391-36010-	2-L2
	33394-36011-	2-L2
	33395-36010-	2-L2
	33398-36011-	2-L2
	-36012-	2-L2
	33402-36021-	2-L2
	-36050-	2-L2
	-60020-	2-L2
	33403-69065-	2-B4
	-69075-	2-H2
	33404-30040-	2-B4
		2-H2
	33411-60041-	2-M2
	-60042-	2-M2
N	-60070-	2-M2
	33421-36040-	2-M2
	-60060-	2-M2
	33451-36022-	2-M2
	33481-60050-	2-J6
	-60060-	2-J6
	33489-30020-	2-B4
		2-H2
	33502-60040-	2-G3
	33503-60020-	2-G3
	33504-22111-01	2-G3
	-60030-	2-G3
	-60040-	2-G3
	33505-60010-	2-H3
	-60011-	2-H3
	33511-60060-	2-G3
	33521-60020-	2-D3
	33530-60060-	2-G3
		2-H3
	-60140-	2-H3
	-60160-	2-H3
	-60180-	2-G3
	33531-36040-	2-D3
	33541-60120-	2-G3
	-60180-	2-G3
	33542-30110-13	2-G3
	-30110-36	2-G3
	33548-60010-	2-B7
	-60020-	2-H3
	33554-60021-	2-H3
	33555-55011-	2-H3
	-60040-	2-H3
	33621-60110-	3-K8
	-60200-	3-K8
	-60230-	3-K8
	33623-22060-	2-H3
	33625-22020-	2-H3
	33631-60020-	2-H3
	33711-60050-	2-H3
	33723-22010-	2-H3
	33740-26010-	2-B7
	-35011-	2-B7
S	33789-36010-	2-K9
	34101-60010-	2-C4
	34421-36010-	2-D5
	34601-36010-	2-C4
	34602-36010-	2-C4
	34613-36010-	2-D4
	34710-36010-	2-D4
	34713-36010-	2-D4
	34731-36010-	2-D4
	34732-36010-	2-D4
	34737-36010-	2-D4
	34738-36010-	2-D4
	35000-60030-	2-J3
	35013-60020-	2-M3
	35015-60010-	2-M3
	35052-60010-	2-L5
	35055-60010-	2-L5
	35068-36010-	2-J4
	35073-60010-	2-K4
	35103-60020-	2-M3
	35104-60010-	2-M3
	35106-60010-	2-M3
	35111-60010-	2-M3
	35112-36010-	2-D5
	35113-36010-	2-D5
	35114-36010-	2-D5
	35115-36010-	2-D5
	35136-60010-	2-A4
	35138-60010-	2-A4
	35143-36010-	2-A4
	35144-36010-	2-A4
	35146-36010-	2-M4
	35168-36010-	2-A4
	35182-36010-	2-A4
	35211-36010-	2-D5
	35212-36010-	2-D5
	35213-36010-	2-E5
	35215-36010-	2-E5
	35216-36010-	2-E5
	35219-60010-	2-E5
	35222-60010-	2-E5
	35223-36010-	2-E5
	35226-36010-	2-E5
	35231-36010-	2-E5
	35301-36010-	2-K3
	35303-60010-	2-E5
	35308-36010-	2-K3
	35313-36010-	2-L3
	35321-36010-	2-L3
	-36020-	2-L3
	35322-36010-	2-L3
	-36020-	2-L3
	35339-36010-	2-E5
	35394-30011-	2-A4
	35395-36010-	2-M4
	35396-36010-	2-E5
	35405-36010-	2-E5
	35408-36010-	2-E5
	35409-36010-	2-E5
	35415-36010-	2-E5
	35416-36010-	2-E5
	35417-36010-	2-E5
	35418-36010-	2-E5
	35419-36010-	2-E5
	35420-60011-	2-F5
	35422-22010-	2-F5
	35422-36010-	2-F5
	35423-36010-	2-F5
	35424-36010-	2-F5
	35425-22010-	2-F5
	-36010-	2-F5
	35427-36010-	2-L3
	35428-60010-	2-F5
	35429-36010-	2-F5
	35430-60020-	2-F5
	35432-60010-	2-F5
	35433-36010-	2-F5
	35434-36010-	2-F5
	35435-36011-	2-F5
	35436-36011-	2-F5
	35437-36011-	2-G5
	35438-60010-	2-G5
	35440-36010-	2-G5
	35444-36010-	2-G5
	35445-36010-	2-G5
	35451-36010-	2-G5
	35452-36010-	2-G5
	35454-36010-	2-G5
	35455-36010-	2-G5
	35456-36010-	2-H5
	35458-36010-	2-H5
	35459-36010-	2-H5
	35462-36010-	2-H5
S	35463-36010-	2-H5
	35464-36011-	2-H5
	35466-60010-	2-H5
	35467-36010-	2-H5
	35468-36010-	2-H5
	35472-36011-	2-I5
	35476-36010-	2-I5
	35477-30030-	2-I5
	35479-36010-	2-I5
	35481-36010-	2-M4
	35482-36010-	2-M4
	35483-36010-	2-M4
	35484-36010-	2-M4
	35485-36010-	2-M4
	35486-36010-	2-A5
	35487-36010-	2-A5
	35488-36010-	2-I5
	35489-36010-	2-I5
	35491-36010-	2-I5
	35492-36010-	2-I5
	35495-36010-	2-L3
	35497-36010-	2-I5
	35498-36010-	2-J5
	35501-36010-	2-L5
	35503-60010-	2-L5
	35504-60010-	2-L5
	35505-36010-	2-L5
	35520-60020-	2-L5
	35556-60010-	2-L5
	35557-36010-	2-L5
	35560-36011-	2-J5
	35561-60010-	2-L5
	35569-60050-	2-H3
	35572-60030-	2-L5
	35589-36010-	2-J5
	35595-36010-	2-L5
	35599-36010-	2-J5

	PART NUMBER	LOCATION
	35602-36010-	2-F4
	35606-36010-	2-F4
	35608-36010-	2-C4
		2-H4
	35615-36010-	2-F4
		2-G4
	35617-36010-	2-L3
	-36020-	2-D4
		2-I4
	35621-36010-	2-D4
		2-H4
	35623-36010-	2-J4
	35631-36010-	2-F4
	35632-36010-	2-D4
		2-H4
	-36020-	2-J4
	35633-36010-	2-D4
		2-H4
	-36020-	2-C4
		2-F4
		2-G4
	-36030-	2-J4
	35634-36010-	2-C4
		2-G4
	-36020-	2-G4
	-36040-	2-C4
	-36050-	2-G4
	35651-36010-	2-G4
	35654-36010-	2-G4
	35671-36010-	2-J4
	35672-36010-	2-G4
	35675-36010-	2-D4
	-36010-	2-G4
	-36020-	2-G4
	-36030-	2-G4
	-36040-	2-G4
	35676-36010-	2-D4
		2-H4
	-36020-	2-H4
	-36030-	2-H4
	-36040-	2-H4
	-36070-	2-J4
	-36080-	2-J4
	-36090-	2-J4
	35701-60010-	2-G4
	35706-60010-	2-H4
	35709-36010-	2-I4
	35712-36010-	2-D4
	-36010-	2-G4
	35713-36010-	2-K4
	35719-60010-	2-I4
	35720-60010-	2-K4
	35735-36010-	2-A5
	35737-36010-	2-K4
	35738-60010-	2-L4
	35743-60010-	2-L4
	35748-36010-	2-L4
	35760-60010-	2-L4
	35761-60010-	2-L4
	35762-60010-	2-L4
	35785-36010-	2-E4
		2-I4
	35789-36010-	2-D4
	-36020-	2-C4
	35789-36020-	2-G4
	-36040-	2-K3
	-36050-	2-L3
	-36060-	2-L3
	-36070-	2-D4
	-36090-	2-F4
		2-L4
S	-36070-	2-J6
	-36080-	2-G4
	-36110-	2-G4
	-36120-	2-G4
	-36130-	2-G4
	-36140-	2-G4
N	-60090-	2-J6
	35790-36010-	2-L4
	35791-36010-	2-D4
	35847-36010-	2-J5
	35893-36010-	2-J5
	35906-60030-	2-H3
	35921-60030-	2-H3
	35971-60030-	2-I3
	35972-60020-	2-I3
	35974-60030-	2-I3
	35975-60020-	2-I3
	-60030-	2-I3
	35989-60020-	2-I3
	36100-6A100-	2-E6
	-6A160-	2-E6
N	-6A270-	2-E6
	-6A510-	2-E6
	-6A720-	2-E6
	-6A750-	2-E6
	-60952-	2-E6
	36103-60010-	2-G6
	-60011-	2-G6
	-60050-	2-G6
	-60070-	2-G6
	-60080-	2-G6
S	-60120-	2-G6
	-60140-	2-G6
	-60150-	2-G6
	-60160-	2-G6
	36110-6A740-	2-E6
	-60160-	2-E6
	-60161-	2-E6
	-60162-	2-E6
	-60270-	2-E6
	-60271-	2-E6
	-60630-	2-E6
	36117-60020-	2-G2
	-60030-	2-G2
	36119-60010-	2-H6
	-60020-	2-J6
	-60030-	2-H6
	36122-60040-	2-H6
	36124-60020-	2-H6
	36128-60020-	2-H6
	-60021-	2-H6
	36132-60020-	2-H6
	36134-60020-	2-H6
	36142-60030-	2-H6
	36143-60020-	2-H6
	-60030-	2-H6
	36144-60020-	2-H6
	36152-60030-	2-H6
	36164-60040-	2-D7
	36203-60020-	2-J6
	-60021-	2-J6
	-60050-	2-J6
	36204-60031-	2-J6
	-60040-	2-J6
	-60041-	2-J6
S	-60070-	2-J6
	-60080-	2-J6
	36212-60040-	2-J6
	-60041-	2-J6
	-60080-	2-J6
N	-60090-	2-J6
	36213-60020-	2-J6
	36215-60030-	2-J6
	36221-60041-	2-J6
	-60050-	2-J6
	-60051-	2-J6
	-60080-	2-J6
S	-60090-	2-J6
	36222-60010-	2-K6
	-60020-	2-K6
	36225-60030-	2-K6
	-60050-	2-K6
	36231-60021-	2-K6
	-60050-	2-K6
	36234-60031-	2-K6
	36235-60020-	2-K6
	-60030-	2-K6
	36237-60020-	2-K6
	36241-60080-	2-J6
	36242-60120-	2-J6
	36251-60030-	2-L6
	-60050-	2-L6
N	36302-60100-	2-B7
	36303-60070-	2-A7
	-60080-	2-A7
	-60130-	2-A7
	36307-60030-	2-A7
	-60040-	2-A7
	36308-60050-	2-A7
	-60080-	2-A7
	-60100-	2-A7
	36311-60040-	2-A7
	-60041-	2-A7
	36312-60030-	2-A7
	-60040-	2-A7
	36313-60050-	2-A7
	-60070-	2-A7
	36314-60030-	2-A7
		2-B7
	-60040-	2-A7
	36318-60020-	2-B7
	36321-60061-	2-B7
	-60080-	2-B7
	-60130-	2-B7
	36322-60110-	2-B7
	-60111-	2-B7
	36323-60060-	2-B7
	-60080-	2-B7
	36324-60050-	2-A7
		2-B7
	36327-60030-	2-B7
	-60031-	2-B7
	-60040-	2-B7

PART NUMBER	LOCATION
36337-60040-	2-A7
-60060-	2-A7
-60080-	2-D7
36338-60020-	2-B7
-60030-	2-B7
36340-60050-	2-B7
-60060-	2-B7
-60080-	2-B7
36341-60030-	2-B7
-60031-	2-B7
-60032-	2-B7
36343-60010-	2-D7
-60020-	2-B7
-60040-	2-D7
36360-60220-	2-B7
36362-60011-	2-C7
-60020-	2-C7
-60040-	2-C7
36409-60040-	2-F7
-60050-	2-F7
36410-60030-	2-D7
36416-36010-	2-D7
36422-36010-	2-D7
36426-60010-	2-C6
36482-60100-	2-F7
-60110-	2-F7
36483-60090-	2-F7
36486-60010-	2-D7
36610-60080-	2-C6
36611-60040-	2-C6
36621-60010-	2-C6
36622-60010-	2-C6
36631-60010-	2-C6
36633-60010-	2-C6
36701-60030-	2-C6
36714-60020-	2-C6
36721-60020-	2-C6
36722-60020-	2-C6
36723-60050-	2-C6
36726-60010-	2-C6
	2-L6
-60020-	2-L6
36811-60030-	2-D6
36814-60031-	2-D6
36824-60030-	2-D6
37110-36520-	2-I7
-60240-	2-I7
-60241-	2-I7
-60330-	2-I7
-60410-	2-I7
37140-60120-	2-I7
-60121-	2-I7
-60122-	2-I7
-60161-	2-I7
-60162-	2-I7
-60200-	2-I7
-60220-	2-I7
37199-60020-	3-K8
37302-36010-	2-I7
-36020-	2-I7
-60040-	2-I7
-60050-	2-I7
37305-25010-	2-I7
-36010-	2-I7
37305-36020-	2-I7
-60010-	2-I7
37315-36010-	2-I7
-36020-	2-I7
37341-30010-	2-D10
	2-L8
37402-10020-	2-C11
-36060-	2-I7
-36080-	2-J7
37701-60010-	2-J7
37711-60020-	2-J7
37712-60020-	2-J7
37713-60010-	2-J7
37714-60010-	2-J7
-60020-	2-J7
37715-60010-	2-J7
38101-60040-	2-A8
38102-60040-	2-A8
38103-60040-	2-A8
38105-60040-	2-A8
-60041-	2-A8
38106-60040-	2-A8
38110-60070-	2-A8
-60071-	2-A8
-60072-	2-A8
38113-60040-	2-A8
38116-60010-	2-B8
38118-60040-	2-B8
38121-60040-	2-B8
38122-60040-	2-B8
38127-60040-	2-B8
38131-60040-	2-B8
38133-60040-	2-B8
38134-60040-	2-B8
38137-60040-	2-B8
38143-60010-	2-B8
38151-60040-	2-B8
38152-60040-	2-B8
38153-60040-	2-B8
38182-60040-	2-B8
38183-60040-	2-B8
-60041-	2-C8
38184-60040-	2-C8
-60041-	2-C8
38185-60040-	2-C8
-60041-	2-C8
38186-60040-	2-C8
38187-60040-	2-C8
38191-60010-	2-C8
38192-60010-	2-C8
38193-60010-	2-C8
38202-60040-	2-C8
-60041-	2-C8
38203-60040-	2-C8
38205-60040-	2-C8
38211-60040-	2-C8
38214-60040-	2-C8
38216-60040-	2-C8
-60041-	2-C8
38217-60040-	2-C8
38218-60040-	2-D8
38221-60040-	2-D8
38223-60040-	2-D8
38225-60040-	2-D8
38226-60040-	2-D8
38228-60040-	2-D8
38229-60040-	2-D8
38232-60040-	2-D8
-60041-	2-D8
38234-60040-	2-D8
38236-60040-	2-D8
38237-60040-	2-D8
38286-60010-	2-J8
38302-60010-	2-J8
38314-60060-	2-D8
38321-60010-	2-D8
38322-60040-	2-D8
38323-60040-	2-D8
38324-60040-	2-D8
38325-60070-	2-E8
38329-60040-	2-E8
38334-60040-	2-E8
38340-60040-	2-E8
-60050-	2-E8
38600-60010-	2-E8
38601-60010-	2-E8
38602-60010-	2-E8
38603-60010-	2-E8
38610-60010-	2-E8
38611-60010-	2-E8
38612-60010-	2-E8
38613-60010-	2-E8
38614-60010-	2-E8
38616-60010-	2-F8
38617-60010-	2-F8
38621-60010-	2-F8
38622-60010-	2-F8
38623-60010-	2-F8
38625-60010-	2-F8
38626-60010-	2-F8
38627-60010-	2-F8
38628-60010-	2-F8
	2-G3
38629-60010-	2-F8
38630-60040-	4-D3
-60060-	4-D3
38640-60010-	2-F8
38641-60010-	2-F8
38642-60010-	2-F8
38655-90A00-	4-C2
38656-90A00-	4-C2
-90A01-	4-C2
38659-60010-	2-F8
41101-60021-	2-C10
	2-J8
-60040-	2-C10
	2-J8
S -60080-	2-C10
S	2-J8
41110-60026-	2-B10
	2-J8
-60027-	2-B10
	2-J8
-60028-	2-C10
	2-J8
-60061-	2-J8
-60100-	2-B10
	2-C10
41110-60100-	2-J8
-60110-	2-C10
	2-J8
S -60220-	2-C10
S	2-J8
S -60230-	2-C10
S	2-J8
41114-35010-	2-C10
	2-K8
S -60010-	2-C10
S	2-K8
41201-69095-	2-D10
	2-K8
-69155-	2-D10
	2-K8
-69156-	2-D10
-69156-	2-K8
-69166-	2-D10
	2-K8
41204-60010-	2-D10
	2-L8
-60030-	2-D10
	2-L8
41214-26010-	2-F10
	2-L8
-30010-	2-F10
	2-L8
-40010-	2-F10
	2-L8
41226-35010-	2-F10
	2-L8
41231-60020-	2-A10
-60020-	2-L8
41252-35010-	2-D10
	2-L8
41301-60011-	2-M8
S -60020-	2-C10
S	2-M8
41306-60010-	2-A9
41311-36010-	2-C10
	2-M8
41315-30010-	2-D10
	2-M8
41316-30010-	2-C10
	2-M8
41331-35020-	2-D10
	2-M8
-60010-	2-M8
S -60020-	2-D10
S	2-M8
41341-55012-	2-D10
	2-M8
-60010-	2-M8
41342-55010-	2-D10
	2-M8
S -60010-	2-D10
S	2-M8
S -60020-	2-D10
S	2-M8
41343-55010-	2-D10
	2-M8
S -60010-	2-A10
S	2-M8
41344-35010-	2-A9
41345-35010-	2-A9
41346-35010-	2-A9
41347-35010-	2-A9
41348-35010-	2-A9
41351-35011-	2-A9
	2-D10
-60010-	2-A9
41361-60010-	2-A9
	2-D10
-60020-	2-A9
	2-D10
-60030-	2-A9
	2-D10
-60040-	2-A9
	2-D10
-60051-	2-A9
-60061-	2-A9
-60071-	2-A9
-60081-	2-A9
-60091-	2-A9
-60101-	2-A9
-60111-	2-A9
-60121-	2-A9
-60131-	2-A9
-60141-	2-A9
-60151-	2-A9
-60161-	2-A9
-60171-	2-A9
-60181-	2-A9
S 41375-60010-	2-A10
S	2-A9
41385-60011-	2-A9
41387-60010-	2-A9
41388-60010-	2-A9
S 41451-60010-	2-A10
S	2-A9
S 41453-60010-	2-A10
S	2-A9
S 41456-60010-	2-A10
S	2-A9
S 41460-60010-	2-A10
S	2-A9
S 41464-60010-	2-A10
S	2-B9
S 41465-60010-	2-B10
S	2-B9
S 41466-60010-	2-B10
S	2-B9
41991-60010-	2-B9
42109-60050-	2-B9
42110-60170-	2-B9
-60190-	2-B9
-60191-	2-B9
-60192-	2-B9
N -60193-	2-B9
-60210-	2-B9
-60230-	2-B9
N -60301-	2-B9
42137-55010-	2-B9
42181-36010-	2-C10
	2-C9
S -60030-	2-C10
S	2-C9
42183-35010-	2-C9
42306-60050-	2-C9
-60051-	2-C9
42311-60052-	2-E9
-60060-	2-E9
S -60080-	2-E9
42312-60050-	2-E9
-60060-	2-E9
42323-60010-	2-E9
	2-H10
-60020-	2-F14
42325-55010-	2-E9
42411-60011-	2-E9
42419-60011-	2-F9
42420-60070-	2-F9
42427-60020-	2-F9
-60021-	2-F9
42428-60011-	2-F9
42431-60020-	2-E9
42441-30010-	2-F9
42443-55020-	2-F9
S 42506-60010-	2-J9
S 42511-60010-	2-J9
S 42512-60010-	2-J9
S 42513-60010-	2-J9
S 42514-60010-	2-J9
S 42515-60010-	2-J9
S 42516-60010-	2-J9
S 42517-60010-	2-J9
S 42518-60010-	2-J9
S 42521-60010-	2-J9
S 42522-60010-	2-J9
S 42523-60010-	2-J9
N 42531-60030-	2-J9
N 42532-60030-	2-J9
S 42533-60010-	2-J9
N 42534-60030-	2-J9
S 42535-60010-	2-K9
S 42537-60010-	2-K9
S 42538-60010-	2-K9
S 42540-60010-	2-K9
S 42541-60010-	2-K9
S 42550-60010-	2-K9
S 42560-60010-	2-K9
S 42562-60010-	2-K9
42601-60082-	2-G9
	2-H9
-60130-05	2-G9
	2-H9
-60150-	2-G9
	2-H9
42603-35080-	2-H9
-35090-	2-H9
-60010-	2-H9
-60011-	2-H9
-60012-	2-H9
-60020-	2-H9
-60021-	2-H9
-60030-	2-H9
-60040-	2-H9
-60050-	2-H9
-60051-	2-H9
-60052-	2-H9
-60060-	2-H9
-60061-	2-H9

	PART NUMBER	LOCATION
	42652-35100-	2-H9
	-35170-	2-H9
	-60011-	2-H9
	-60022-	2-H9
	-60030-	2-H9
	-60040-	2-H9
	43110-60140-	2-B10
	-60142-	2-B10
	-60143-	2-B10
N	-60144-	2-B10
	-60150-	2-B10
	-60152-	2-B10
N	-60211-	2-B10
N	-60260-	2-B10
	43204-60020-	2-E14
	43209-60010-	2-B10
	-60011-	2-B10
	-60030-	2-B10
	-60031-	2-B10
	-60060-	2-B10
	43211-60050-	2-E14
	43212-60050-	2-E14
	43232-35010-	2-E14
	-60021-	2-E14
	43233-60011-	2-E14
	43234-60011-	2-E14
	43235-60010-	2-E14
	43236-60010-	2-E14
	43237-60030-	2-E14
	43401-60012-	2-F14
	43405-60015-	2-G10
	-60016-	2-G10
	43411-60020-	2-G10
	43412-35010-	2-G10
S	-60050-	2-G10
	43422-60010-	2-E9
		2-H10
	-60020-	2-E9
		2-H10
	43435-60011-	2-F14
	43436-60011-	2-F14
	43502-60020-	2-I10
	43509-60013-	2-H10
	-60015-	2-H10
N	43512-60040-	2-I10
	-69015-	2-I10
	-69016-	2-I10
	43521-60011-	2-I10
	43530-69016-	2-I10
	-69017-	2-I10
	-69045-	2-I10
	43531-60010-	2-I10
	43532-60010-	2-I10
	44104-22011-	2-M10
	44105-30050-	2-M10
	-30060-	2-M10
	44107-60040-	2-M10
	-60060-	2-M10
	44108-60010-	2-A11
	44110-60050-	2-A11
	-60051-	2-A11
	-60120-	2-A11
	-60121-	2-A11
	44111-60020-	2-A11
	44111-60040-	2-A11
	44115-22020-	2-B11
	-60010-	2-B11
	44116-22020-	2-B11
	-60010-	2-B11
	44120-60040-	2-B11
	-60041-	2-B11
	-60050-	2-B11
	-60090-	2-B11
	44142-22010-	2-B11
	-22020-	2-B11
	44302-12010-	2-H11
	-14010-	2-H11
	-30020-	2-H11
	44303-22011-	2-H11
		2-I11
	-22021-	2-H11
		2-I11
	44304-30022-	2-I11
	-35040-	2-I11
	-60020-	2-I11
	44305-30020-	2-I11
	-60010-	2-I11
	44306-60030-	2-L11
	-60031-	2-L11
	-60040-	2-L11
	-60041-	2-L11
	-60060-	2-L11
	-60070-	2-L11
	44307-22010-	2-K11
	-22020-	2-K11
	44308-35030-	2-K11
	-60010-	2-K11
	44311-60010-	2-I11
	-60030-	2-I11
	-60040-	2-I11
	-60050-	2-I11
	44312-12010-	2-I11
	44313-12010-	2-I11
	-12020-	2-I11
	-12030-	2-I11
	-12040-	2-I11
	-12050-	2-I11
	44320-60030-	2-I11
	-60040-	2-I11
	-60060-	2-I11
	-60061-	2-I11
	-60070-	2-I11
	-60071-	2-I11
	-60080-	2-I11
	-60090-	2-I11
	-60110-	2-I11
	44325-12010-	2-J11
	-12020-	2-J11
	-12030-	2-J11
	-12040-	2-J11
	-12050-	2-J11
	-30030-	2-I11
	-30040-	2-I11
		2-J11
	44329-30010-	2-J11
	-30020-	2-J11
	44330-30100-	2-J11
	-30110-	2-J11
	44330-30120-	2-J11
	-30130-	2-J11
	-30140-	2-J11
	-30150-	2-J11
	-60010-	2-J11
	-60020-	2-J11
	-60030-	2-J11
	-60040-	2-J11
	-60050-	2-J11
	-60060-	2-J11
	44337-60020-	2-J11
	44338-60020-	2-K11
	44341-12010-	2-K11
	-30020-	2-K11
	44343-12010-	2-K11
	-30020-	2-K11
	44344-30010-	2-K11
	44345-12010-	2-L11
	-12020-	2-L11
	-12030-	2-L11
	-12040-	2-L11
	-12050-	2-L11
	44346-30020-	2-K11
	44348-60070-	2-B12
	44350-60010-	2-B12
	44360-60011-	2-L11
	44381-60011-	2-B12
	-60020-	2-B12
	44391-30010-	2-L11
	-30020-	2-L11
	44410-60040-	2-B12
	-60041-	2-B12
	-60070-	2-B12
	-60130-	2-B12
	-60160-	2-B12
	44411-60130-	2-B12
	-60131-	2-B12
	44416-60060-	2-C12
	-60061-	2-C12
	44420-60070-	2-B12
	44443-60010-	2-C12
	-60020-	2-C12
	-60040-	2-C12
	-60060-	2-C12
	-60071-	2-C12
	44446-60010-	2-C12
	44457-60100-	2-C12
S	44580-22030-	2-F13
	44601-30350-	2-F13
	44605-22021-	2-F13
	44606-12520-	2-F13
		2-L1
	-30350-	2-F13
	-32010-	2-K1
	44608-22090-	2-F13
	-30350-	2-F13
	44609-30350-	2-F13
	44610-60100-	2-F13
	-60150-	2-F13
	-60151-	2-F13
	-60400-	2-F13
	-60421-	2-F13
	-60440-	2-F13
N	-60441-	2-F13
	44621-28120-	2-F13
		2-L1
	44628-28120-	2-F13
		2-L1
	44632-60100-	2-F13
N	-60441-	2-F13
	44633-22020-	2-F13
	-30350-	2-F13
	44635-10010-	2-K1
	-12480-	2-K1
	-28120-	2-F13
	44642-25080-	2-F13
	-60020-	2-K1
	-60280-	2-F13
	-87502-	2-K1
	44645-22020-	2-F13
	44658-30350-	2-F13
	44659-30350-	2-F13
	44672-22120-	2-L1
	44673-30350-	2-F13
	44678-22020-	2-F13
	44704-60050-	2-G13
	-60060-	2-G13
	-60130-	2-G13
	-60140-	2-G13
N	-60160-	2-G13
	44730-22050-	2-G13
	-22090-	2-G13
	-60040-	2-G13
		2-K1
	44763-60020-	2-H13
	44767-60020-	2-G13
	44771-60020-	2-G13
	-60040-	2-G13
	44772-14032-	2-G13
	44773-22020-	2-H13
	-60060-	2-H13
	44777-60010-	2-G13
	-60080-	2-G13
	44785-14010-	2-L1
	-35020-	2-H13
	44786-60030-	2-G13
	45025-60020-	2-D11
	45044-69035-	2-G12
	-69055-	2-G12
	45045-69035-	2-G12
	-69045-	2-G12
	45046-69115-	2-G12
	45047-69065-	2-G12
	45081-22020-	2-B11
	45082-60010-	2-F11
	45100-22160-03	2-E12
	-22160-06	2-E12
S	-60060-03	2-E12
	-60070-	2-E12
	-60150-03	2-E12
	-60150-16	2-E12
	45105-60010-	2-E12
	45125-60020-03	2-E12
	-60020-06	2-E12
N	-60030-	2-E12
	45130-22110-03	2-E12
	-22110-06	2-E12
	45130-60020-	2-E12
	-60030-	2-E12
	-60090-03	2-E12
	-60090-06	2-E12
N	-60090-16	2-E12
	45131-22070-	2-E12
		2-F12
	-60040-	2-E12
		2-F12
	-60050-	2-E12
		2-F12
	-60060-	2-E12
		2-F12
	45136-26020-	2-F12
	45146-22050-	2-F12
	45176-20030-	2-F12
	45194-60010-	2-F12
	45210-22050-	2-C11
	45215-22011-	2-C11
	45220-60050-	2-C11
	45222-60020-	2-C11
	-60030-	2-C11
S	-60031-	2-C11
	45240-60020-	2-C11
	45243-60010-	2-D11
	45244-60020-	2-C11
		2-D11
	45254-60030-	2-D11
	45255-60010-	2-D11
	45260-60031-	2-D11
	-60080-	2-D11
	45280-22191-	2-D11
	-22200-	2-D11
	-60130-	2-D11
N	-60250-	2-D11
	45282-22010-	2-D11
	45283-22020-	2-D11
	45286-60130-	2-D11
	-60130-03	2-D11
	-60130-06	2-D11
	-60130-16	2-D11
	45287-60090-	2-D11
	-60090-03	2-D11
	-60090-06	2-D11
	-60090-16	2-D11
	45289-22020-	2-F11
	45292-60030-	2-E11
	45301-60050-	2-E11
	45304-60020-	2-E11
	45305-60010-	2-D11
	45310-60060-	2-E11
	45332-37010-	2-E11
	45351-60030-	2-E11
	45352-37010-	2-E11
	45353-37010-	2-E11
	45354-37010-	2-E11
	45357-22010-	2-B11
	-36010-	2-E11
	45411-60090-	2-B11
		2-E11
	45450-69035-	2-G12
	-69055-	2-G12
	45457-60010-	2-G12
	45458-60010-	2-G12
	45460-69105-	2-H12
	45466-36010-	2-H12
	-55010-	2-G12
	-55020-	2-G12
	45473-35010-	2-H12
	45475-35010-	2-H12
	45611-60040-	2-H12
	45612-60040-	2-H12
	45636-60020-	2-E11
	-60040-	2-E11
	-60080-	2-E11
S	-60090-	2-E11
	45637-60030-	2-E11
		2-F11
	-60040-	2-F11
	-60060-	2-F11
	45700-69025-	2-H12
	45721-60030-	2-H12
	45804-22010-	2-F11
	45813-22010-	2-F11
	-22020-	2-F11
	-22030-	2-F11
	-22040-	2-F11
	-22050-	2-F11
	45814-22010-	2-F11
	-22020-	2-F11
	45815-22060-	2-F11
	-22070-	2-F11
	-22080-	2-F11
	-22090-	2-F11
	-22100-	2-F11
	45817-60010-	2-F11
	45819-22011-	2-F11
	45821-22010-	2-C11
	45870-60030-	2-C11
	45890-22050-	2-F11
	45897-12030-	2-D11
	-14010-	2-D11
	45898-22010-	2-F11
	45899-22020-	2-F11
	46210-60040-	2-I12
	-60040-01	2-I12
	-60040-06	2-I12
	-60040-16	2-I12
	46217-10020-01	2-I12
	-10020-26	2-I12
	-10020-56	2-I12
	46243-60030-	2-I12
	-60030-01	2-I12
	-60030-06	2-I12
	-60030-16	2-I12
	46341-31010-	2-I12
	46410-60100-	2-J12
	-60101-	2-J12
	46443-12020-	2-J12
	46451-60030-	2-J12
	46458-30020-	2-J12
	46469-60010-	2-J12
	47043-60050-	2-K13
	47044-60010-	2-K13
	47061-60010-	2-L13
	-60011-	2-L13
	47062-60010-	2-L13
	-60011-	2-L13

	PART NUMBER	LOCATION
	47101-60090-	2-K12
	-60091-	2-K12
	-60150-	2-K12
	47121-30050-	2-K12
	47159-30100-	2-C14
	-30110-	2-C14
	-30150-	2-C14
	47190-14020-	2-C14
	-30030-	2-C14
	-60010-	2-C14
N	-60020-	2-C14
	47201-60130-	2-A13
	-60220-	2-A13
	-60340-	2-A13
	47202-60040-	2-A13
	-60090-	2-A13
S	47218-12040-	2-A13
	47230-20040-	2-H1
	47231-20010-	2-A13
		2-H1
	-30010-	2-A13
		2-H1
	47232-30010-	2-A13
		2-H1
	47234-14010-	2-A13
	47264-22010-	2-A13
	47265-20050-	2-A13
		2-I1
	-20060-	2-A13
	47275-14010-	2-H1
	-22010-	2-B13
	47280-14010-	2-B13
	-30030-	2-B13
	47299-14010-	2-B13
	-20010-	2-B13
	47311-30320-	2-C14
	-30330-	2-C14
	-30400-	2-C14
	47312-60210-	2-C14
	-60211-	2-C14
	-60290-	2-C14
	-60291-	2-C14
	-60292-	2-C14
	-60442-	2-C14
	47313-60090-	2-C14
	-60091-	2-C14
	-60110-	2-C14
	-60111-	2-C14
	47315-60260-	2-C14
	-60261-	2-C14
N	-60262-	2-C14
	-60270-	2-C14
	-60271-	2-C14
N	-60340-	2-C14
	47316-60140-	2-C14
	-60141-	2-C14
	-60150-	2-C14
	-60151-	2-C14
	-60210-	2-C14
N	-60211-	2-C14
N	-60310-	2-C14
	47321-30050-	2-D14
	-30120-	2-D14
	-60100-	2-D14

	PART NUMBER	LOCATION
	47322-60110-	2-D14
	-60111-	2-D14
	-60190-	2-D14
	-60191-	2-D14
	-60192-	2-D14
	-60282-	2-D14
	47323-60030-	2-D14
	-60031-	2-D14
	47325-60010-	2-D14
	-60011-	2-D14
N	-60100-	2-D14
	47326-60010-	2-D14
	-60011-	2-D14
N	-60110-	2-D14
	47341-60030-	2-D14
	-60031-	2-D14
	47343-60020-	2-D14
	-60021-	2-D14
	47354-60030-	2-D14
	47355-60030-	2-D14
	47371-35020-	2-D14
	47372-35010-	2-D14
	47378-60040-	2-D14
	47447-60010-	2-K13
	47449-30020-	2-L13
	47491-20011-	2-L13
	47509-60010-	2-L13
	47547-12010-	2-B2
	-12030-	1-A11
	-20030-	2-I13
	-60020-	2-L13
N	47550-60120-	2-L13
	-69105-	2-L13
	47611-60010-	2-L13
	47612-60010-	2-L13
	47616-60010-	2-L13
	47624-60010-	2-L13
	47625-60010-	2-L13
	47626-60010-	2-L13
	47628-35010-	2-M13
	-35020-	2-M13
	47633-35010-	2-M13
	-35020-	2-M13
	47643-60010-	2-M13
	47644-60010-	2-M13
	47655-60010-	2-M13
	47703-60020-	2-J13
	47704-60020-	2-J13
	47730-60021-	2-I13
	47731-30020-	2-I13
	47732-30010-	2-I13
	47748-60010-	2-I13
	47750-60021-	2-J13
	47786-60020-	2-J13
	47787-60020-	2-J13
	48046-60040-	2-A15
	-60050-	2-A15
	-60051-	2-A15
	48047-60040-	2-A15
	-60050-	2-A15
	-60051-	2-A15
	48048-60020-	2-K14
	48049-60020-	2-K14
	48102-60160-	2-I14

	PART NUMBER	LOCATION
	48102-60170-	2-I14
	-60171-	2-I14
	-60220-	2-I14
	-60221-	2-I14
	-60370-	2-I14
	48103-60160-	2-J14
	-60170-	2-J14
	-60171-	2-J14
	-60220-	2-J14
	-60221-	2-J14
	-60370-	2-J14
	48104-60320-	2-J14
	48110-60160-	2-I14
		2-J14
	-60170-	2-I14
		2-J14
	-60171-	2-I14
		2-J14
	-60220-	2-I14
		2-J14
	-60221-	2-I14
		2-J14
	-60370-	2-I14
		2-J14
	48111-60160-	2-I14
	-60170-	2-I14
	-60171-	2-I14
	-60220-	2-I14
	-60221-	2-I14
	-60370-	2-I14
	48112-60160-	2-I14
	-60170-	2-I14
	-60171-	2-I14
	-60220-	2-I14
	-60221-	2-I14
	-60370-	2-I14
	48114-60160-	2-J14
	-60170-	2-I14
		2-J14
	-60171-	2-I14
	-60220-	2-I14
		2-J14
	-60221-	2-I14
	-60370-	2-J14
	48116-60160-	2-J14
	48141-35021-	2-C15
		2-J14
	-60081-	2-C15
	-60081-	2-J14
	48142-60081-	2-C15
		2-J14
	-60121-	2-C15
		2-J14
	-60280-	2-C15
	48147-60170-	2-J14
S	48191-60030-	2-J14
	48202-60240-	2-B15
	-60250-	2-B15
	-60270-	2-B15
	-60280-	2-B15
	-60400-	2-B15
	-60410-	2-B15
	48203-60250-	2-B15
	-60280-	2-B15

	PART NUMBER	LOCATION
	48203-60400-	2-B15
	-60410-	2-B15
	48210-60240-	2-C15
	-60250-	2-C15
	-60270-	2-A15
	-60280-	2-A15
	-60400-	2-C15
	-60410-	2-A15
	48211-60240-	2-B15
	-60250-	2-B15
	-60270-	2-B15
	-60280-	2-B15
	-60400-	2-B15
	-60410-	2-B15
	48212-60240-	2-B15
	-60250-	2-B15
	-60270-	2-B15
	-60280-	2-B15
	-60400-	2-B15
	-60410-	2-B15
	48213-60240-	2-B15
	-60270-	2-B15
	48214-60250-	2-B15
	-60280-	2-B15
	-60400-	2-B15
	-60410-	2-B15
	48215-60240-	2-B15
	-60270-	2-B15
	48216-60240-	2-B15
	-60250-	2-B15
	-60270-	2-B15
	-60280-	2-B15
	-60400-	2-B15
	-60410-	2-B15
	48217-60400-	2-C15
	-60410-	2-C15
	48241-60250-	2-C15
	48247-25160-	2-J14
S	-27340-	2-J14
	-29210-	2-C15
	-60250-	2-C15
	-60380-	2-C15
	48252-26070-	2-C15
		2-J14
	48253-15010-	2-C15
	48304-60030-	2-J14
	-60031-	2-J14
	48306-60030-	2-C15
	48334-60010-	2-J14
	48371-60010-	2-C15
	-60020-	2-C15
	-60030-	2-C15
	-60040-	2-C15
	48372-23030-	2-C15
	48401-60020-	2-J14
	48412-60020-	2-J14
	-60021-	2-K14
	48413-60030-	2-J14
		2-K14
	-60031-	2-K14
	-60032-	2-K14
	48414-60040-	2-C15
	-60041-	2-C15
	-60042-	2-C15

	PART NUMBER	LOCATION
	48415-60040-	2-C15
	-60041-	2-C15
	-60042-	2-C15
	48416-60030-	2-C15
		2-D15
	48475-60020-	2-D15
		2-K14
	48511-69055-	2-K14
	-69065-	2-K14
	-69066-	2-K14
	48512-60030-	2-K14
	48531-60081-	2-D15
	-60160-	2-D15
	-69065-	2-D15
	48541-60020-	2-D15
	48802-60020-	2-D15
	48811-60010-	2-K14
N	-60011-	2-K14
	48812-60020-	2-D15
	48815-20030-	2-K14
	-20060-	2-D15
	48817-30010-	2-L14
	48823-27010-	2-D15
		2-L14
	48825-60010-	2-L14
	-60030-	2-D15
	-60031-	2-D15
	51001-60580-	3-B1
	-60581-	3-B1
	-60603-	3-B1
	-60620-	3-B1
	-60621-	3-B1
	-60622-	3-B1
	-60640-	3-B1
	-60641-	3-B1
	-60680-	3-B1
	-60681-	3-B1
	-60682-	3-B1
	51002-60451-	3-B1
	-60500-	3-B1
	-60510-	3-B1
	51041-60010-	3-B1
	-60020-	3-B1
	51042-60010-	3-B1
	-60020-	3-B1
	51201-60080-	3-B1
	51202-60070-	3-B1
	-60071-	3-B1
	-60072-	3-B1
	-60150-	3-B1
	51203-60100-	3-B1
	-60101-	3-B1
	-60102-	3-B1
	51204-60050-	3-C1
	-60051-	3-C1
	-60052-	3-C1
	51205-60010-	3-B1
	51209-60090-	3-B1
	51217-60010-	3-B1
	-60011-	3-B1
	51218-60010-	3-B1
	-60011-	3-B1
	51281-60060-	3-B1
	51321-60011-	3-B1

	PART NUMBER	LOCATION
	51321-60030-	3-B1
	51322-60011-	3-B1
	-60030-	3-B1
N	51401-60021-	3-C1
	51405-60020-	3-E1
	-60060-	3-E1
	51421-60040-	3-C1
	-60060-	3-C1
	-60061-	3-C1
	51422-60040-	3-C1
N	-60052-	3-C1
	-60060-	3-C1
	-60061-	3-C1
	51441-60060-	3-E1
	-60061-	3-E1
	-60070-	3-E1
	51443-60030-	3-E1
	-60050-	3-E1
	-60051-	3-E1
	-60100-	3-E1
	51444-60040-	3-E1
	-60041-	3-E1
	-60060-	3-E1
	-60070-	3-E1
	51449-60010-	3-E1
	51495-60070-	3-E1
	-60090-	3-E1
	-60091-	3-E1
	-60140-	3-E1
	51496-60040-	3-E1
	51701-60050-	3-C1
	-60051-	3-C1
	51702-60020-	3-C1
	51703-60020-	3-C1
	51704-60010-	3-C1
	51705-60060-	3-C1
	-60061-	3-C1
	-60062-	3-C1
	-60110-	3-C1
	51707-60030-	3-C1
	51709-60020-	3-C1
	51737-60020-	3-C1
	51900-60100-	3-F1
	51961-36040-	3-E1
	-60010-	3-E1
	51965-60010-	3-E1
	51966-60010-	3-E1
	51980-60010-	3-E1
	51985-60011-	3-E1
	51987-60010-	3-E1
	-60030-	3-E1
	52023-60011-	3-H1
		3-I1
	52102-60010-	3-K1
	52103-60010-	3-K1
	52106-60010-	3-L1
	52107-60010-	3-L1
	52111-60110-	3-J1
	-60120-	3-J1
	-60130-	3-J1
	-60131-	3-J1
	-60140-	3-J1
	-60141-	3-J1
	52130-60010-	3-J1

PART NUMBER	LOCATION
52130-60011-	3-J1
52131-60020-	3-K1
52140-60010-	3-J1
-60011-	3-J1
52141-60030-	3-J1
52142-60030-	3-J1
52151-60030-	3-L1
-60031-	3-L1
-60040-	3-L1
-60041-	3-L1
52153-60060-	3-L1
52154-60010-	3-L1
52172-60020-	3-L1
52173-60050-	3-L1
52201-25020-	3-H1
	3-I1
-35021-	3-H1
52202-25020-	3-H1
	3-I1
-35021-	3-H1
52203-60030-	3-H1
	3-I1
52207-60010-	3-H1
52208-60010-	3-H1
52337-90A00-	3-K1
52338-90A00-	3-K1
52341-90A00-	3-K1
-90A01-	3-K1
52342-90A00-	3-K1
-90A01-	3-K1
53111-90A00-	3-M1
-90A01-	3-M1
53131-90A00-	3-M1
-90A01-	3-M1
53132-90A00-	3-M1
-90A01-	3-M1
53162-90500-	3-E2
53180-90A00-	3-E2
53188-90A00-	3-E2
-90A01-	3-E2
53189-90A00-	3-E2
-90A01-	3-E2
53191-90A00-	3-E2
53202-90A01-	3-E2
53203-90A01-	3-E2
N -90A03-	3-E2
53207-90A00-	1-F6
-90A01-	1-F6
53209-90A01-	3-E2
53216-90A00-	3-E2
-90A01-	3-E2
53217-90A01-	3-E2
53301-90A01-	3-A2
53341-90A00-	3-A2
53381-90A00-	3-A2
53382-20011-	3-A2
-30060-	3-A2
-90A00-	3-A2
53383-90A00-	3-M2
53410-90A00-	3-C2
53420-90A00-	3-C2
53440-90A00-	3-C2
53450-90A00-	3-C2
53451-90A00-	3-C2

PART NUMBER	LOCATION
53452-90351-	3-C2
53510-90A01-	3-C2
53523-90A00-	3-C2
53630-90A00-	3-C2
-90A01-	3-C2
53701-90A01-	3-E2
-90A17-	3-E2
-90A30-	3-E2
-90A32-	3-E2
-90A33-	3-E2
-90A40-	3-E2
-90A51-	3-E2
S -90A75-	3-E2
-90G01-	3-E2
-90G06-	3-E2
N -90G13-	3-E2
53702-90A03-	3-E2
-90A14-	3-E2
-90A20-	3-E2
-90A21-	3-E2
-90A24-	3-E2
-90A28-	3-E2
-90A29-	3-E2
-90A69-	3-E2
53738-90A00-	3-E2
53739-90A00-	3-E2
53801-90A02-	3-A2
-90A04-	3-A2
N -90A79-	3-A2
53802-90A02-	3-A2
-90A04-	3-A2
N -90A59-	3-A2
53809-90A00-	1-D5
	1-F6
53903-90A02-	3-B2
-90A03-	3-B2
-90A08-	3-B2
-90A09-	3-M2
55016-90A01-	3-F2
-90A14-	3-F2
-90A16-	3-F2
N -90A34-	3-F2
N -90A36-	3-F2
55073-90A00-	3-L2
55084-90A01-	4-J5
55085-90A01-	4-J5
55086-90A01-	4-J5
55087-90A01-	4-J5
55088-90A01-	4-J5
55089-90A01-	4-J5
55101-90A11-	3-F2
-90A12-	3-F2
-90A15-	3-F2
-90A34-	3-F2
-90A43-	3-F2
-90A44-	3-F2
-90A61-	3-F2
-90A72-	3-F2
-90A74-	3-F2
-90A90-	3-F2
-90G26-	3-F2
-90G41-	3-F2
-90G43-	3-F2
-90G73-	3-F2

PART NUMBER	LOCATION
55101-90G87-	3-F2
-90680-	3-F2
-90682-	3-F2
-90689-	3-F2
55106-90A01-	2-K12
-90A05-	2-K12
-90A07-	2-K12
-90A09-	2-K12
55210-90A04-	3-F2
-90A05-	3-F2
-90A07-	3-F2
-90A09-	3-F2
55223-90A02-	3-F2
-90A03-	3-F2
-90A04-	3-F2
55301-90A09-	3-G2
-90A35-03	3-G2
-90A35-05	3-G2
-90A51-03	3-G2
-90A51-05	3-G2
-90A55-03	3-G2
-90A55-05	3-G2
-90A63-03	3-G2
N -90A63-05	3-G2
55341-90A01-	3-G2
-90A03-	3-G2
55342-90A01-	3-G2
55344-90A01-	3-G2
55351-90A01-	3-G2
-90A03-	3-G2
55357-90A00-	3-H2
55366-90A00-	3-H2
55368-90A00-	3-H2
55401-90A02-03	3-H2
-90A02-06	3-H2
-90A02-16	3-H2
-90A03-03	3-H2
-90A03-06	3-H2
-90A03-16	3-H2
55410-90A01-	3-H2
-90A04-	3-H2
-90A29-03	3-H2
-90A39-	3-H2
-90A60-03	3-H2
N -90G05-03	3-H2
N -90G13-03	3-H2
55412-90A01-03	3-H2
-90A01-05	3-H2
-90A01-13	3-H2
-90A02-05	3-H2
-90A02-13	3-H2
55417-90A00-	3-H2
	3-I2
55446-90A01-03	3-H2
-90A01-05	3-H2
-90A02-03	3-H2
-90A02-05	3-H2
55477-10010-01	3-I2
-90A00-	3-H2
-90A01-	3-H2
55499-60010-	2-I3
55501-90A00-03	3-I2
-90A00-05	3-I2
-90A00-13	3-I2

PART NUMBER	LOCATION
55505-90A00-	3-I2
55508-30020-	3-C4
55513-90A00-	3-I2
55517-14010-	3-I2
55521-90A00-	3-H2
55522-90A00-	3-H2
55524-90A00-	3-I2
55527-90A00-	3-I2
55533-90A00-	3-I2
55539-20020-13	3-C4
-20020-26	3-C4
-32010-01	3-I2
55545-90A00-03	3-I2
-90A00-05	3-I2
-90A00-13	3-I2
55556-90A01-	3-I2
55560-12020-	3-I2
55561-90A00-	3-I2
55569-90A00-03	3-I2
-90A00-05	3-I2
-90A00-13	3-I2
55581-90A02-	3-I2
55650-90A00-	3-I2
55670-90A00-	3-J2
55700-90A05-	3-L2
-90A06-	3-L2
-90A09-	3-L2
-90A19-	3-L2
-90A26-	3-L2
-90A41-	3-L2
-90A44-	3-L2
-90A45-	3-L2
-90A57-	3-L2
N -90A88-	3-L2
55701-90A03-	3-M2
-90A04-	3-L2
-90A08-	3-L2
-90A11-	3-L2
-90A15-	3-M2
N -90A25-	3-M2
55729-90A00-	3-M2
55780-90A01-	3-M2
55793-89105-	3-M2
55852-90A01-	4-J5
55901-90A01-	4-J5
55905-12070-	4-E5
-22050-	4-J5
-90A00-	4-J5
55907-90A00-	4-J5
55908-90A00-	4-J5
55950-90A01-	3-J2
55959-14010-	3-J2
55961-90A00-03	3-K2
-90A00-06	3-K2
-90A00-16	3-K2
55970-90A00-	3-K2
55980-90A00-	3-K2
56111-90A00-	3-M2
-90A02-	3-M2
S 56121-90A00-	3-M2
-90A01-	3-M2
-90A02-	3-M2
-90A03-	3-M2
N 57045-90A01-	3-A3

PART NUMBER	LOCATION
57104-90A00-	3-F2
-90A01-	3-F2
57401-90A01-	3-A3
-90A05-	3-A3
57402-90A01-	3-A3
-90A05-	3-A3
57405-90A00-	3-A3
-90A03-	3-A3
57407-90A00-	3-A3
-90A01-	3-A3
-90A03-	3-A3
-90A04-	3-A3
-90A06-	3-A3
-90A09-	3-A3
N -90A21-	3-A3
N -90A24-	3-A3
57417-90A00-	3-D3
57425-90A00-	3-D3
-90A02-	3-D3
57426-90A00-	3-D3
-90A01-	3-D3
57427-90A00-	3-D3
57468-90A00-	3-D3
-90A01-	3-D3
-90A02-	3-D3
57483-90A00-	3-D3
57505-90A00-	3-D3
N -90A02-	3-D3
N 57506-90A00-	3-D3
N 57507-90A00-	3-D3
57511-90A03-	3-E3
57605-90A01-	3-B3
57606-90A00-	3-B3
-90A03-	3-B3
57635-90A00-	3-B3
-90A02-	3-B3
57805-90A00-	3-I3
58041-90A00-	3-K3
-90A01-	3-K3
58043-90A00-	3-K3
58102-90A00-	3-E3
-90A02-	3-E3
58107-90A00-	3-E3
58111-90A01-	3-E3
-90A02-	3-E3
-90A04-	3-E3
-90A11-	3-E3
-90A13-	3-E3
-90A14-	3-E3
-90A21-	3-E3
-90A25-	3-E3
-90A40-	3-E3
58131-90A00-	3-I3
	3-K3
58132-90A00-	3-K3
58151-90A00-	3-K3
-90A01-	3-K3
S -90A03-	3-K3
58153-90A00-	3-K3
58155-90A00-	3-K3
58169-90A00-	3-E3
58188-90A01-	3-E3
-90A03-	3-E3
58192-90A00-	3-E3

PART NUMBER	LOCATION
58203-90A00-	3-E3
58204-90A00-	3-E3
58211-90A00-	3-E3
-90A02-	3-E3
S -90A07-	3-E3
-90A12-	3-E3
N -90A14-	3-E3
58231-90A00-	3-K3
58232-90A00-	3-K3
58247-90A00-	3-E3
	3-F3
58248-90A00-	3-E3
58261-90A00-	3-F3
-90A01-	3-F3
-90A02-	3-F3
-90A03-	3-F3
-90A04-	3-F3
58263-90A00-	3-F3
-90A01-	3-F3
-90A02-	3-F3
58268-90A00-	3-F3
-90A01-	3-F3
-90A02-	3-F3
-90A03-	3-F3
-90A04-	3-F3
58279-90A00-	3-L9
58280-90A00-	3-F3
-90A01-	3-F3
-90A02-	3-F3
-90A03-	3-F3
-90A04-	3-F3
58289-90A00-	3-F3
58290-90A00-	3-F3
-90A01-	3-F3
-90A02-	3-F3
-90A03-	3-F3
-90A04-	3-F3
58303-90A00-	3-I3
58304-90A00-	3-I3
58305-90A01-	3-I3
-90A08-	3-I3
58306-90A00-	3-I3
-90A04-	3-I3
-90A08-	3-I3
58307-90A00-	3-I3
58308-90A01-	3-I3
-90A02-	3-I3
58311-90A01-	3-I3
-90A05-	3-I3
58315-90A00-	3-I3
58316-90A00-	3-I3
-90A04-	3-I3
58325-90A00-	3-I3
58339-90A00-	3-I3
58343-90A01-	3-I3
58344-90A00-	3-I3
-90A01-	3-I3
58345-90A00-	3-K3
58348-90A00-	3-I3
58367-90A00-	3-I3
58510-90A01-	3-L3
-90A04-	3-L3
-90A11-	3-L3
-90A14-	3-L3
-90A31-03	3-L3

PART NUMBER	LOCATION
58510-90A31-06	3-L3
-90A49-03	3-L3
-90A49-06	3-L3
-90A85-03	3-L3
-90A85-06	3-L3
-90A98-03	3-L3
-90A98-06	3-L3
58540-90A01-	3-M3
-90A03-	3-M3
-90A11-06	3-M3
-90A13-03	3-M3
-90A13-06	3-M3
-90A16-06	3-M3
-90A19-03	3-M3
-90A19-06	3-M3
-90A48-03	3-M3
-90A48-06	3-M3
-90A52-03	3-M3
-90A52-06	3-M3
-90A83-03	3-M3
-90A83-06	3-M3
N -90G14-03	3-M3
N -90G14-06	3-M3
58570-90A00-03	3-M3
-90A00-06	3-A4
	3-M3
-90A00-13	3-M3
-90A00-16	3-M3
-90A28-03	3-A4
-90A28-06	3-A4
N -90A32-03	3-A4
N -90A32-06	3-A4
58573-90A00-	3-M3
58581-90A00-06	3-M3
58705-90A01-	3-E9
58706-90A00-	3-F3
	3-G3
58754-90A00-	3-F3
58781-90A00-	3-E9
58785-90A00-	3-F3
58790-90A00-	3-E9
58803-20010-	3-D4
58810-90A01-03	3-D4
-90A01-06	3-C4
	3-D4
-90A01-13	3-C4
	3-D4
-90A01-16	3-C4
-90A01-16	3-D4
58825-90A00-03	3-D4
-90A00-06	3-D4
-90A00-16	3-D4
-90A01-03	3-D4
-90A01-06	3-D4
58827-20021-	3-D4
58829-90A00-	3-D4
58841-90A01-03	3-D4
-90A01-06	3-D4
58907-90A00-	3-D4
58909-90A00-	3-D4
S 58911-90A02-03	3-D4
S -90A02-06	3-D4
-90A03-03	3-D4
-90A03-06	3-D4

PART NUMBER	LOCATION
S 58911-90A05-03	3-D4
S -90A05-06	3-D4
58918-90A00-	3-E4
58936-60010-	2-I3
S 58944-90A00-03	3-E4
S -90A00-06	3-E4
-90A01-03	3-E4
-90A01-06	3-E4
N 58947-90A03-03	3-E4
N -90A03-06	3-E4
58951-90A00-03	3-D4
-90A00-06	3-D4
-90A00-13	3-D4
-90A00-16	3-D4
-90A01-03	3-E4
-90A01-06	3-E4
58959-16010-	3-E4
58964-30030-	3-E4
-90K00-	3-E4
58965-12010-	3-E4
-20020-	3-E4
58967-90A00-	3-G3
58968-90A00-	3-G3
58969-20010-	3-E4
-90A00-	3-D4
58976-20010-	3-E4
58985-90A00-	3-E4
58995-90A00-	3-C4
58996-90A00-	3-C4
-90A02-	3-C4
-90A04-	3-C4
58997-90A00-	3-C4
-90A01-	3-C4
S -90A02-	3-C4
61027-90A00-	3-F4
-90A04-	3-F4
61028-90A00-	3-F4
-90A04-	3-F4
61031-90A00-	3-H4
-90A02-	3-H4
61032-90A00-	3-H4
61034-90A00-	3-I4
61101-90A00-	3-F4
-90A04-	3-F4
-90A08-	3-F4
61102-90A04-	3-F4
-90A07-	3-F4
61161-90A00-	3-F4
S -90A02-	3-F4
61162-90A00-	3-F4
-90A01-	3-F4
-90A02-	3-F4
61183-90A01-	3-F4
61184-90A00-	3-F4
61197-90A00-	3-G4
61211-90A00-	3-G4
-90A01-	3-G4
-90H00-	3-G4
61212-90A00-	3-G4
-90A01-	3-G4
-90H00-	3-G4
61231-90A00-	3-G4
-90A02-	3-G4
61232-90A00-	3-G4

PART NUMBER	LOCATION
61232-90A01-	3-G4
61263-90A00-	3-G4
61264-90A00-	3-G4
61267-90A00-	3-G4
61268-90A00-	3-G4
61277-90A00-	3-L4
61301-90A02-	3-G4
-90A04-	3-G4
S -90A05-	3-G4
61302-90A04-	3-G4
-90A08-	3-G4
N -90A09-	3-G4
61330-90A00-	3-G4
-90A03-	3-G4
S -90A04-	3-G4
61340-90A02-	3-G4
-90A06-	3-G4
N -90A07-	3-G4
61341-90A00-	3-H4
61342-90A00-	3-H4
61345-90A00-	3-G4
61346-90A00-	3-H4
61401-90A02-	3-H4
-90A03-	3-H4
61402-90A02-	3-H4
-90A06-	3-H4
61503-90A00-	3-G4
61504-90A00-	3-G4
61511-90A01-	3-H4
61512-90A01-	3-H4
61607-90A01-	3-H4
-90A05-	3-H4
61608-90A01-	3-H4
61611-90A01-	3-H4
61612-90A01-	3-H4
61631-90A02-	3-H4
-90A03-	3-H4
61632-90A02-	3-H4
-90A03-	3-H4
61645-90A00-	3-H4
61646-90A00-	3-H4
61705-90A00-	3-H4
-90A03-	3-H4
N -90A15-	3-H4
61706-90A00-	3-H4
-90A02-	3-H4
-90A05-	3-H4
-90A07-	3-H4
-90A18-	3-I4
-90A19-	3-I4
-90A33-	3-I4
-90A35-	3-I4
N -90A46-	3-I4
N -90A47-	3-I4
61709-90A00-	3-I4
-90A01-	3-I4
-90A02-	3-I4
61711-90A00-	3-I4
-90A01-	3-I4
61712-90A00-	3-I4
-90A01-	3-I4
61733-90A00-	3-I4
-90A02-	3-I4
61734-90A00-	3-I4

PART NUMBER	LOCATION
61734-90A03-	3-I4
61743-90A00-	3-I4
-90A02-	3-I4
61744-90A00-	3-I4
-90A01-	3-I4
61745-90A01-	3-I4
61746-90A01-	3-I4
61791-90A00-	3-I4
62101-90A00-03	3-C5
-90A00-06	3-C5
-90A00-16	3-C5
-90A01-	3-C5
62102-90A00-03	3-C5
-90A00-06	3-C5
-90A00-16	3-C5
-90A02-	3-C5
62163-90A00-03	3-C5
-90A00-06	3-C5
-90A00-16	3-C5
62164-90A00-03	3-C5
-90A00-06	3-C5
-90A00-16	3-C5
62313-90A00-03	3-C5
-90A00-06	3-C5
-90A00-16	3-C5
62333-90A00-03	3-C5
	3-D5
-90A00-06	3-C5
	3-D5
-90A00-16	3-C5
	3-D5
62411-90A01-03	3-D5
-90A01-06	3-D5
-90A01-16	3-D5
62412-90A01-03	3-D5
-90A01-06	3-D5
-90A01-16	3-D5
62471-90A00-03	3-D5
-90A00-18	3-D5
62472-90A00-08	3-D5
-90A00-18	3-D5
62510-90A02-	3-D5
-90A03-	3-D5
-90A06-03	3-D5
-90A06-06	3-D5
-90A15-03	3-D5
-90A15-06	3-D5
62520-90A02-	3-D5
-90A02-	3-E5
-90A04-	3-E5
-90A05-	3-D5
	3-E5
-90A06-	3-E5
-90A11-03	3-E5
-90A11-06	3-E5
-90A13-03	3-E5
-90A13-06	3-E5
-90A13-13	3-D5
	3-E5
-90A13-16	3-D5
	3-E5
-90A33-03	3-D5
	3-E5
-90A33-06	3-D5

PART NUMBER	LOCATION
62520-90A33-06	3-E5
-90A46-03	3-E5
-90A46-06	3-E5
62605-90A00-03	3-E5
-90A00-06	3-E5
-90A00-16	3-E5
62613-90A01-03	3-E5
-90A01-06	3-E5
-90A07-03	3-E5
-90A07-06	3-E5
62614-90A00-03	3-F5
-90A00-06	3-F5
-90A00-16	3-E5
	3-F5
62633-90A00-	3-F5
-90A03-08	3-F5
-90A03-18	3-F5
-90A09-08	3-F5
62634-90A00-	3-F5
-90A03-08	3-F5
-90A03-18	3-F5
-90A09-08	3-F5
62638-90A00-	3-G5
62639-90A00-08	3-G5
62640-90A02-03	3-F5
-90A02-06	3-F5
-90A03-03	3-F5
-90A03-06	3-F5
62650-90A01-03	3-F5
-90A01-06	3-F5
62711-90A00-	3-J4
-90A01-	3-J4
N -90A12-	3-J4
62712-90A00-	3-J4
-90A01-	3-J4
N -90A11-	3-J4
62741-90A00-	3-J4
-90A01-	3-J4
62795-90A00-	3-C9
62903-90A00-	3-A5
62904-90A00-	3-A5
62905-69015-	3-A5
62906-69015-	3-A5
62909-22010-	3-A5
63105-90A00-	3-L4
63111-90A00-	3-L4
-90A01-	3-L4
63132-90A00-	3-L4
63141-90A00-	3-L4
63145-90A00-	3-L4
63310-90A01-08	3-G5
-90A01-18	3-G5
-90A07-08	3-G5
N -90A11-08	3-G5
63341-90A01-	3-G5
63342-90A01-	3-G5
63343-90A01-	3-H5
63344-90A01-	3-H5
63345-90A01-	3-G5
63346-90A01-	3-G5
63353-90A00-	3-H5
63354-90A00-	3-H5
63361-90A00-	3-H5
-90A01-	3-H5

PART NUMBER	LOCATION
63361-90A02-	3-H5
63362-90A00-	3-H5
-90A01-	3-H5
-90A02-	3-H5
63363-90A00-	3-H5
-90A01-	3-H5
-90A02-	3-H5
63371-30050-	3-I5
63372-90A00-	3-H5
63378-90A00-	3-I5
63379-90A00-	3-I5
63392-90A00-08	3-I5
-90A00-18	3-I5
63396-90A00-08	3-I5
-90A00-18	3-I5
63397-90A00-08	3-I5
-90A00-18	3-I5
63435-90A00-	3-L4
63436-90A00-	3-L4
63437-90A00-	3-L4
63438-90A00-	3-L4
63439-90A00-	3-L4
63441-90A00-	3-L4
63442-90A00-	3-L4
63443-90A00-	3-L4
63444-90A00-	3-L4
63445-90A00-	3-L4
63447-90A00-	3-L4
63448-90A00-	3-L4
63449-90A00-	3-L4
63457-90A00-	3-L4
63458-90A00-	3-L4
63459-90A00-	3-M4
64777-90A00-	3-E9
64780-90A01-03	3-A7
-90A01-06	3-A7
-90A01-13	3-A7
-90A01-16	3-A7
64798-90A00-	3-A7
65061-90A00-	3-A7
-90A01-	3-A7
-90A03-	3-A7
-90A06-	3-A7
65557-90A01-	3-I3
65706-90A00-	3-D7
65707-90A00-	3-D7
65761-90A00-	3-B7
65766-90A00-	3-B7
65777-90A00-	3-D7
66110-90A00-	3-D7
66301-90A00-	3-I3
66318-90A00-	3-J3
67001-90A04-	3-K5
-90A12-	3-K5
-90A20-	3-K5
-90A31-	3-K5
-90A44-	3-K5
67002-90A04-	3-K5
-90A09-	3-K5
-90A14-	3-K5
-90A19-	3-K5
-90A29-	3-K5
-90A34-	3-K5
-90A47-	3-K5

	PART NUMBER	LOCATION
	67003-90A01-	3-G6
	-90A03-	3-G6
	-90A07-	3-G6
	-90A15-	3-G6
	67004-90A01-	3-G6
	-90A03-	3-G6
	-90A07-	3-G6
	-90A15-	3-G6
	67005-90A01-	3-B7
	-90A02-	3-B7
	-90A04-	3-B7
	-90A05-	3-B7
	-90A07-	3-B7
	-90A08-	3-B7
	-90A14-	3-B7
	-90A16-	3-B7
N	-90A20-	3-B7
	-90A22-	3-B7
	-90A23-	3-B7
	67111-90A05-	3-K5
	-90A15-	3-K5
	67112-90A05-	3-K5
	-90A15-	3-K5
	67113-90A01-	3-G6
	-90A05-	3-G6
	67114-90A01-	3-G6
	-90A05-	3-H6
	67118-90A00-	3-K5
	-90A02-	3-K5
	67207-90A00-	3-D7
	67209-90A00-	3-D7
	67285-90A00-	3-D7
	67286-90A00-	3-D7
	67401-90A00-	3-K5
	67402-90A00-	3-K5
	67403-90A00-	3-K5
	67404-90A00-	3-K5
	67407-90A00-	3-H6
	67408-90A00-	3-H6
	67433-90A00-	3-K5
	67434-90A00-	3-K5
	67481-20010-	3-H6
	-90A00-	3-K5
	67482-20010-	3-H6
	-90A00-	3-K5
	67610-90A02-06	3-L5
	-90A03-03	3-L5
	-90A03-06	3-L5
	-90A08-06	3-L5
	-90A09-03	3-L5
	-90A09-06	3-K5
		3-L5
	-90A53-03	3-L5
	-90A53-06	3-L5
	-90A57-03	3-K5
		3-L5
	-90A57-06	3-K5
		3-L5
S	-90A70-03	3-L5
S	-90A70-06	3-L5
N	-90G01-03	3-L5
N	-90G01-06	3-L5
N	-90G04-03	3-L5
N	-90G04-06	3-L5

	PART NUMBER	LOCATION
	67620-90A02-06	3-L5
	-90A03-03	3-L5
	-90A03-06	3-M5
	-90A08-06	3-L5
	-90A09-03	3-L5
	-90A09-06	3-L5
		3-M5
	-90A49-03	3-L5
	-90A49-06	3-L5
	-90A53-03	3-L5
	-90A53-06	3-L5
S	-90A81-03	3-M5
S	-90A81-06	3-M5
N	-90G04-06	3-M5
N	-90G07-03	3-M5
N	-90G07-06	3-M5
	67630-90A02-06	3-H6
	-90A03-03	3-H6
	-90A03-06	3-H6
	-90A12-03	3-H6
	-90A12-06	3-H6
N	-90A24-03	3-H6
N	-90A24-06	3-H6
	67540-90A02-06	3-H6
	-90A03-03	3-H6
	-90A03-06	3-H6
	-90A12-03	3-H6
	-90A12-06	3-H6
	-90A24-03	3-H6
N	-90A24-06	3-H6
	67651-90A00-03	3-M5
	-90A00-06	3-M5
	-90A00-16	3-M5
S	-90A01-03	3-M5
S	-90A01-06	3-M5
	67687-90A00-	3-B7
	67688-90A00-	3-B7
	67689-90A00-	3-B7
	67765-90A00-	3-B7
	67766-90A00-	3-B7
	67767-90A00-	3-B7
	67768-90A00-	3-B7
	67769-90A00-	3-B7
	67777-22040-16	3-M5
	-22040-23	3-M5
	-22040-36	3-M5
	67778-22030-16	3-M5
	-22030-23	3-M5
	-22030-46	3-M5
	67805-90A01-	3-H6
	67831-90A02-	3-A6
		3-M5
	-90A03-	3-A6
		3-M5
	67832-90A02-	3-A6
		3-M5
	-90A03-	3-A6
		3-M5
	-90A04-	3-A6
		3-M5
	-90A05-	3-A6
		3-M5
	67847-90A01-	3-B7
	67861-90A00-	3-A6
	67862-90A00-	3-A6

	PART NUMBER	LOCATION
	67868-30040-	3-A6
		3-C7
		3-H6
	67871-90A00-	3-H6
	67872-90A00-	3-H6
	67881-90A00-	3-A7
	-90A06-	3-A7
	67913-90A00-03	3-D9
	-90A00-06	3-D9
	-90A00-16	3-D9
	67917-90A00-03	3-D9
	-90A00-06	3-D9
	-90A00-16	3-D9
	68111-90A00-	3-A6
	-90A01-	3-A6
	68112-90A00-	3-A6
	-90A01-	3-A6
	68113-90A00-	3-H6
		3-I6
	-90A01-	3-I6
	68114-90A00-	3-I6
	-90A01-	3-I6
	68123-90A00-	3-I6
	-90A01-	3-I6
	68124-90A00-	3-I6
	-90A01-	3-I6
	68131-90A00-	3-B7
	-90A01-	3-B7
	-90A02-	3-B7
	-90A03-	3-B7
	-90A09-	3-B7
N	-90A19-	3-B7
N	-90A20-	3-B7
N	-90A25-	3-B7
	68141-90A00-	3-A6
S	-90A03-	3-A6
	68142-90A00-	3-I6
	-90A01-	3-I6
	68143-90A00-	3-A6
	-90A01-	3-A6
	68160-90A00-	3-A6
	-90A02-	3-A6
	68170-90A00-	3-A6
	-90A01-	3-A6
	68180-90A00-	3-I6
	-90A01-	3-I6
	68188-90A00-	3-I6
	68189-90A00-	3-I6
	68190-90A00-	3-I6
	-90A01-	3-I6
	68210-90A01-	3-A6
	-90A02-	3-A6
	68211-10030-	3-A6
		3-I6
	-90K00-	3-A6
		3-I6
	68230-90A00-	3-I6
	-90A01-	3-I6
	68281-90A00-	3-B7
	68282-90A00-	3-C7
	68291-90A00-	3-C7
	-90A01-	3-C7
	68610-22010-	3-A6
	68617-12010-	3-B6

	PART NUMBER	LOCATION
	68617-12010-	3-I6
	-22010-	3-B6
		3-I6
	-90A00-	3-B6
		3-I6
	68630-90A00-	3-I6
	68710-14020-	3-E6
	-30080-	3-L6
	68720-14020-	3-E6
	-30020-	3-L6
	68730-14020-	3-E6
		3-L6
	68740-14020-	3-E6
		3-L6
	68810-90A00-	3-D7
	68868-90A00-	3-D7
	68950-69015-	3-D7
		3-E7
	-69025-	3-E7
	68961-12010-	3-D7
S	-23010-	3-D7
	69005-90A00-	3-G7
	-90A04-	3-G7
	-90A17-	3-G7
N	-90A36-	3-G7
	69051-90A00-	3-G7
	-90A03-	3-G7
	69052-90A00-	3-G7
	-90A03-	3-G7
	69055-90A00-	3-G7
	-90A06-	3-G7
	69057-14010-	3-G7
	-90A00-	3-G7
	-90A05-	3-G7
	69058-19065-	3-G7
	-90A02-	3-G7
	69205-20020-	3-C6
		3-J6
	69206-20020-	3-C6
		3-J6
	69210-90A00-	3-C6
	69212-90A00-	3-F7
	69220-90A00-	3-C6
	69230-90A00-	3-J6
	69240-90A00-	3-J6
	69260-12010-03	3-E6
		3-L6
	-12010-26	3-E6
		3-L6
	-12010-26	3-L6
	-12010-46	3-E6
		3-L6
	69266-22010-08	3-E6
		3-L6
	69273-30020-	3-C6
		3-J6
	69277-16040-06	3-C6
		3-J6
	-16040-23	3-C6
		3-J6
	-16040-36	3-C6
		3-J6
	69289-90A00-	3-E7
	69310-90A00-	3-C6
	69320-90A00-	3-C6

	PART NUMBER	LOCATION
	69330-90A00-	3-J6
	69340-90A00-	3-J6
	69350-90A02-	3-E7
	-90A03-	3-E7
	69380-90A00-	3-E7
	69390-90A00-	3-E7
	69410-22030-	3-C6
		3-J6
	69430-90A01-	3-E7
	69450-90A00-	3-E7
	69460-90A00-	3-E7
	69513-14010-	3-H7
	-90A00-	3-H7
	69551-13020-	3-H7
	69563-90A00-	3-H7
	69581-14010-	3-H7
	69681-20040-	3-H7
	69690-90A00-	3-E7
	-90A01-	3-E7
	69705-90A00-	3-E7
	69706-90A00-03	3-E7
	-90A00-06	3-E7
	69711-90A00-	3-C6
	69712-90A00-	3-D6
	69713-90A00-	3-K6
	69714-90A00-	3-K6
	69722-90A00-	3-E7
	69736-22020-	3-D6
		3-K6
	-22021-	3-D6
		3-K6
	-90K00-	3-D6
		3-K6
	-90K00-	3-K6
	69741-20020-03	3-D6
		3-K6
	-20020-16	3-D6
		3-E7
		3-K6
	-90A00-03	3-E7
	-90A00-06	3-E7
	-90A00-16	3-E7
	-90K00-03	3-D6
		3-K6
	-90K00-06	3-D6
		3-K6
	69747-20020-	3-E7
	-20020-01	3-E7
	69749-12010-	3-D6
	-12010-	3-E7
		3-K6
S	69751-20030-01	3-E7
	-20031-03	3-E7
	-20031-06	3-E7
	-20031-26	3-E7
	-20040-	3-H6
		3-M5
	-90A00-06	3-D6
		3-K6
	69759-30021-	3-D6
		3-K6
	69764-90A00-	3-E7
	69767-90A00-	3-E7
	69770-90A00-	3-J6
		3-K6

	PART NUMBER	LOCATION
	69770-90A02-	3-J6
		3-K6
	69780-90A00-	3-K6
	-90A02-	3-K6
	69810-90A00-	3-E6
	-90A02-	3-E6
	69820-90A00-	3-E6
	-90A02-	3-E6
	69830-90A00-	3-L6
	-90A01-	3-L6
	69840-90A00-	3-L6
	-90A01-	3-L6
	69901-90A00-	3-F6
	-90A03-	3-F6
	69902-90A02-	3-F6
	69905-90A00-	3-M6
	-90A02-	3-M6
	-90A03-	3-M6
	69906-90A00-	3-M6
	-90A02-	3-M6
	-90A03-	3-M6
	69971-90A00-	3-F6
	-90A01-	3-F6
	69975-90A00-	3-M6
	-90A01-	3-M6
	71023-90A02-	3-J7
	71071-90A00-	3-J7
	-90A02-01	3-J7
	-90A02-06	3-J7
		3-K7
	-90A02-16	3-J7
	-90A04-	3-J7
	-90A07-	3-J7
N	-90A35-01	3-J7
N	-90A35-06	3-J7
	71072-90A07-01	3-J7
	-90A07-06	3-J7
	-90A07-16	3-J7
N	-90A18-03	3-K7
N	-90A18-06	3-K7
	71073-90A04-	3-K7
	-90A06-01	3-K7
	-90A06-06	3-K7
	-90A06-16	3-K7
	-90A14-	3-K7
	-90A16-	3-K7
N	-90A44-03	3-K7
N	-90A44-06	3-K7
	71075-90A00-06	3-K7
	-90A02-01	3-K7
	-90A02-06	3-K7
	-90A02-16	3-K7
N	-90A14-01	3-K7
N	-90A14-05	3-K7
N	-90A18-03	3-K7
N	-90A18-06	3-K7
	71077-90A00-	3-K7
	-90A02-01	3-K7
	-90A02-06	3-K7
	-90A20-01	3-K7
	-90A20-06	3-K7
	-90A20-16	3-K7
N	-90A41-03	3-K7
N	-90A41-06	3-K7

	PART NUMBER	LOCATION
	71301-90A00-	3-L7
	71307-90A00-	3-L7
	71309-90A00-	3-L7
	71354-90A00-	3-L7
	71410-90A00-	3-L7
	-90A02-	3-L7
	-90A04-	3-L7
	-90A05-	3-L7
	-90A08-01	3-L7
	-90A08-06	3-L7
	-90A08-16	3-L7
	-90A10-	3-L7
N	-90A33-03	3-L7
N	-90A33-06	3-L7
	71420-90A00-	3-L7
	-90A02-	3-L7
	-90A06-01	3-L7
	-90A06-06	3-L7
	-90A06-16	3-L7
	-90A08-	3-L7
N	-90A31-03	3-L7
N	-90A31-06	3-L7
	71430-90A00-01	3-M7
	-90A00-06	3-L7
		3-M7
	-90A00-16	3-L7
		3-M7
	-90A01-	3-L7
	-90A08-	3-L7
	-90A10-	3-L7
N	-90A39-06	3-M7
	71440-90A00-01	3-M7
	-90A00-06	3-L7
		3-M7
	-90A00-16	3-M7
	-90A01-	3-L7
		3-M7
N	-90A37-03	3-L7
N	-90A37-06	3-M7
	71460-90A00-	3-M7
	-90A02-01	3-M7
	-90A02-06	3-M7
	-90A02-16	3-M7
N	-90A70-01	3-M7
N	-90A70-05	3-M7
N	-90A76-03	3-M7
N	-90A76-06	3-M7
	71480-90A00-	3-M7
	-90A02-01	3-M7
	-90A02-06	3-M7
	-90A02-16	3-M7
	-90A64-01	3-M7
	-90A64-06	3-M7
N	-90A80-01	3-M7
N	-90A80-05	3-M7
N	-90A90-03	3-M7
N	-90A90-06	3-M7
	71521-90K00-	3-M7
	71739-90A00-	3-M7
	71812-30010-	3-M7
	71825-90A00-03	3-A8
	-90A00-06	3-A8
	-90A00-16	3-A8
	71826-90A00-03	3-A8

	PART NUMBER	LOCATION
	71826-90A00-06	3-A8
	-90A00-16	3-A8
	71827-90A00-03	3-A8
	-90A00-06	3-A8
	-90A00-16	3-A8
	71828-90A00-03	3-A8
	-90A00-06	3-A8
	-90A00-16	3-A8
	71829-90A00-03	3-A8
	-90A00-06	3-A8
	-90A00-16	3-A8
	71835-90A00-03	3-A8
	-90A00-06	3-A8
	-90A00-16	3-A8
	71836-90A00-03	3-A8
	-90A00-06	3-A8
	-90A00-16	3-A8
	71837-90A00-03	3-A8
	-90A00-06	3-A8
	-90A00-16	3-A8
	-90A01-03	3-B8
	-90A01-06	3-B8
	71887-90A00-01	3-B8
	-90A00-03	3-B8
	-90A00-06	3-B8
	-90A00-16	3-B8
	71910-90A01-03	3-B8
	-90A01-06	3-B8
	-90A01-16	3-B8
	71930-90A00-	3-B8
	71931-90A00-	3-B8
	71956-30020-13	3-B8
	-30020-16	3-B8
	-30020-56	3-B8
	71990-30020-13	3-B8
	-30020-16	3-B8
	-30020-56	3-B8
	72110-90A00-	3-B8
	-90A04-	3-B8
	72120-90A00-	3-B8
	-90A04-	3-B8
	72130-90A00-	3-C8
	-90A01-	3-B8
	-90A03-	3-C8
	72140-90A00-	3-C8
	72145-90A00-	3-C8
	72146-90A00-	3-C8
	72510-90A00-	3-C8
	-90A01-	3-C8
N	-90A03-	3-C8
	72520-90A00-	3-C8
N	-90A02-	3-C8
	72525-14010-13	3-C8
	-14010-16	3-C8
	-14010-56	3-C8
	-90A00-	3-C8
	72526-14010-13	3-C8
	-14010-16	3-C8
	-14010-56	3-C8
	-90A00-	3-C8
	72538-12010-	2-F11
	72551-90A00-03	3-C8
	-90A00-06	3-C8
	-90A00-16	3-C8

	PART NUMBER	LOCATION
	72552-90A00-03	3-C8
	-90A00-06	3-C8
	-90A00-16	3-C8
	72607-90A00-	3-D8
	72630-90A00-	3-C8
	-90A02-	3-C8
	-90A09-	3-D8
N	-90A17-	3-D8
	72640-90A00-	3-D8
	-90A02-	3-D8
	-90A09-	3-D8
N	-90A17-	3-D8
	72651-90A00-	3-D8
	72660-90A00-03	3-D8
	-90A00-06	3-D8
	-90A00-16	3-D8
	72670-90A00-	3-D8
	-90A02-	3-D8
	72680-90A00-	3-D8
	-90A02-	3-D8
	72694-90A00-03	3-D8
	-90A00-06	3-D8
	-90A00-16	3-D8
	73150-90A00-	3-E8
	73178-12010-26	3-E8
	73210-90A04-	3-E8
	-90A06-03	3-E8
	-90A06-06	3-E8
	-90A13-03	3-E8
	-90A13-06	3-E8
	-90A21-03	3-E8
	-90A21-06	3-E8
	73220-90A02-03	3-E8
	-90A02-06	3-E8
	-90A10-03	3-E8
		3-F8
	-90A10-06	3-F8
	73230-90A01-	3-F8
	-90A04-	3-F8
	-90A10-03	3-F8
	-90A10-06	3-F8
	-90A17-03	3-F8
	-90A17-06	3-F8
	73240-90A00-	3-F8
	-90A05-	3-F8
	-90A09-03	3-F8
	-90A09-06	3-F8
	-90A16-03	3-F8
	-90A16-06	3-F8
	-90A20-03	3-F8
	-90A20-06	3-F8
	73330-90A01-	3-F8
	-90A04-03	3-F8
	-90A04-06	3-F8
	-90A04-16	3-F8
	-90A05-03	3-F8
	-90A05-06	3-F8
	-90A05-16	3-F8
	74102-90A00-01	3-L8
	-90A00-05	3-L8
	74104-90A00-	3-L8
	74105-10010-13	3-L8
	-10010-26	3-L8
	74135-10030-	3-L8

	PART NUMBER	LOCATION
	74137-10030-	3-L8
	74250-20010-16	3-G8
	-90A00-03	3-G8
		3-H8
	-90A00-06	3-G8
		3-H8
	-90A00-16	3-G8
		3-H8
	74310-90A00-08	3-H8
	-90A01-08	3-H8
	-90A01-18	3-H8
	-90A03-18	3-H8
	-90A04-18	3-H8
N	-90A27-08	3-H8
N	-90A39-08	3-H8
N	-90A52-08	3-H8
	74320-90A00-08	3-H8
	-90A11-08	3-H8
	-90A12-08	3-H8
	-90A13-08	3-H8
N	-90A24-08	3-H8
N	-90A31-08	3-H8
N	-90A42-08	3-H8
	74348-12010-08	3-H8
	-12010-18	3-H8
	74404-90A00-	3-J8
	74407-90A00-	3-J8
	74431-90A00-	3-J8
	74433-90A00-	3-J8
	74434-90A00-	3-J8
	74451-90A00-	3-J8
	74534-90K00-	4-F3
	74556-12112-	3-K8
	-12113-	3-K8
	-12116-	3-K8
	74559-14030-	3-K8
	-20030-	3-K8
	-20090-	3-K8
	-22040-	3-K8
	74564-35010-	3-K8
	-35020-	3-K8
	74610-10020-08	3-H8
	-10020-18	3-H8
	74617-14010-08	3-I8
	-14010-18	3-H8
		3-I8
	74620-87001-08	3-H8
	-90A00-	3-H8
	-90A00-08	3-H8
	-90A00-18	3-H8
	74732-90A00-	3-F3
	75101-60011-	3-E9
	75315-90A00-	3-A9
S	75316-69015-	3-A9
	-90A00-	3-A9
	75317-90A00-	3-A9
	75325-90301-	3-A9
	75330-90A00-	3-A9
	75340-90A00-	3-A9
	75351-90A00-	3-A9
	75370-90A00-	3-A9
	-90A02-	3-A9
	75415-95660-	3-F7
	75416-95661-	3-F7

	PART NUMBER	LOCATION
	75430-90A00-	3-A9
	-90A02-	3-A9
	75505-90A00-	3-B9
	75506-90A00-	3-B9
	75531-90A00-	3-B9
	75533-90A00-	3-B9
	75534-90A00-	3-B9
	75535-90A00-	3-B9
	75541-90A00-	3-B9
	75543-90A00-	3-B9
	75553-90A00-	3-B9
	75554-90A00-	3-B9
	75575-90A00-	3-C9
	75583-90A00-	3-C9
	75586-90A00-	3-C9
	75596-90A00-	3-C9
	75631-90A00-	3-L4
	75641-90A00-	3-C9
	75642-90A00-	3-C9
	75645-90A00-	3-C9
	75646-90A00-	3-C9
	75710-90A00-	3-C9
	-90A02-	3-C9
	75720-90A00-	3-C9
	-90A02-	3-C9
	75730-90A00-	3-C9
	-90A01-	3-C9
		3-D9
	75740-90A00-	3-D9
	-90A01-	3-D9
	75751-90A00-	3-C9
	75752-90A00-	3-C9
	75755-90A00-	3-C9
	75756-90A00-	3-C9
	75761-90A00-	3-D9
	75762-90A00-	3-D9
	75763-90A00-	3-D9
	75764-90A00-	3-D9
	75765-90A00-	3-D9
	75766-90A00-	3-D9
	75812-90A00-	3-C9
	75813-90A00-	3-C9
	75850-69015-	3-D9
	75860-69015-	3-D9
	75867-90020-	3-D9
	76603-69015-	3-B2
	76604-69015-	3-B2
	76607-69015-	3-I4
	76608-69015-	3-I4
	76628-90A00-	3-J3
S	-90A01-	3-J3
	77001-60110-	3-L9
	-60200-	3-L9
S	77023-22010-	3-L9
	77030-90A01-	3-L9
	77037-90K00-	3-L9
	77169-14020-	3-M9
	77193-60030-	3-L9
	77201-60130-	3-L9
	-60150-	3-L9
	77203-60040-	3-M9
	-60050-	3-M9
	77205-60270-	3-L9
	77209-60040-	3-M9
	77213-60030-	3-M9
	77240-60010-	3-M9
	-60011-	3-M9
	-60020-	3-M9
S	-60030-	3-M9
	77244-60110-	3-A10
	-60140-	3-A10
	77249-60030-	3-A10
	-60040-	3-L9
	-60050-	3-L9
	77250-60050-	3-M9
	-61030-	3-A10
	77251-60200-	3-M9
	-60201-	3-M9
	-60210-	3-M9
	-60211-	3-M9
	-60212-	3-M9
	77252-60051-	3-M9
	-60060-	3-M9
	-60061-	3-M9
	77253-60020-	3-M9
	-60021-	3-M9
	-60040-	3-M9
	-60041-	3-M9
	77260-60060-	3-L10
	77261-60030-	3-A10
S	-60070-	3-M9
	77262-60030-	3-M9
	77263-60040-	3-A10
	77264-60030-	3-L9
	77265-60020-	3-B10
	77293-60030-	3-A10
	77305-90A00-	3-A10
	-90A01-	3-A10
	77310-12090-	3-L9
	-12100-	3-L9
	-35061-	3-L9
	77316-12050-	3-L9
	77358-12020-	3-A10
	77360-12010-	3-A10
	77601-60060-	3-A10
	77602-60040-	3-A10
	77653-60010-	3-A10
	77740-60060-	3-A10
	77751-60020-	3-B10
	77759-14011-	3-B10
	78014-90A00-	3-E10
	78103-90A00-	3-D10
	78104-90A00-	3-D10
	-90A01-	3-D10
	78105-90A00-	3-D10
	78111-95110-	3-D10
	78118-90K00-	3-D10
	78120-90A02-	3-D10
	-90A03-	3-D10
	-90A06-	3-D10
	-90A07-	3-D10
	78160-90A01-	3-D10
	-90A02-	3-D10
	78170-90A00-	3-D10
	78180-90A04-	3-D10
	-90A08-	3-E10
	-90A13-	3-E10

PART NUMBER	LOCATION
78180-90A14-	3-E10
-90A15-	3-E10
78183-90A00-	3-E10
78186-90A01-	3-E10
78199-90352-	3-E10
78303-90A00-	3-E10
-90A02-	3-E10
78310-90A01-	3-E10
-90A04-	3-E10
78410-90A02-	3-E10
-90A03-	3-E10
78449-90300-	3-E10
78471-90A00-	3-E10
81105-90A02-	4-A1
-95A00-	4-A1
81110-69035-	4-A1
-69235-	4-A1
81111-89117-	4-A1
81113-90A02-	4-B1
-95A00-	4-A1
81119-1A270-	4-A1
81121-62010-	4-A1
81131-10031-	4-A1
81150-69035-	4-A1
-69235-	4-A1
81153-90A02-	4-A1
-95A00-	4-A1
81240-20060-08	4-J1
-22070-08	4-J1
-90K00-	4-J1
-95A03-	4-J1
-95A14-	4-J1
-95A15-	4-J1
-95A16-	4-J1
81241-20060-	4-J1
81260-22030-	4-J1
-90A00-	4-J1
81270-29505-	4-H1
-29645-	4-H1
-29665-	4-H1
81271-13070-	4-H1
81272-13070-	4-H1
81274-95A00-	4-H1
81370-60010-	4-K1
81402-29016-	4-C3
81510-69155-	4-C1
-90A09-	4-C1
81511-90A00-	4-C1
81512-90A00-	4-C1
81517-90A00-	4-C1
81520-69155-	4-C1
-90A09-	4-C1
81521-90A00-	4-C1
81527-90A00-	4-D1
81550-69055-	4-F1
-69195-	4-F1
-90A10-	4-F1
81551-90A00-	4-F1
-90A10-	4-F1
81552-90A00-	4-F1
81557-90A00-	4-F1
	4-G1
81558-90A00-	4-F1
	4-G1

	PART NUMBER	LOCATION
	81560-69055-	4-F1
	-69195-	4-F1
	-90A10-	4-F1
	81561-90A00-	4-F1
	-90A10-	4-F1
	81562-90A00-	4-G1
	81730-19305-	4-E1
	-90A01-	4-E1
	81731-14110-	4-E1
	81732-90A01-	4-E1
		4-I1
	81740-19285-	4-E1
	-90A01-	4-E1
	81741-14110-	4-E1
	81742-90A01-	4-E1
		4-I1
	81750-29145-	4-I1
	-90A01-	4-I1
	81751-14030-	4-I1
	-89107-	4-I1
	81754-91255-	4-I1
	81755-20060-	4-I1
	81760-90A00-	4-I1
	81761-89107-	4-I1
	81850-90A02-	4-K2
	-90A03-	4-K2
N	-90A09-	4-K2
	81930-90A02-	4-K2
	-90A06-	4-K2
	81931-90A02-	4-K2
S	81980-16010-	4-C3
	-22060-	4-C3
	-22070-	4-C3
	-36060-	4-C3
	82028-90A01-	4-D2
	-90A03-	4-D2
	-90A07-	4-D2
	-90A09-	4-D2
	82046-90A00-	4-C2
	-90A01-	4-C2
	82048-90A00-	4-E2
	-90A01-	4-E2
	-90A02-	4-E2
	-90A03-	4-E2
	82079-90A00-	4-C2
	82112-90A02-	4-C2
	82113-90A00-	4-F2
	82114-90K05-	4-F2
	82121-90A02-	4-C2
	82122-90A00-	4-L1
	82124-90A00-	4-C2
	-90A01-	4-C2
	82125-90A05-	4-C2
	-90A06-	4-C2
	-90A07-	4-C2
	-90A08-	4-C2
	82131-90A27-	4-D2
	-90A29-	4-D2
	-90A30-	4-D2
	-90A79-	4-D2
	-90A99-	4-D2
N	-90G30-	4-D2
	82132-90A05-	4-D2
	-90A08-	4-D2

	PART NUMBER	LOCATION
	82134-90A03-	4-D2
	82141-90A01-	4-D2
	-90A06-	4-D2
N	-90A14-	4-D2
	82151-90A01-	4-D2
		4-E2
	-90A05-	4-D2
		4-E2
	82153-90A00-	4-F2
	82155-90A00-	4-F2
	82161-90A01-	4-E2
	-90A17-	4-E2
	-90A19-	4-E2
	-90A20-	4-E2
	82162-90A00-	4-E2
	-90A12-	4-E2
	-90A21-	4-E2
	82163-90A03-	4-E2
	-90A10-	4-E2
	-90A13-	4-E2
	82164-90A01-	4-F2
	-90A02-	4-F2
S	-90A03-	4-F2
	82165-90A00-	4-E2
	82166-90A00-	4-E2
	82171-90A00-	4-E2
	-90A35-	4-E2
	-90A08-	4-E2
	82181-90A00-	4-F2
	82182-90A00-	4-E2
	-90A01-	4-E2
	-90A02-	4-E2
	82184-90A02-	4-F2
	-90A03-	4-C2
	-90A04-	4-C2
	82187-90A00-	4-C2
	82203-90A00-	4-F2
	82210-90A00-	4-D2
	-90A04-	4-D2
	-90A05-	4-C2
	-90A10-	4-D2
	-90A38-	4-D2
	-90A39-	4-D2
	-90A48-	4-D2
	-90A68-	4-D2
	-90A69-	4-D2
	-90A76-	4-D2
	-90A94-	4-D2
	-90A95-	4-D2
	-90A98-	4-D2
	82223-90A01-	4-F2
	82232-90A00-	4-D2
	-90A01-	4-D2
	-90A08-	4-D2
	82241-90A00-	4-F2
	-90A01-	4-F2
	82275-90A00-	4-C2
	82276-90A00-	4-C2
	-90A01-	4-C2
N	82282-90A04-	4-F2
N	-90A05-	4-F2
	82310-90A00-	4-C2
	-90A02-	4-C2
	-90A05-	4-C2

	PART NUMBER	LOCATION
	82310-90A06-	4-C2
	-90A09-	4-C2
	-90A10-	4-C2
	82345-12010-	4-F2
	-12050-	4-F2
	-22010-	4-F2
	82350-90A00-	4-F2
	82372-90A00-	4-D2
		4-E2
	82377-90A00-	4-F2
	82410-90A00-	4-E2
	-90A07-	4-E2
	82412-90A00-	4-F2
	82420-90A01-	4-E2
	-90A02-	4-E2
	-90A04-	4-E2
	-90A08-	4-E2
	-90A15-	4-E2
	-90A18-	4-E2
	-90A25-	4-E2
	-90A26-	4-E2
	82470-90A00-	4-F2
	-90A03-	4-F2
	82520-90A00-	4-E2
	-90A01-	4-E2
	82616-12010-	4-C3
	82650-20010-	4-C3
	-20011-	4-C3
	-32020-	4-C3
	82670-90A00-	4-F2
	-90K02-	4-F2
	82671-30030-	4-F2
	82672-26900-	4-G2
	82683-90A00-	4-C3
	-90A02-	4-C3
	-90A05-	4-C3
	-90A07-	4-C3
	-90A09-	4-C3
	-90A10-	4-C3
	-90A13-	4-C3
N	-90A14-	4-C3
N	-90A15-	4-C3
	82821-12150-	4-L1
	82823-90300-	4-G2
	83101-20040-	4-I2
	-36010-	4-I2
S	-89101-	4-I2
	-95020-	4-I2
	83110-90A10-	4-I2
	-90A11-	4-I2
	-90A22-	4-I2
N	-90A45-	4-I2
	83132-90A00-	4-I2
	-90A04-	4-I2
	83134-90A00-	4-I2
	-90A05-	4-I2
S	-90A06-	4-I2
	83138-90A00-	4-I2
	83145-90A00-	4-I2
	-90A02-	4-I2
	83180-60030-	4-I2
	-60040-	4-I2
	83243-90A00-	4-J2
	-90A02-	4-J2

	PART NUMBER	LOCATION
N	83243-90A04-	4-J2
	83244-90A00-	4-J2
N	-90A02-	4-J2
	83245-90A00-	4-I2
	-90A01-	4-I2
N	-90A04-	4-I2
	83246-90A00-	4-J2
	-90A04-	4-J2
N	-90A06-	4-J2
	83247-90A00-	4-I2
	-90A02-	4-I2
	-90A03-	4-I2
	-90A07-	4-I2
	83270-90A00-	4-I2
	-90A01-	4-I2
	-90A03-	4-J2
	-90A05-	4-I2
	-90A06-	4-J2
N	-90A12-	4-J2
	83320-69015-	4-C3
	83361-20030-	3-M9
		4-C3
	83390-30020-	4-C3
	-60010-	4-C3
	83391-12050-	4-C3
	83420-20020-	4-C3
	83520-14021-	4-C3
	-55011-	4-C3
	-60010-	4-D3
	-60020-	4-D3
	83530-14010-	4-I3
	-14030-	4-I3
	83710-90A01-	4-J2
	-90A04-	4-J2
	83715-90A00-	4-J2
	83909-12230-	4-J2
	83910-90A00-	4-J2
	-90A06-	4-J2
	83919-12230-	4-J2
	84112-69045-	4-D3
	-69085-	4-D3
	-69295-	4-D3
	-69335-	4-D3
	84118-90A00-	4-D3
	84119-90A00-	4-D3
	-90A01-	4-D3
	-90A02-	4-D3
	84140-19055-	4-D3
	-39045-	4-D3
	-69085-	4-D3
	84210-60021-	4-D3
	84222-60020-	4-D3
	-60021-	4-D3
	-60030-	4-D3
	-60040-	4-D3
N	-60060-	4-D3
	84230-22050-	4-D3
	-22051-	4-D3
	84231-14020-	4-D3
	84234-22010-	4-D3
	-24010-	4-D3
	84242-90A00-	4-D3
	84310-60170-	4-E3
	-60180-	4-E3
	-60430-	4-D3

	PART NUMBER	LOCATION
	84310-60470-	4-E3
	84312-20011-	4-E3
	84332-39105-	4-E3
	-69055-	4-E3
	-69095-	4-E3
	84340-22060-	4-E3
	-22071-	4-E3
	-22072-	4-E3
	84380-20010-	4-E3
	84450-60080-	4-E3
	-60100-	4-E3
	84460-22010-	2-A13
	84461-30040-	4-E3
	-60020-	4-E3
	84510-60040-	4-E3
	84540-60020-	4-E3
	84580-36021-	4-I3
	-36040-	4-I3
	84652-69045-	4-E3
	-69085-	4-E3
	-69345-	4-E3
	-69385-	4-E3
	84653-90A00-	4-E3
	84660-22021-	4-E3
	84722-60070-	4-E3
	-60080-	4-E3
	84730-90A00-	4-E3
	-90A01-	4-E3
	84732-90A00-	4-E3
	84760-90A00-	4-F3
	84790-20050-	4-F3
	-90A05-	4-F3
	84956-60020-	4-D3
	-60030-	4-D3
	84999-10100-	2-H3
		4-E3
	-10170-	4-E3
	85010-90A00-	4-L3
	-90A01-	4-L3
	85031-30010-	4-B4
	-30020-	4-F4
	-90A00-	4-E4
	-90A01-	4-B4
	85035-90A00-	4-F4
	-90A01-	4-D4
	-90A02-	4-D4
	85120-90A21-	4-J3
	-90A23-	4-J3
N	-90A28-	4-J3
N	-90A29-	4-J3
	85160-90A05-	4-J3
N	-90A07-	4-J3
	85174-12320-	4-L3
	85176-90A00-	4-L3
	85178-12320-	4-L3
	-90A00-	4-J3
	85190-90A00-	4-L3
	-90A02-	4-J3
	-90A05-	4-J3
	-90A06-	4-L3
	85192-14010-	4-J3
	-90300-	4-L3
	85195-95700-	4-L3
	85210-90A01-	4-J3

PART NUMBER	LOCATION
85210-90A04-	4-J3
85220-16140-	4-J3
-16150-	4-K3
-16270-	4-K3
-16290-	4-K3
-16340-	4-K3
-90A01-	4-J3
-90A02-	4-L3
-90A06-	4-J3
85221-12120-	4-K3
-30100-	4-K3
-90A00-	4-K3
-90A02-	4-M3
-90A04-	4-K3
85247-90A01-	4-J3
85271-90A00-	4-G4
85276-14010-	4-F4
85310-10090-	4-F4
-10140-	4-B4
-12130-	4-B4
-20100-	4-D4
-20130-	4-B4
-22070-	4-F4
-22080-	4-D4
-90B00-	4-D4
-90K01-	4-B4
85330-90A02-	4-B4
-90A04-	4-F4
-90A05-	4-D4
-90A06-	4-B4
-90A07-	4-B4
-90A08-	4-D4
85332-20050-	4-D4
-90A0C-	4-F4
-90A01-	4-B4
85333-20020-	4-B4
-60010-	4-B4
85336-10010-	4-F4
85338-22020-	1-E5
85341-90A02-	4-B4
-90A04-	4-B4
-90A05-	4-B4
-90A08-	4-B4
85348-89101-	4-B4
85352-12010-	4-F4
	4-G4
85355-10060-	4-D4
-14010-	4-B4
-20070-	4-D4
-20200-	4-D4
-87201-	4-D4
-89122-	4-D4
85361-10070-	4-F4
-30070-	1-E5
85375-22061-	4-G4
85430-60010-	4-F3
85440-60080-	4-F3
-60090-	4-F3
85500-22090-	4-F3
-90A04-	4-F3
-90A07-	4-F3
-90A08-	4-F3
85520-14030-	4-F3
-30151-	4-F3

PART NUMBER	LOCATION
85533-20010-	4-F3
-20011-	4-F3
85550-90A00-	4-F3
85613-31010-	1-A10
85913-30020-	4-F3
-90A01-	4-F3
	4-H5
-90K00-	4-F3
85926-30010-	4-G3
-90K00-	4-G3
85927-60040-	4-G3
85940-26010-	4-F3
	4-G3
-90A01-	4-G3
-90A04-	4-G3
-90A07-	4-G3
85980-90A00-	4-F3
85991-22020-	4-G3
-60020-	4-G3
-90A00-	4-G3
85999-12050-	4-G3
-89101-	4-G3
86120-89118-	4-I4
-90A00-	4-I4
-90A04-	4-I4
-90A05-	4-I4
86124-20040-	4-I4
-20050-	4-I4
86125-20040-	4-I4
86160-22060-	4-K4
-22070-	4-K4
-90A00-	4-K4
-90A01-	4-K4
-90A02-	4-K4
86206-90A03-	4-I4
86211-90A00-	4-I4
86212-90A00-	4-J4
86260-90A00-	4-J4
86265-90A00-	4-J4
-90A01-	4-J4
86300-90A07-	4-L4
-90A09-	4-L4
-90A12-	4-L4
-90A14-	4-L4
-90A17-	4-L4
86301-90A09-	4-L4
86353-14330-	4-L4
86510-22120-	4-M4
-90A01-	4-M4
-90K05-	4-M4
86520-22120-	4-M4
-90A01-	4-M4
-90K05-	4-M4
86995-90A02-	4-K2
87100-90A01-	4-C5
-90A07-	4-C5
87104-87003-	4-E5
-90A00-	4-E5
-90A06-	4-E5
-90K04-	4-E5
87105-14020-	4-E5
-87002-	4-E5
87107-90A00-	4-E5
-90A01-	4-E5

PART NUMBER	LOCATION
87107-90A03-	4-E5
87110-90A00-	4-E5
-90A03-	4-E5
87130-90A01-	4-E5
-90A08-	4-E5
87138-22030-	4-E5
-90A00-	4-E5
-90K03-	4-E5
87150-90A01-	4-F5
-90A03-	4-F5
-90A09-	4-F5
-90A11-	4-F5
87200-90A00-	4-C5
-90A01-	4-C5
-90A05-	4-C5
-90A07-	4-C5
-90A03-	4-C5
87201-90A01-	4-J5
-90A02-	4-J5
-90A04-	4-J5
87208-90A11-	4-M5
87211-90A0 -	4-J5
87212-90A00-	4-F5
87240-90A00-	4-M5
-90A01-	4-M5
-90A02-	4-M5
87245-90A00-	4-M5
-90A01-	4-M5
-90A02-	4-M5
-90A04-	4-A6
-90A05-	4-A6
	4-B6
-90A06-	4-B6
-90A13-	4-B6
-90A14-	4-B6
-90A15-	4-A6
-90A16-	4-A6
-90A18-	4-M5
-90A19-	4-A6
-90A20-	4-A6
-90A21-	4-B6
-90A22-	4-B6
-90A23-	4-A6
-90A24-	4-A6
-90A26-	4-M5
-90A31-	4-A6
-90A32-	4-B6
-90A33-	4-B6
-90A34-	4-B6
-90A35-	4-B6
-90A40-	4-B6
-90A41-	4-B6
-90A43-	4-B6
-90A49-	4-A6
87247-20051-	4-M5
87248-60260-	4-A6
-90A01-	4-F5
-90A03-	4-F5
-90A05-	4-F5
-90A06-	4-A6
-90A07-	4-A6
-90A08-	4-A6
-90A09-	4-A6
-90A10-	4-A6

PART NUMBER	LOCATION
87248-90A12-	4-A6
-90A14-	4-A6
-90A15-	4-A6
-90A16-	4-A6
-90A17-	4-A6
-90A18-	4-A6
-90A19-	4-A6
-90A20-	4-A6
-90A21-	4-A6
-90A22-	4-A6
-90A23-	4-A6
-90A24-	4-A6
-90A25-	4-A6
-90A26-	4-A6
-90A27-	4-A6
-90K18-	4-A6
-90K19-	4-A6
87251-29020-	4-A6
-30200-	4-A6
	4-M5
-90A00-	4-M5
-90A01-	4-M5
-90A02-	4-M5
-90A05-	4-M5
-90K00-	4-A6
-95400-	4-M5
87286-90A01-	4-J5
87810-90A03-	4-A5
87828-90A00-	4-A5
-90A01-	4-A5
87834-14011-18	4-A5
87910-69015-	4-A5
-90A00-	4-A5
-90A08-	4-A5
-90A10-	4-A5
87911-90A04-	4-A5
N -90A05-	4-A5
87940-69015-	4-A5
-90A00-	4-A5
-90A07-	4-A5
-90A09-	4-A5
88031-60010-	1-B9
	4-D6
-60030-	4-D6
-60040-	4-D6
-60050-	4-D6
88300-90A11-	4-C5
-90A82-	4-C5
88301-14020	4-L6
-20050-	4-L6
88304-14010-	4-K6
-14021-	4-K6
88305-20070-	4-L6
88306-20040-	4-L6
88307-20050-	4-L6
-20060-	4-L6
88312-30250-	4-L6
88313-14010-	4-L6
-20070-	4-L6
88316-14011-	4-K6
-20070-	4-K6
88317-20030-	4-L6
88320-60080-	4-L6
-60170-	4-L6
-60190-	4-L6
-60230-	4-L6

PART NUMBER	LOCATION
88321-14011-	4-L6
-20061-	4-L6
88322-14011-	4-L6
-20040-	4-L6
88335-12050-	4-L6
88341-14010-	4-L6
88342-14010-	4-L6
88343-14011-	4-L6
-20040-	4-L6
88344-14011-	4-L6
88360-14020-	4-M6
-30270-	4-M6
-30280-	4-M6
S -40010-	4-M6
88366-14010-	4-K6
	4-M6
-20050-	4-K6
-20050-	4-M6
88371-22120-	4-L6
-60050-	4-L6
-60110-	4-L6
88372-22100-	4-M6
-26060-	4-M6
-30320-	4-M6
-60040-	4-M6
88374-12020-	4-M6
88375-30270-	4-M6
88403-14030-	4-M6
-26030-	4-M6
88410-14090-	4-L6
-22060-	4-L6
-22080-	4-L6
-60070-	4-L6
88411-14050-	4-K6
-22040-	4-K6
-25020-	4-K6
88412-12040-	4-K6
-14010-	4-K6
-22030-	4-K6
88431-36190-	4-M6
-60060-	4-M6
88437-60100-	4-M6
-60141-	4-M6
-60170-	4-M6
-60230-	4-M6
88440-12160-	4-M6
-20060-	4-M6
-35010-	4-M6
88444-36110-	4-M6
-60020-	4-M6
-60041-	4-M6
88451-25020-	1-F3
88452-60011-	1-F3
88460-90A00-	4-G6
-90A04-	4-G6
-90A06-	4-G6
-90A08-	4-G6
-90A09-	4-G6
88467-22040-	4-G6
88470-14010-	4-G6
88472-90A01-	4-G6
88501-90A0 -	4-H5
-90A03-	4-H5
N -90A07-	4-H5

PART NUMBER	LOCATION
88510-90A01-	4-H5
-90A04-	4-H5
-90A13-	4-H5
88515-20040-	4-H5
-87004-	4-H5
88539-90A00-	4-H5
88578-90A01-	4-H6
-90A02-	4-H6
88596-12010-	4-M6
88605-90A01-	4-H5
-90A09-	4-H5
88610-90A01-	4-E3
88625-90A00-	4-H5
88626-90A01-	4-H5
88645-10020-	4-H5
-22020-	4-H5
S -30250-	4-H5
88648-90A00-	4-H5
88650-60020-	4-H5
-90A02-	4-H5
-90A03-	4-H5
-90A04-	4-H5
88688-90A00-	4-G6
-90A05-	4-G6
88690-90A00-	4-D6
-90A02-	4-D6
-90A05-	4-D6
-90A09-	4-D6
-90A10-	4-D6
88711-90A00-	4-G6
-90A05-	4-G6
-90A07-	4-G6
-90A08-	4-H6
88712-90A01-	4-H6
-90A11-	4-H6
-90A13-	4-H6
-90A26-	4-H6
88716-90A01-	4-H6
-90A05-	4-H5
-90A07-	4-H6
-90A09-	4-H6
-90A27-	4-H5
88721-90A02-	4-H6
-90A03-	4-H6
-90A07-	4-H6
-90A08-	4-H6
89422-30020-	4-G3
89423-60020-	[illegible]
89425-60030-	[illegible]
-69035-	[illegible]
89428-36010-	4-[illegible]
89530-60030-	4-G3
89550-60130-	4-G3
89570-60050-	1-A7
-60060-	1-A7
-60070-	1-A7
89620-60042-	4-G3
-60080-	4-G3
90041-70001-	1-J3
90043-45010-	1-A2
-45027-	1-A2
90044-01010-	1-B4
	1-F3
-30026-	1-B4

PART NUMBER	LOCATION
90044-60053-	1-C5
90090-10018-	1-J10
90093-30610-	1-E10
90096-90001-	1-J10
-90021-	1-J10
-90022-	4-M6
90099-01334-	1-E10
-01458-	4-L3
-01503-	1-E10
-01518-	1-E10
-01521-	1-C10
-02205-	1-E8
-02207-	1-L7
-02209-	1-L7
-02315-	1-C10
-02316-	1-C10
-02323-	1-E8
-04579-	4-G6
-04905-	4-L6
-04924-	4-L5
-04926-	4-L6
-04945-	1-A10
-04958-	4-L6
-05141-	4-L3
-07047-	1-F8
-07048-	1-L7
-07094-	4-M6
-07103-	1-L7
-07104-	1-G7
-07108-	1-L7
-07109-	1-G7
-07114-	4-M6
-08058-	4-L6
-08082-	1-H8
-10039-	1-E8
-10040-	1-E8
-10087-	1-I9
-10107-	1-E8
-10111-	1-L7
-10113-	1-E8
-10116-	1-L7
-10117-	4-M6
-10119-	1-E8
-10120-	1-L7
-10125-	1-L7
-10126-	1-L7
-10130-	2-E8
-10133-	4-M6
-10137-	1-L7
-12010-	1-A10
-13001-	1-M9
-13002-	1-E10
	1-J9
-13011-	4-K6
-13012-	4-K6
-13013-	1-D10
-13020-	1-J9
-14005-	1-C10
-14015-	1-G10
-14020-	1-G7
-14023-	2-E8
-14028-	2-E8
-14039-	1-C10
-14068-	1-D10

PART NUMBER	LOCATION
90099-14069-	1-D10
-15017-	1-H8
-15022-	1-D10
-17112-	1-E8
S -18010-	1-A11
-19251-	1-L7
-30610-	1-E10
-32089-	4-B4
-32103-	4-B4
-33299-	4-B4
	4-C4
-33332-	4-B4
	4-C4
-37005-	1-H7
-52065-	1-L7
-52066-	1-L7
-52082-	1-L7
90101-08041-	1-H6
-08052-	2-E1
-10439-	2-J13
-12021-	2-K13
-12029-	2-D8
-12060-	2-I13
-13001-	1-M1
S 90105-06052-	2-A10
S	2-B9
-06069-	2-M4
S -08114-	2-A10
S	2-B9
-10021-	2-M8
-10029-	3-H1
-10036-	1-F3
-10039-	3-H1
	3-I1
-10096-	2-C4
	2-I4
-11010-	2-I7
-11013-	2-I7
-11014-	2-I7
-12018-	3-L9
-12039-	1-E3
	2-K3
-12056-	2-C10
	2-K8
-13002-	1-E3
-13004-	1-E3
-14033-	1-M1
-14039-	1-M1
-16003-	1-F3
90106-12022-	2-E14
90109-06008-	2-A13
S -10091-	2-D10
S	2-M8
-16001-	1-M1
90112-12041-	3-K1
	3-L1
90113-08001-	2-B3
	2-C3
-10003-	2-E9
90114-11124-	2-G6
90116-06018-	1-F6
-06306-	1-M1
-08022-	2-H1
-08042-	1-J5

PART NUMBER	LOCATION
90116-08112-	1-K4
-08123-	1-K3
-08131-	1-J5
-08188-	1-J5
-08325-	2-F9
	2-H10
-10048-	1-E2
	1-J5
-10055-	1-J5
-10056-	1-J5
-10074-	2-C10
	2-J8
-10075-	2-C10
	2-K8
-10076-	2-K8
-10096-	1-J5
-10098-	1-J5
-10103-	2-C10
	2-J8
-10104-	2-C10
	2-J8
-10107-	2-J8
S -10122-	2-C10
S -10124-	2-K8
-10299-	1-J5
-12007-	2-E14
-12011-	1-J5
-12321-	1-J5
90117-06131-	1-C11
-08020-	1-B6
N -14016-	2-K14
N -14017-	2-K14
N -14179-	2-A15
-14180-	2-A15
90118-14109-	2-A15
-14110-	2-A15
-14160-	2-A15
-14187-	2-K14
-14188-	2-K14
-14189-	2-K14
-14190-	2-A15
-14210-	2-A15
-14224-	2-K14
90119-08497-	2-K3
-08523-	2-K3
-10208-	1-F3
90149-60001-	1-J3
90170-08005-	1-J3
-09167-	4-D3
-10014-	1-J3
-10074-	1-J3
-10198-	1-E3
-11003-	3-E10
-12010-	1-E3
-22058-	2-A11
	2-E11
90171-12028-	2-H12
-14042-	2-G12
90175-06003-	1-F6
-08008-	1-F6
90176-08014-	1-I1
90179-06158-	4-L3
-08026-	4-J3
-10010-	1-B6
-10070-	1-B6

PART NUMBER	LOCATION
90179-12015-	1-E3
-12044-	1-E3
-12086-	2-F12
-14004-	3-E10
-20001-	2-D10
	2-L8
-22004-	1-F3
-22005-	2-G6
-22009-	1-F3
-22011-	2-D10
	2-L8
-22062-	1-F3
-26002-	2-K2
	2-K4
	2-M2
N -26004-	2-K2
N -26004-	2-K4
90189-04024-	1-D7
90201-06177-	1-K3
-06566-	2-E5
-10045-	2-B3
-10092-	2-B3
-10227-	1-I3
-12006-	1-I3
-12042-	2-L5
-12169-	2-D6
-16012-	2-L5
-16013-	2-A4
-20005-	2-D10
	2-L8
-22005-	2-G6
-22007-	2-D10
-22007-	2-L8
-26003-	2-K2
	2-K4
-30003-	2-M10
-35002-	2-J6
-40551-	2-E10
	2-K8
-40552-	2-E10
	2-K8
-40553-	2-E10
	2-K8
-40554-	2-E10
	2-K8
-40555-	2-E10
	2-K8
-40556-	2-E10
-40556-	2-K8
-40557-	2-E10
	2-K8
-40558-	2-E10
	2-K8
-40559-	2-E10
	2-K8
-40560-	2-E10
	2-K8
	2-L8
-40561-	2-E10
	2-K8
	2-L8
S -79001-	2-C10
S	2-M8
S -79002-	2-C10

PART NUMBER	LOCATION
90201-79002-	2-M8
-79003-	2-C10
	2-M8
-79004-	2-C10
	2-M8
-79005-	2-C10
	2-M8
-79006-	2-C10
	2-M8
-79007-	2-C10
	2-M8
-79008-	2-C10
	2-M8
-79009-	2-C10
	2-M8
-79010-	2-C10
-79010-	2-M8
-79011-	2-C10
	2-M8
-79012-	2-C10
	2-M8
-79013-	2-C10
	2-M8
-79014-	2-C10
	2-M8
-79015-	2-C10
	2-M8
-79016-	2-D10
	2-M8
-79017-	2-D10
	2-M8
-79018-	2-D10
-79018-	2-M8
-79019-	2-D10
	2-M8
-79020-	2-D10
	2-M8
-79021-	2-D10
	2-M8
-79022-	2-D10
	2-M8
-79023-	2-D10
	2-M8
90206-12001-	2-L5
90209-52001-	2-I4
-52002-	2-I4
-52003-	2-I4
-52004-	2-I4
90210-10001-	2-B11
-12001-	1-J1
-13001-	1-J1
90213-06001-	2-B3
-06013-	2-L13
-07010-	2-L13
90214-42030-	2-I10
90215-09003-	2-B3
	2-C3
-42025-	2-I10
90240-05071-	3-E10
-06158-	2-I13
-08042-	2-J12
-08128-	2-B7
	2-D6
S -09001-	2-K9

PART NUMBER	LOCATION
90240-10027-	2-B7
S -10148-	2-J9
-10157-	2-B7
90241-10017-	1-E3
90249-08018-	2-E1
-08068-	2-L13
-10017-	2-E1
	2-L12
90250-03036-	2-G5
-03050-	2-G5
-03051-	2-D5
	2-E5
	2-G5
	2-H5
-04054-	2-E5
-05008-	2-J11
-05034-	2-D3
-05202-	2-L2
-06009-	2-L2
-06037-	1-A2
-07057-	2-E9
	2-H10
-08024-	2-D7
-08054-	1-A2
-08074-	1-A2
-08120-	1-A2
	1-E2
-10006-	2-G6
-10192-	1-A2
	1-E3
-10214-	2-B3
	2-G2
-10215-	2-B3
-12146-	2-G2
-12216-	2-G2
90253-15005-	1-A2
-16014-	1-M1
-17003-	1-A2
-17007-	1-M1
-18002-	1-M1
-18003-	1-M1
90254-04012-	2-L5
-05001-	2-D6
-05004-	2-A7
-05016-	2-A7
	2-B3
	2-D3
90256-04001-	2-H3
90280-03009-	1-M3
-03015-	2-M2
-05001-	2-D6
-05008-	2-I11
-05010-	1-F3
	1-H3
90281-07004-	1-F3
90282-03005-	2-H5
-03006-	2-G5
	2-H5
	2-I5
-03007-	2-G5
	2-I5
90301-06005-	2-M3
-06196-	2-A4
-09008-	2-C4

PART NUMBER	LOCATION
90301-09008-	2-I4
-09173-	2-A4
-11006-	2-M5
-11053-	2-C8
-14001-	2-A13
-14030-	2-C6
-18018-	2-B4
	2-H2
-20001-	1-G4
-21176-	1-G4
-22001-	2-K11
-22003-	2-F5
-24002-	2-F5
-26003-	2-D5
-27003-	2-K6
-28003-	2-F5
-29003-	2-D5
	2-F5
-32002-	2-M10
-33002-	2-A11
	2-M10
-33006-	2-F5
-34004-	2-K6
-34005-	2-J6
-37004-	2-F5
-44001-	2-M10
-51001-	2-B11
-53002-	2-K11
-59003-	2-C4
-59044-	2-A8
-60001-	2-H11
-60122-	2-D11
-62004-	2-F4
-63001-	2-B11
-64002-	2-A11
-64004-	1-G9
-65145-	2-A11
	2-M10
-69170-	2-H11
-77001-	1-G9
-94002-	2-J4
-99013-	1-G9
-99027-	2-C4
	2-F4
-99028-	2-F4
-99029-	2-K3
-99030-	2-D4
	2-H4
-99030-	2-J4
-99031-	2-D4
	2-H4
90303-13018-	2-D6
90310-09001-	2-B4
	2-H2
-21034-	2-H11
-35001-	2-E9
90311-12002-	2-L5
-13066-	2-D7
-16002-	2-C3
-19001-	2-C11
	2-D11
-19002-	2-B11
-22005-	2-A7
-24001-	2-H11

PART NUMBER	LOCATION
90311-28004-	2-G2
S -32013-	2-G2
-33085-	2-B10
-35004-	2-C6
-36104-	2-E11
-38134-	2-F10
	2-K8
-42010-	2-K5
-45008-	1-E2
-45069-	1-E2
-47001-	2-E9
-48002-	2-G6
	2-H6
-48003-	2-H6
-48007-	2-G6
-48008-	2-G6
-48009-	2-H6
-48010-	2-H6
N -48012-	2-G6
-50002-	1-E2
-50006-	1-E2
-50007-	1-E2
-62001-	2-F9
	2-H10
-95001-	1-F2
-95002-	1-F2
-95003-	1-F2
-99001-	1-E3
-99065-	1-E3
90312-17001-	2-G2
-32002-	2-A11
90313-13001-	2-A7
-93001-	2-E9
-93011-	2-F14
90316-48002-	2-G6
90330-24013-	1-A2
-27010-	2-C6
90331-12002-	2-B3
-16050-	2-A8
	2-B3
	2-G6
-18001-	2-B3
-20001-	2-A8
-21001-	1-I1
-35002-	1-A2
-35003-	1-A2
-40024-	1-I1
-48010-	1-H3
-51032-	1-A2
	1-H3
-55001-	1-H3
-56001-	1-H3
90334-07004-	1-I1
-07009-	1-I1
90339-04009-	2-G5
-04010-	2-H5
-04011-	2-H5
-04012-	2-I5
-04014-	2-H3
-04015-	2-G5
-04016-	2-I5
-04017-	2-G5
	2-H5
	2-I5

PART NUMBER	LOCATION
S 90339-04019-	2-H5
S -04021-	2-I5
-05008-	2-G5
-05009-	2-J5
-06004-	2-G5
-06008-	2-I5
-06009-	2-G5
90340-25001-	2-H12
90341-08001-	2-M3
-10004-	2-D3
-12008-	2-D3
-12069-	2-C6
-15001-	2-A7
-16010-	2-A4
-18002-	2-A8
	2-F2
-18002-	2-G6
-18006-	2-A8
	2-B10
	2-B9
	2-C6
	2-F2
	2-G6
-18049-	2-B10
	2-B9
-18057-	2-A8
	2-B10
	2-B9
	2-F2
	2-G6
	2-M3
-18089-	1-B2
-20002-	1-C5
-20005-	2-C6
-25054-	1-B2
S -26001-	2-B10
S	2-B9
90344-53002-	1-I5
-53011-	1-I5
-54003-	1-A2
90345-51003-	1-A2
-52001-	1-A2
-53001-	1-A2
-53020-	2-E14
-54004-	1-I1
-54005-	1-I1
90360-06004-	2-B8
	2-C3
-06004-	2-F5
	2-J6
	2-L2
-06021-	2-B11
-08009-	2-D3
-10003-	2-A10
	2-A7
	2-B9
	2-C6
	2-D3
90361-05001-	2-D3
-06049-	2-K2
-10037-	2-D3
90363-12002-	2-C1
-15004-	2-C1
-17004-	2-I11

PART NUMBER	LOCATION
90363-18001-	2-C11
-20015-	2-C11
-28001-	2-C11
-30007-	2-C11
-35013-	2-J6
	2-K6
-35017-	2-K2
-35022-	2-K2
	2-K4
-40018-	2-K2
-40035-	2-K2
-45001-	2-B1
-45002-	2-B1
-45008-	2-K4
-52001-	2-B1
-52086-	2-B1
90364-17010-	2-K6
-32003-	2-M10
-32007-	2-M2
-34006-	2-J6
-38012-	2-J6
-40001-	2-J6
-44065-	2-L2
90365-32002-	2-M2
-32010-	2-M2
-40001-	2-M2
-40002-	2-K2
-47013-	2-E9
90366-17001-	2-F14
-30011-	2-F10
	2-K8
-35011-	2-K6
-35053-	2-K6
-35054-	2-K6
-40004-	2-E10
	2-K8
S -60002-	2-C10
S	2-M8
90368-46066-	2-C10
	2-L8
-45087-	2-F9
	2-H10
-49084-	2-F9
	2-H10
90369-22001-	2-B11
-22004-	2-B11
-35016-	1-K4
-38002-	1-K4
90374-25004-	2-D4
-28007-	2-D4
-30003-	2-M10
-34001-	2-D4
	2-F4
	2-G4
	2-L4
90385-10016-	2-D8
-12029-	2-J12
-16004-	2-D15
-16007-	2-D15
-16008-	2-G3
-19057-	2-D15
	2-K14
90386-03001-	1-F6
-08002-	2-E1

PART NUMBER	LOCATION
S 90386-09009-	2-B10
S	2-B9
-10121-	2-D8
S -13014-	2-J9
S	2-K9
-13192-	2-E1
	2-K12
90387-06065-	2-G3
-08002-	2-F11
-09006-	2-L14
S -09011-	2-J9
-10004-	2-E1
	2-K12
-10028-	1-I2
-10055-	1-I5
90389-02001-	4-J2
-08005-	2-H3
-18002-	2-A15
	2-B15
	2-I14
90401-10006-	1-A4
-14060-	1-A11
-14093-	1-A4
-16008-	2-B12
-18002-	1-A4
-18007-	1-A4
-18083-	1-G4
-18084-	1-G4
90402-13041-	1-I8
-16042-	1-A4
-26072-	1-B11
-26074-	1-B11
-33079-	1-B11
90404-09008-	2-K1
-10018-	2-C9
-10019-	2-B10
-14329-	1-J6
-16008-	1-A4
-16022-	2-M5
-16160-	1-H1
-51031-	2-G13
-51037-	2-G13
-51038-	2-G13
-53035-	1-I5
90405-09026-	2-G13
-09102-	2-G13
-09115-	2-G13
-09116-	2-G13
90407-10003-	2-A13
-10004-	2-A13
-14005-	2-M5
-16006-	2-M5
90410-06006-	2-M10
-06030-	2-K11
	2-M10
-11005-	1-A4
-18002-	1-B11
-25041-	1-B11
90412-10087-	2-C14
	2-D14
-10124-	2-D14
-10125-	2-C14
90413-04005-	2-F7
-09024-	2-G13

PART NUMBER	LOCATION
90 13-10031-	2-C14
-10042-	2-C14
-10106-	2-D14
90414-04002-	2-F7
-10008-	2-C14
90430-06104-	2-A13
-09253-	2-A13
-10022-	2-D7
-10035-	1-A4
-10074-	2-E1
-12030-	2-C6
-12245-	3-L9
-15261-	1-A4
-16242-	2-B12
-18007-	2-A8
	2-F2
-18007-	2-G2
	2-G6
-18008-	2-A8
	2-C6
	2-F2
	2-G2
	2-G6
-18012-	1-A4
	1-G4
-18013-	1-B2
-18244-	1-B2
-25013-	1-B2
S -26002-	2-B10
S	2-B9
-37140-	1-J1
-43002-	1-D5
90440-15141-	1-H1
-16007-	3-H1
-17021-	3-H1
	3-I1
90445-08215-	2-F7
-09006-	4-B4
-11014-	1-C11
-12002-	1-E5
-12046-	1-E5
-12101-	1-E5
-12905-	1-A7
-14055-	4-G4
-14067-	1-E11
-14068-	1-E11
-14072-	4-G4
-17002-	2-G13
-17034-	2-K1
-17043-	1-L2
-17044-	2-H13
-17855-	2-G13
-17895-	2-G13
-17908-	2-G13
-18085-	2-B12
-18089-	2-B12
-18090-	2-B12
-22015-	3-L9
-22904-	3-L9
90446-06013-	4-E4
-06292-	4-E4
-10002-	4-J2
-10008-	4-J2

	PART NUMBER	LOCATION
	90447-12001-	1-E11
	-12016-	1-E11
	90460-01001-	2-B12
	-24039-	1-H4
	-26001-	2-B12
	-50616-	1-E5
		1-F5
	90461-08515-	1-E9
	-08516-	1-A4
	-10387-	2-B10
	-10448-	1-C11
	-10558-	2-C9
	90462-12025-	1-E11
	-12038-	2-M5
	90464-00253-	1-E7
	90467-08008-	3-A2
	-08011-	3-A2
		3-F2
		3-M2
	-09014-	3-A
	-11085-	1-F
N	-12035-	
	-12035-03	
	-12035-06	
	-15006-	
		1-[illegible]
	-16001-	2-A13
	-16002-	2-G13
	-16141-	2-G13
	-18028-	1-L2
		1-M2
	-23002-	1-L2
	-24038-	1-L2
	-28001-	1-J6
	-28003-	1-I6
	-31001-	1-I6
	-32002-	2-G12
	-42001-	1-E5
	90468-12003-	2-I13
	-18071-	3-M7
S	90480-01336-	2-J9
S	-13012-	2-J9
	-15002-	3-C2
S	-17019-	2-J9
	-17158-	2-J12
	-17177-	2-H3
	-17401-	2-C7
	-18001-	1-L2
	-18180-	1-L2
S	-20016-	2-J9
	-24517-	2-G13
	90501-05141-	1-G10
S	-06043-	2-H5
	-06445-	2-K11
	-07005-	2-H3
	-07009-	2-H3
	-07038-	2-M4
	-07040-	2-H5
	-07042-	2-I5
	-07049-	2-I5
	-08022-	1-K5
	-08061-	2-G5
	-08062-	2-H5

	PART NUMBER	LOCATION
	90501-08075-	2-I5
	-09057-	2-G5
	-09066-	2-I5
	-10067-	2-D3
	-10087-	2-C4
	-10092-	2-F4
	-10093-	2-E5
	-10095-	2-J5
	-10098-	2-F5
	-10107-	2-G5
	-10108-	2-G4
	-10745-	2-I12
	-11024-	2-D5
	-11025-	2-H5
	-11030-	2-E5
	-12033-	2-C6
	-12081-	2-M4
	-12083-	2-I5
	-12094-	2-D5
	-12447-	2-J11
	-13011-	2-D3
	-14029-	2-A7
	-14035-	2-C3
	-14069-	2-C3
	-14076-	2-C3
	-14087-	1-J3
	-15006-	2-H5
	-16056-	2-D3
	-16163-	1-J3
	-16750-	2-B3
	-17008-	2-H5
	-18677-	2-L3
	-19002-	2-E5
	-20012-	2-X13
S	-20083-	2-B10
S		2-B9
	-23014-	2-K11
	-23018-	1-I3
	-26017-	1-I3
	-27008-	2-F5
	-29003-	2-A7
	-32013-	2-D5
	-35009-	2-F5
	-40008-	2-F5
	-42006-	1-I3
	-45011-	2-C11
	-45114-	2-H12
	-45342-	1-I3
	-47003-	1-I3
	-85001-	2-M8
	90502-16004-	1-J3
	-29001-	2-G3
		2-H3
	90504-29001-	3-C2
	90506-12031-	2-K13
	-12034-	3-D10
	-12262-	3-D10
	-12451-	2-K12
	-14037-	2-E1
	-16297-	2-B1
	-16475-	2-B1
	-18031-	2-K13
	-20033-	2-L13
	-23009-	2-C11

	PART NUMBER	LOCATION
	90506-26011-	2-K13
	-26014-	2-K13
	90507-14001-	2-F11
	90508-30004-	2-L5
	90510-08001-	1-K5
	-08002-	1-K5
	90520-01002-	3-E6
		3-L6
	-07001-	2-C3
	-08098-	2-B3
	-14002-	2-C3
	-15001-	2-I11
	-17042-	2-C11
	-22013-	2-L4
	-23223-	2-D6
	-27091-	2-G10
	-28036-	2-G10
	-29002-	2-I7
	-29024-	2-I7
	-29025-	2-I7
	-29026-	2-I7
	-29027-	2-I7
	-29051-	1-I3
	-29099-	2-M2
	-29286-	3-I7
	-29287-	2-I7
	-29288-	2-I7
	-30214-	2-M2
	-30216-	2-M2
	-30218-	2-M2
	-31001-	2-H10
	-33009-	2-H4
	-33107-	2-K6
	-33110-	2-K6
	-36015-	2-K2
	-36016-	2-K2
	-36250-	2-K2
	-36251-	2-K2
	-36252-	2-K2
	-36253-	2-K2
	-36254-	2-K2
	-36255-	2-K2
	-50001-	2-D4
		2-F4
		2-G4
	-87001-	2-J4
	90521-01002-	2-C11
	-22011-	2-C11
	-22012-	2-C11
	-22013-	2-C11
	-31001-	1-D3
	-34002-	1-D3
	-36003-	1-D3
	-44002-	2-A11
		2-H11
	-70001-	2-C11
	-75023-	2-K6
	-90002-	2-D4
	-99017-	2-D4
		2-G4
	-99019-	2-D4
	-99021-	2-D4
		2-H4
		2-J4

	PART NUMBER	LOCATION
	90521-99021-	2-L4
	-99040-	2-L4
	-99041-	2-L4
	-99042-	2-K4
	-99043-	2-C4
	90522-40043-	2-I13
	-48044-	2-I13
	90523-05002-	2-M4
	-06004-	2-E5
	-06005-	2-H5
		2-I5
	-15025-	2-C3
	90524-15008-	1-J3
	90540-17002-	3-H1
	90541-03015-	3-I2
	-06008-	2-E1
	-06008-	2-K12
	-08003-	3-A10
	90560-10406-	2-B7
	-12233-	3-H1
		3-I1
	-12263-	1-D5
	-20008-	2-L5
	-25004-	2-D6
	-30184-	2-E10
		2-K8
		2-L8
	-30185-	2-E10
		2-K8
		2-L8
	-30186-	2-E10
		2-K8
	-30186-	2-L8
	-30187-	2-E10
		2-K8
		2-L8
	-30188-	2-E10
		2-K8
		2-L8
	-30190-	2-E10
		2-K8
		2-L8
	-30191-	2-E10
		2-K8
		2-L8
	-30192-	2-E10
		2-F10
		2-K8
	-30192-	2-L8
	-30199-	2-E10
		2-F10
		2-K8
		2-L8
	-33001-	2-C6
	-34001-	2-L6
	-35005-	2-K6
	-35007-	2-K2
	-35008-	2-K6
	-35009-	2-K4
	-36001-	2-K2
	-38003-	2-L6
	-39001-	2-K2
	-72001-	2-K4
	-72002-	2-K4

	PART NUMBER	LOCATION
	90560-72003-	2-K4
	90561-06006-	2-M4
	-09005-	1-F5
	90562-18151-	2-A13
		2-H1
	-30002-	2-M10
	-31002-	2-A11
	-32002-	2-A11
	-47001-	2-M10
	-47002-	2-M10
	-48001-	2-M10
	-67001-	2-B11
	90564-06002-	2-J5
	-30035-	2-F10
		2-L8
	-68001-	2-E10
	-68001-	2-L8
	-68002-	2-E10
		2-L8
	-68003-	2-E10
		2-L8
	-68004-	2-E10
		2-L8
	-68005-	2-E10
		2-L8
	-70001-	2-K6
	-70002-	2-K6
	-70003-	2-K6
	-70004-	2-K6
	-70005-	2-K6
	-70006-	2-K6
	-70007-	2-K6
	-70008-	2-K6
	-70009-	2-K6
	-70010-	2-K6
	-70011-	2-K6
	-70012-	2-K6
	-70013-	2-K6
S	90587-08001-	2-J9
	90910-01006-	1-J3
	-01012-	1-J3
	-02046-	1-H1
	-02050-	1-H1
	-02054-	1-M1
	-02057-	1-M1
	-02070-	1-H1
	-04012-	3-L2
	-05152-	1-L2
	-05155-	1-G4
	-06036-	1-L2
	-09070-	1-M1
	-09072-	1-M1
	-12033-	1-A7
	90913-01003-	1-E3
	-01013-	1-E3
	-01014-	1-E3
	-02048-	1-I3
	-02050-	1-I3
	-02051-	1-I3
	-03012-	1-I3
	-03018-	1-I3
	-03019-	1-I3
	-05007-	1-J3
	-05020-	1-J3

	PART NUMBER	LOCATION
	90913-05021-	1-J3
	90915-01014-	1-M1
	-01015-	1-B2
	90916-01056-	1-E5
	-01163-	1-E5
	-01172-	1-E5
	-02093-	2-B12
	-02153-	2-B12
	-03045-	1-D5
	-03052-	1-C5
	-03059-	1-D5
	-03071-	1-C5
	90917-04006-	1-R6
	-04052-	1-C6
	-06003-	1-B6
	-06005-	1-B6
	-06012-	1-B6
		1-C6
	-06024-	1-B6
		1-C6
	-10020-	3-A10
	-10038-	1-A7
	-10057-	1-I6
		1-J6
	-11023-	1-A7
	-11024-	1-A7
	90919-01065-	1-D7
	-02083-	1-D7
	-02113-	1-D7
	-03065-	1-E7
	-12345-	1-E7
	-12346-	1-E7
	-12347-	1-E7
	-12348-	1-D7
	-12349-	1-D7
	-12372-	1-E7
	-13164-	1-D7
	-21325-	1-D7
	90923-02062-	1-H8
	-02065-	1-H8
	-02072-	1-H8
	-02073-	1-H8
	-02079-	1-H8
	-02100-	1-H8
	-05005-	1-K10
	-05013-	1-G4
	-05014-	1-G4
	-05016-	1-K10
	-06001-	1-K10
	-06008-	1-K10
	90925-01021-	1-A7
	-01029-	1-A7
	-03058-	1-A7
	-05035-	1-A7
	-05046-	1-A7
	90930-03058-	2-E11
	-03075-	2-G6
	-03094-	2-M3
	90937-01117-	2-E9
	-01118-	2-E9
	-01119-	2-E9
	-01120-	2-E9
	-01121-	2-E9
	-01122-	2-E9

PART NUMBER	LOCATION
90937-01132-	2-H7
-01136-	2-H7
-01140-	2-H7
-01147-	2-H7
-01148-	2-H7
-01149-	2-H7
-01150-	2-H7
-01151-	2-H7
-01152-	2-H7
-01153-	2-H7
-01154-	2-H7
-01155-	2-H7
-01156-	2-H7
-01157-	2-H7
-01158-	2-H7
-01184-	2-H7
-01191-	2-H7
-01192-	2-H7
-01193-	2-H7
-01194-	2-I7
-01198-	2-H7
-01199-	2-H7
-01200-	2-H7
90942-01007-	2-G9
-01030-	2-G9
-01047-	2-G9
-02034-	2-F9
-02044-	2-H10
-02052-	2-F9
-02053-	2-H10
-03079-	2-G9
-03080-	2-G9
-03081-	2-G9
-03082-	2-G9
-03083-	2-G9
-03084-	2-G9
-03085-	2-G9
-03086-	2-G9
-03107-	2-G9
-03009-	2-H9
90945-02032-	2-F12
-02034-	2-C11
-02048-	2-F12
90947-02267-	2-E1
-02358-	2-E1
90948-01003-	2-K14
-02002-	2-K14
-02015-	2-L14
-02017-	2-K14
-02032-	2-L14
-03004-	2-D15
-03007-	2-D15
-03011-	2-D15
	2-K14
-03015-	2-K14
90949-01213-	2-B10
90950-01200-	1-F2
-01263-	1-E2
90980-04038-	4-I4
-04040-	4-I4
-05052-	4-I4
-07003-	4-C2
-07049-	4-C2
-07056-	4-C2

PART NUMBER	LOCATION
90980-07175-	4-C2
-07192-	4-C2
-07193-	4-C2
-07194-	4-C2
-07251-	4-C2
-08209-	4-I2
90981-01016-	4-A1
-01046-	4-A1
-11004-	4-J1
-11010-	4-K2
S -11014-	4-F3
-11018-	4-J1
	4-K1
	4-K2
-11020-	4-E1
	4-I1
-11022-	4-I2
	4-K1
	4-K2
-11024-	2-F8
	4-E3
	4-F3
-12015-	4-E1
	4-I1
S -16010-	4-I2
-16014-	4-C1
	4-F1
-16015-	4-F1
-16016-	4-C1
	4-H1
-16019-	4-J1
-16020-	2-H3
-16020-	4-F3
-16022-	4-F3
90982-01351-	4-L1
-01353-	4-L1
-01354-	4-L1
-01414-	4-L1
-02207-	4-L1
-03020-	4-M1
-05005-	4-L1
-07008-	4-C3
-08135-	4-F2
-08137-	4-F2
-08187-	4-F2
-08249-	4-F2
-09002-	4-C3
-09003-	4-C3
-09004-	4-C3
-09005-	4-C3
90986-02001-	4-G6
90987-01001-	4-F3
-01003-	4-F3
-01004-	4-F3
-02001-	4-F3
	4-G3
-02004-	4-F3
	4-G3
-02005-	4-G3
-02006-	4-F3
-02007-	4-F3
-03001-	4-G3
-03002-	4-G3
90999-00066-	3-H7

PART NUMBER	LOCATION
90999-00072-	3-G7
S -00104-	3-H7
-41138-	1-M8
-41147-	1-M8
-42200-	1-M8
-43080-	1-M8
-70067-	2-E14
-73060-	2-E11
-73087-	1-D3
-73088-	1-D3
-73089-	2-J6
91121-51070-	2-E1
	2-K12
91511-60850-	2-K3
91611-60816-	1-J3
-60828-	2-B2
-60855-	1-J3
-60860-	1-J3
-60865-	1-J3
-61055-	2-B2
S 91651-61030-	2-G6
S -61040-	2-G6
92112-60828-	1-K3
92122-61028-	1-J5
92132-60822-	1-J5
-60825-	1-J5
94115-71200-	2-K13
94184-61200-	2-H12
95161-10322-	2-M2
-10416-	1-F3
-10519-	1-F3
	1-I3
95331-10020-	3-L9
-10036-	3-L9
95332-04020-	1-E9
-06010-	3-L9
-06020-	3-A10
-06030-	3-A10
	3-B10
	3-L9
-06040-	3-A10
	3-L9
	3-M9
-06060-	3-B10
	3-L9
-08020-	1-I8
	3-M9
-08030-	3-M9
-08040-	3-M9
-08060-	3-M9
-08080-	3-M9
S -10020-	3-A10
-10022-	3-L9
-10036-	3-L9
95411-10095-	4-D6
-19930-	2-F7
-19960-	2-F7
	4-D6
95441-09170-	2-G13
-09200-	2-F7
	2-G13
-09240-	2-H13
	2-K1
-09250-	2-G13

PART NUMBER	LOCATION
95441-09270-	2-K1
-09340-	2-F7
96111-10270-	1-H4
S -10360-	1-I6
-10380-	1-I6
-10510-	1-F5
-10530-	1-F5
-10560-	1-E5
	1-F5
-10580-	1-F5
-10650-	1-G6
-10690-	1-G6
-10710-	1-G6
-10780-	1-G6
-10830-	1-G6
96112-10250-	1-H4
-10330-	1-C5
-10380-	1-I6
96132-30600-	2-B10
	2-C9
-30800-	1-I8
96150-01600-	2-L5
96151-01700-	2-J11
-02000-	2-A13
-02500-	2-A5
96152-00300-	2-C11
96160-00500-	2-L13
-01000-	2-L1
-01200-	2-C8
-01500-	2-B8
96335-11600-	1-A2
96395-71400-	1-I8
96411-11200-	1-I1
-11400-	1-A2
-11800-	1-A2
-12000-	1-I5
-12500-	1-I1
-12800-	1-A2
	1-I1
-13000-	1-A2
-13500-	1-A2
-41200-	1-I1
-41400-	1-A2
-42000-	1-A2
	1-I1
-42500-	1-A2
	1-I1
-42800-	1-A2
-42800-	1-I1
-43000-	1-A2
	1-I1
-43500-	1-A2
-45000-	1-A2
	1-I1
96431-03833-	1-M1
-23814-	1-M1
-53828-	1-M1
96432-23814-	1-M1
96710-01007-	2-J11
-01008-	1-M9
-01010-	2-A11
-01013-	2-L11
-01014-	2-K11
-02014-	2-B8

PART NUMBER	LOCATION
96710-02045-	2-C11
96711-19007-	2-J11
-19010-	2-A11
	2-B3
	2-D7
-19013-	2-J11
	2-L11
-19014-	2-K11
-19016-	2-H11
-24012-	2-D6
-24014-	2-B8
S -24023-	2-A10
S	2-B9
-24045-	2-C11
96740-02063-	1-H8
96812-50240-	2-E1
-50320-	2-E1
96940-33005-	2-C14
-33605-	2-D14
-33805-	2-C14
	2-D14
-34305-	2-C14
-39855-	2-C14
97100-06205-	2-D6
97153-06205-	2-D6
-06332-	2-M2
97154-06308-	2-K2
97600-30307-	2-K6
97610-30303-	2-F14
97619-30306-	2-F10
	2-K8
-30308-	2-E10
-30308-	2-K8
99118-62910-	4-C3
-62915-	4-C3
-62920-	4-C3
99132-11075-	4-H1
-11230-	4-K1
-11270-	4-C1
	4-F1
-12034-	4-I2
	4-K2
-1,080-	4-C1
-12100-	4-J1
-21270-	4-F1
99134-12030-	4-I2
	4-K2
99142-87175-	4-L1
99332-01030-	4-K6
-01395-	4-K6
-11250-	4-K6
-11260-	4-K6
99343-01195-	1-D5
-11070-	1-D5
-11095-	1-D5
-11120-	1-H6
-11510-	2-B12
-11570-	2-B12
99552-20100-	4-B6
-20200-	4-A6
	4-B6
-30100-	4-B6
-30300-	4-A6
-30500-	4-M5

PART NUMBER	LOCATION
99553-30210-	1-G4
-30280-	1-H4
99554-70185-	1-E5
99555-30210-	1-G4
-30280-	1-H4
-40090-	1-C5
99556-20055-	4-A6
-20090-	4-B6
-20095-	4-B6
-20100-	4-B6
-20150-	4-A6
-30055-	4-M5
S -30060-	4-B6
S -30100-	4-B6
-30210-	4-A6
-30320-	4-A6
S -30500-	4-A6
S -30500-	4-M5
99911-10250-	1-B1
N -20250-	1-B1
99913-12000-	1-B1
99914-11012-	1-B1
-11417-	1-B1
99915-10700-	1-B1

NOTICE

FRAME NUMBER AND VEHICLE IDENTIFICATION NUMBER

1. FRAME NUMBER FJ60-123456

FRAME NUMBER IS GIVEN ON THE DASH COWL IN THE ENGINE ROOM. FUNCTION IN TOYOTA PARTS CATALOG IS LISTED IN THE REVISION REFERENCE CODE LIST TO IDENTIFY ENGINEERING CHANGE PERIOD AS BEFORE. SO, IN LOCATING PARTS CATALOG, TAKE A LOOK AT FRAME NUMBER ON CORRESPONDING VEHICLE.

REV. REF. CODE	ENGINE NO. OR FRAME NO.
1	FJ60-123456

2. NAME PLATE

NAME PLATE IS ATTACHED TO THE DASH COWL IN THE ENGINE ROOM. MODEL COLUMN INDICATES FULL MODEL CODE, SO, FOR MODEL INFORMATION, REFER TO THE NAME PLATE AS BEFORE.

PROCEDURE TO DETERMINE FRAME NUMBER FROM NAME PLATE IS ;

ⓐ + ⓑ =

FJ60-123456

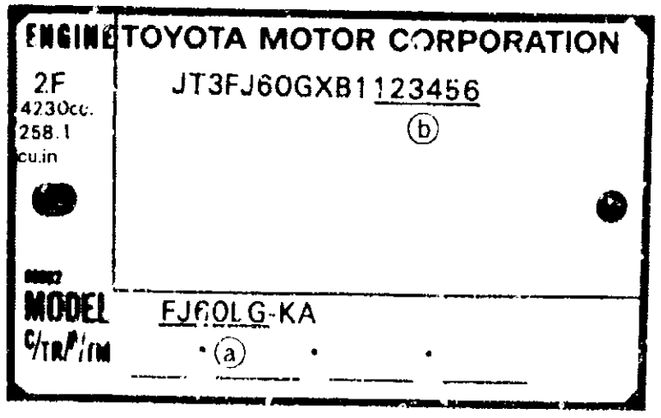

3. VEHICLE IDENTIFICATION NUMBER JT3FJ60GXB1123456

VEHICLE IDENTIFICATION NUMBER IS GIVEN TO VIN PLATE ON LEFT HAND OF DASH BOARD, CERTIFICATION REGULATION PLATE ON LEFT DOOR PILLAR, AND NAME PLATE.

NOTICE

FRAME NUMBERING IS STARTED FROM DIFFERENT STARTING FRAME NUMBER PER EACH ASSEMBLY LINE.

WHEN REFERRING TO STARTING FRAME NUMBER ON REVISION REFERENCE CODE LIST, BEAR FOLLOWING MATTER IN YOUR MIND.

Starting Frame Number Per Each Assembly Line.

Applicable Model \ Assembly Line	Toyota Motor Honsya Plant (A11)
BJ60–	000001 ~
FJ60–	000001 ~
HJ60–	000001 ~

REV. REF. CODE	ENGINE NO. OR FRAME NO.
455	FJ60-000001
	BJ60-000001
456	BJ60-002678
457	BJ60-002679
458	BJ60-004492
	FJ60-023632
459	BJ60-004493
	FJ60-023633
464	BJ60-004492
	BJ60-023632
465	BJ60-004493
	BJ60-023633
466	BJ60-010842
	FJ60-052956
467	BJ60-010843
	FJ60-0529[illegible]7
468	2F-636115
469	2F-636116
470	BJ60-008225
	FJ60-038414
471	BJ60-008226
	FJ60-038415
472	2F-659319
473	2F-659320
474	BJ60-010392
	FJ60-950306
475	BJ60-010393
	FJ60-950307
476	3B-502601
477	3B-502602
480	BJ60-0011525
	FJ60-0071392
481	BJ60-0011526
	FJ60-0071393
482	BJ60-0011092
	FJ60-0950351
483	BJ60-0011093
	FJ60-0950352
486	BJ60-012311
	FJ60-085310
487	BJ60-012312
	FJ60-085311
488	BJ60-0011151
	FJ60-0063733
489	BJ60-0011152
	FJ60-0063754
490	FJ60-0072410
498	BJ60-0012316 PLANT•A11
	FJ60-0085469 PLANT•A11
499	BJ60-0012317 PLANT•A11
	FJ60-0085470 PLANT•A11
500	2F-787707
501	2F-787708
502	BJ60-011863
	FJ60-076126
503	BJ60-011864
	FJ60-076127
507	FJ60-099857 PLANT•A11
514	BJ60-014863
515	BJ60-014864
534	2F-848881
535	2F-848882
536	BJ60-014477
	FJ60-121256
537	BJ60-014478
537	FJ60-121257
538	FJ60-127176
	BJ60-014863
539	FJ60-127177
	BJ60-014864
540	FJ60-120681
541	FJ60-120682
542	2F-862659
543	2F-862660
544	2F-862582
545	2F-862583
546	2F-860690
547	2F-860691
554	FJ60-127359
	BJ60-015766
555	FJ60-127360
	BJ60-015767
558	BJ60-014607
	FJ60-123594
559	BJ60-014608
	FJ60-123595
562	FJ60-127352
563	FJ60-127353
564	BJ60-015622
565	BJ60-015623
567	HJ60-033418 PLANT• A11
574	HJ60-033923
	PLANT• A11
575	HJ60-033924
	PLANT• A11
576	PLANT• A11
577	PLANT• A11
584	3B-0707[illegible]3

REVISION REFERENCE CODE LIST

B15

REV. REF. CODE	ENGINE NO. OR FRAME NO.	REV. REF. CODE	ENGINE NO. OR FRAME NO.	REV. REF. CODE	ENGINE NO. OR FRAME NO.
585	3B-0707774				
600	FULL DETAILS OF REVISION REFERENCE CODE ARE NOT DETERMINED. THEY WILL APPEAR ON THE NEXT ISSUE.				
601	FULL DETAILS OF REVISION REFERENCE CODE ARE NOT DETERMINED. THEY WILL APPEAR ON THE NEXT ISSUE.				

REV. REF. CODE	ENGINE NO. OR FRAME NO.	REV. REF. CODE	ENGINE NO. OR FRAME NO.	REV. REF. CODE	ENGINE NO. OR FRAME NO.

LAND CRUISER Station Wagon U. S. A.

PRODUCTION FRAME NUMBER REFERENCE LIST

Applicable Model / Production Date / Assembly Line	8001	8002	8003	8004	8005	8006	8007	8008	8009	8010	8011	8012
BJ60 TMC Honsya Plant								000001	000020	000200	000401	000716
FJ60 TMC Honsya Plant								000001	000713	001986	003036	004308

Applicable Model / Production Date / Assembly Line	8101	8102	8103	8104	8105	8106	8107	8108	8109	8110	8111	8112
BJ60 TMC Honsya Plant	001028	001311	001720	002192	002534	002918	003338	003779	004082	004498	005048	005600
FJ60 TMC Honsya Plant	005670	007107	008697	010560	012579	014514	016659	019194	021109	023671	025965	028337

Applicable Model / Production Date / Assembly Line	8201	8202	8203	8204	8205	8206	8207	8208	8209	8210	8211	8212
BJ60 TMC Honsya Plant	006196	006712	007307	008002	008723	009248	009730	010217	010540	010845	010934	011000
FJ60 TMC Honsya Plant	030472	032596	034980	037650	040225	042837	045429	048330	050298	052992	055098	058504

Applicable Model / Production Date / Assembly Line	8301	8302	8303	8304	8305	8306	8307	8308	8309	8310	8311	8312
BJ60 TMC Honsya Plant	011273	011148	011273	011389	011520	011719	011894	012035	012196	012325	012435	012638
FJ60 TMC Honsya Plant	066186	063661	066186	068802	071304	073830	076615	079891	082239	085647	088849	091838

Applicable Model / Production Date / Assembly Line	8401	8402	8403	8404	8405	8406	8407	8408	8409	8410	8411	8412
BJ60 TMC Honsya Plant	012757	012896	013089	013321	013546	013798	013991	014217	014406	014632	014866	015045
FJ60 TMC Honsya Plant	0958314	097754	100915	104147	107446	110866	114414	117871	120722	123956	127349	

Applicable Model / Production Date / Assembly Line	8501	8502	8503	8504	8505	8506	8507	8508	3509	8510	8511	8512
BJ60 TMC Honsya Plant	015271	015437	015624	015767	015940	016180	016498	016701	016890	017143		
FJ60 TMC Honsya Plant			127354	127360	127865	128372	128885	129880	130484	131590	133007	
HJ60 TMC Honsya Plant										000011	033397	033933

Applicable Model / Production Date / Assembly Line	8601	8602	8603	8604	8605	8606	8607	8608	8609	8610	8611	8612
FJ60 TMC Honsya Plant	133049	133050	133051	133360	133697							
HJ60 TMC Honsya Plant	034450	034821	035183	035683	036079							

I. MODELS COVERED & CHARACTERISTICS

TOYOTA LAND CRUISER Station Wagon (Production from Aug., '80)

Vehicle Appearance

Station Wagon (8008–)

MP 1407

I. MODELS COVERED & CHARACTERISTICS

TOYOTA LAND CRUISER Station Wagon

Model	Engine	Production Period	Characteristic Expressions in Catalog Model Column				Model Name
BJ60LV-KK	3B	8008–8110	WGV	MTM	4F	CND	Station Wagon
FJ60LV-KK	2F	8008–8110	"	"	"	"	"
FJ60LG-KA	2F	8008–	WGG	"	"	USA	"
BJ60LG-KK	3B	8110–8210	"	"	"	CND	"
BJ60LG-MK	"	8210–8510	"	"	5F	"	"
HJ60LG-MK	2H	8510–	"	"	"	"	"
HJ60LG-PK	"	8510–	"	ATM	4FC	"	"

WGV Station Wagon
WGG Station Wagon G type

MTM Manual transmission
4F MTM, 4-speed floor shift
5F MTM, 5-speed floor shift
ATM Automatic transmission
4FC ATM, 4-speed floor shift

USA For United States of America
CND For Canada

GUIDE TO CONTENTS

1. MODELS COVERED & CHARACTERISTICS ..... D 15 , E 15 (included in each fiche)

2. MARK & ABBREVIATION ..... B 16, C 16 (included in each fiche)

3. INDEX

ILLUSTRATED INDEX ..... D 16 thru K 16 (included in each fiche)

FIGURE NUMBER INDEX ..... L 16, M 16 (included in each fiche)

4. ILLUSTRATIONS & TEXT ..... From 1-A1 (included in each fiche)

The contents (illustrations & text) have been divided into groups by function in the following sequence:

Engine

Fuel

Power train · Chassis

Body

Electrical

5. APPENDICES

PART NAME ☞ LOCATION LIST ..... A 10 thru C 12 (included in the fiche No. 4 of 4)

PART NUMBER ☞ LOCATION LIST ..... A 13 thru F 14 (included in each fiche)

REVISION REFERENCE CODE LIST ..... A 15 , B 15 (included in each fiche)

PRODUCTION FRAME NUMBER REFERENCE LIST ..... C 15 (included in each fiche)

Note : SST (Special Service Tools) are not included in this parts catalog.

For related part number information can be noted in SST List, Service Bulletin and Repair Manual.

MARK & ABBREVIATION LIST

B16

(1) Abbreviations

Mark	Definition
..	Among
,	And
+	And (Plus)
–	Excluded (Minus)
#	All series
*	All series (All)
1SR	First
2D	2-door
2DS	2-door Sedan
2WD	2-door Station Wagon
2FC	2-speed Automatic Transmission, Floor Shift
2HC	2-speed Automatic Transmission, Column Shift
2ND	Second
3D	3-door
3DS	3-door Sedan (Hatch-back)
3FC	3-speed Automatic Transmission, Floor Shift
3H	3-speed Manual Transmission, Column Shift
3HC	3-speed Automatic Transmission, Column Shift
3RD	Third
3QT	0.75 ton
4D	4-door
4DS	4-door Sedan
4DW	4-door Station Wagon
4F	4-speed Manual Transmission, Floor Shift
4FC	4-speed Automatic Transmission, Floor Shift
4H	4-speed Manual Transmission, Column Shift
4TH	Fourth
5D	5-door
5DS	5-door Sedan (Hatch-back)
5F	5-speed Manual Transmission, Floor Shift
5TH	Fifth
6F	6-speed Manual Transmission, Floor Shift
&	And
A	Amperes
ABV	Air By-pass Valve
ACV	Air Control Valve
AI	Air Injection
ARAKAWA	Arakawa Auto Body Company Limited
ASCO	Aisin Seiki Company Limited
ASSY	Assembly
ASV	Air Switching Valve
ATM	Automatic Transmission
B-	Brownish .....
BN	Bench seat
BRIDGESTONE	Bridgestone Company Limited
BRK	Brake
BSTR	Booster
BVSV	Bimetal Vacuum Switching
CBR	Carburetor system
CBU	Completely Built Unit
CITIZEN	Rhythm Watch Company Limited
CM	Centimeters
CM2	Centimeters square
CND	For Canada
CP	Coupe
CR-PLATED	Chrome Plated
CTR	Center
CVT	Convertible
CW	Coil Winding
D-	Dark .....
DENSO	Nippondenso Company Limited
DIFF	Differential
DLX	Deluxe type
DSL	Diesel
DUNLOP	Dunlop Rubber Company (Japan) Limited
DX	DX type (Deluxe type)
EDIC	Electronic Diesel Injection Control
EFI	Electronic Fuel Injection System
EGR	Exhaust Gas Recircuation System
EGR -VM	EGR Vacuum Modulator
ESC	Electronic Skid Control
EXCL/	Exclude .....
FB	Fabric
FR	Front
FUJI-THOMSON	Fuji-Thomson Company Limited
G	Grams
G-	Greenish .....
GL	GL type
GS	Japan Storage Battery Company Limited
GT	GT type
GTS	GT-S type
HA	High Altitude Specification
HAC	High Altitude Compensatar
HDX	Hi-deluxe type
HLF	0.5 ton
HT	Hardtop
HVY	Heavy
ID	Inside Diameter (mm)
IKI	Ichikoh Industries Limited
IM-FB	Imitation Fabric
IN	Inches
ISO	International Organization for Standardization
IV	Incomplete Vehicles
IV1	Chassis & Windshield
IV2	Chassis & Cab
JECO	Jeco Company Limited
JKC	Jidosha Kiki Company Limited
KAYABA	Kayaba Industry Company Limited
KCAL	Kilo Calorie
K-FB	Knit Fabric
K-TY	Knit Tape Yarn
KG	Kilograms
KG/CM2	Kilograms per centimeter square
KM	Kilometers
KOBE	Shinkobe Electric Machinery Company Limited
KOITO	Koito Manufacturing Company Limited
KOKI	Toyoda Machine Works Company Limited (Toyoda Koki)
KOYO	Koyo Seiko Company Limited
KUZEH	Kuzeh Company Limited
KW	Kilowates
L	Length (mm)
L-	Light .....
LB	Liftback
LB	Pounds
LE	LE type
LG	LG type
LH	Left-hand
LHD	Left-hand Drive
LPB	Less Passive Belt
LT	LT type
LSD	Limited Slip Differential
LWR	Lower
M	Meters
-M	.... Metallic
MARUKO	Maruko Keihoki Company Limited
MATSUSHITA	Matsushita Electric Industrial Company Limited
M/C	Master Cylinder
MM	Millimeters
MTM	Manual Transmission
MURAKAMI	Murakami Kaimeido Company Limited
N	Number of teeth
NACHI	Fujikoshi Limited
NIHON	Nihon Thermostat Company Limited
NOK	Nippon Oilseal Industry Company Limited
NSK	Nippon Seiko Company Limited
OD	Outside Diameter (mm)
O/S	Oversize
P	Pitch
P	Purplish .....
P & B	Proportioning & By-pass Valve
PCV	Positive Crankcase Ventilation System
PF	Perforated foam coated vinyl leatherette
PIC	Pickup
PS	Power Steering
PTO	Power Take-off
PV	Proportioning Valve
R	Ratio
RB	With Roll bar
RCB	Regular Cab
REP	Repair
RH	Right-hand
RHD	Right-hand Drive
RR	Rear
S	Screw Length (mm)

(U.S.A. 1/2)

MARK & ABBREVIATION LIST

C16

Mark	Definition	Mark	Definition
SD	Swing Door	TP	Vinyl Softtop (Tarpaulin)
SDT	Standard Turbo type	TPS	Vinyl Softtop (Tarpaulin), Standard type
SDX	Super Deluxe type		
SED	Sedan	TR	Truck (Pickup)
SL	SL type	TVSV	Thermostatic Vacuum Switching Valve
SM-SP	Semi Separate Seat		
SMG	Speedometer Gear	TWC	Twin Cam
SP	Separate Seat	TWT	Twin Cam, Turbo Cherger System
SP-BN	Split Bench Seat	TVTV	Thermostatic Vacuum Transmitting Valve
SPEC	Specification		
SPL	Special type	UPR	Upper
SPR	Supra (CELICA Supra)	U/S	Undersize
SR	SR type	USA	For the United States of America
SR5	SR-5 type	V=	Volts
SRT	Turbo – SR-5	V	Van or Hardtop
S/S	Semisize	VCV	Vacuum Control Valve
SSV	Super Soft Vinyl Leather	VKC	Van (Hardtop), with swing type back door
ST	ST type		
STD	Standard type	VL	Vinyl Leatherette
STRG	Steering	VLC	Van (Hardtop), with lift up and swing out back door
SUMITOMO	Sumitomo Electric Industry Company Limited	VLS	Van (Hardtop), with lift up and swing out back door
SW	Switch		
T	Thickness (mm)	VSG	Van, Side Glass
T1	Truck (Pickup, low loader 1-side open)	VSP	Van, Side Panel
		VSV	Vacuum Switching Valve
TAKATA	Takata Corporation	VTV	Vacuum Transmitting Valve
TANAKA	Tanaka Instrument Company Limited (T.N.K.)	W	Watts
		W/ ...	With ...
		W/C	Wheel Cylinder
TBO	Turbo Cherger system	WD	Wire Diameter (mm)
TBR	T-Bar Roof	WG	Station Wagon
TD	Turbo Cherger, Diesel system	WGV	Station Wagon (V)
TEMS	Toyota Electronic Modulated Suspension	WGG	Station Wagon (G)
		W/O	Without ....
TEN	Fujitsu Ten Company Limited	WPB	With Passive Belt
T/L	Tubeless	WSW	White Side Wall Tire
TMC	TOYOTA MOTOR CORPORATION	W/T	With Tube
		XTR	Xtra Cab
TOKAIRIKA	Tokai Rika Company Limited	YAZAKI	Yazaki Corporation
TOKIKO	Tokiko Company Limited	YOKOHAMA	The Yokohama Rubber Company Limited
TOSHIBA	Tokyo Shibaura Electric Company Limited	YUASA	Yuasa Battery Company Limited
TOYO	Toyo Rubber Industrial Company Limited		
TOYOTA	Toyota Motor Corporation		

(2) Abbreviations Under Heading R/P and QTY" in Text

Heading	Mark	Definition
R/P	#	Old parts number (Old)
	*	Modified old parts number which has been substituted by a multiple of parts and/or if substituted parts are specified by applicable models or other determining specifications, refer to SUBSTITUTE SUPPLY PARTS LIST (S.S.P.L.) for detailed information. (Old)
	┐	New main part number of set substitution (New)
	•	Part number to be attached to main part (New)
QTY	33	Required quantity

(3) CHANGES TO TEXT & APPENDICES

Certain codes are used to indicate changes to the text and/or appendix. These codes appear in the marginal area of the affected page as follows:

CODE	LOCATION	EXPLANATION
C	Text	Changes of Parts Number, Model and Production Date
N	Appendix Text & Appendix	Newly available Toyota Part Number
S	Appendix Text & Appendix	Part application expanded to include other vehicle model(s).

(U.S.A. 2/2)

ILLUSTRATED INDEX

D16

ENGINE GROUP(1 / 2)

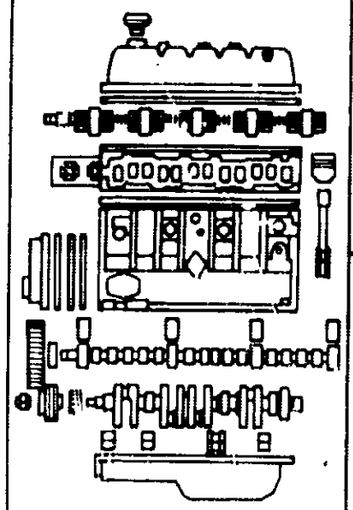

1-D1 (11-01)
Partial Engine Assembly

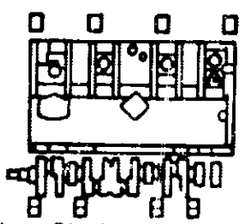

1-E1 (11-02)
Short Block Assembly

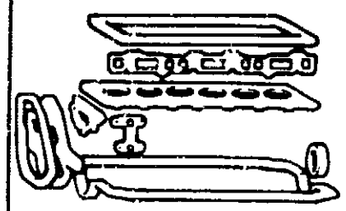

1-F1 (11-03)
Overhaul Gasket Kit

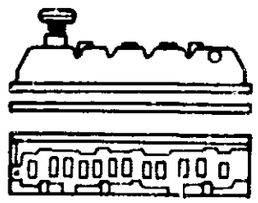

1-G1 (11-04) 1
Cylinder Head

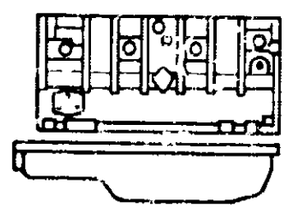

1-K1 (11-05) 2
Cylinder Block

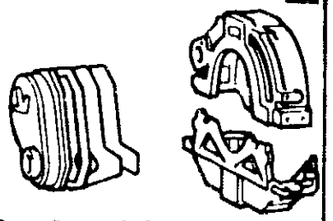

1-C2 (11-06) 3
Gear Cover & End Plate

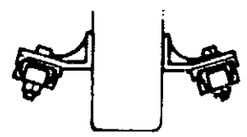

1-G2 (11-07) 4
Mounting

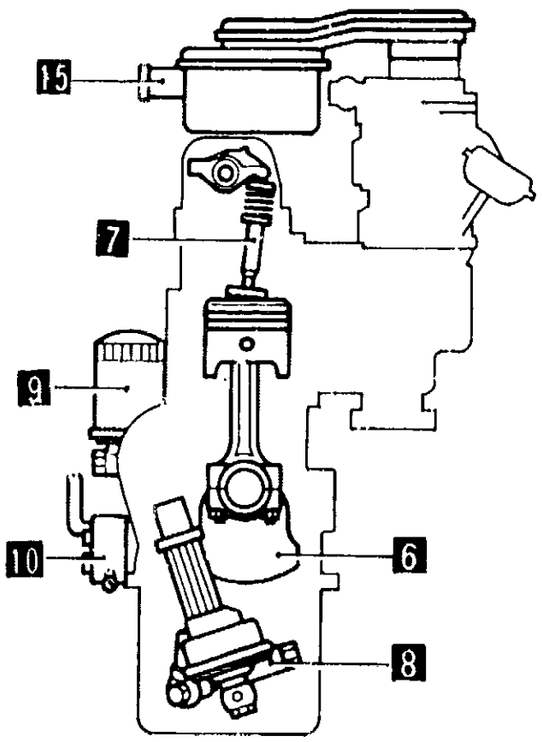

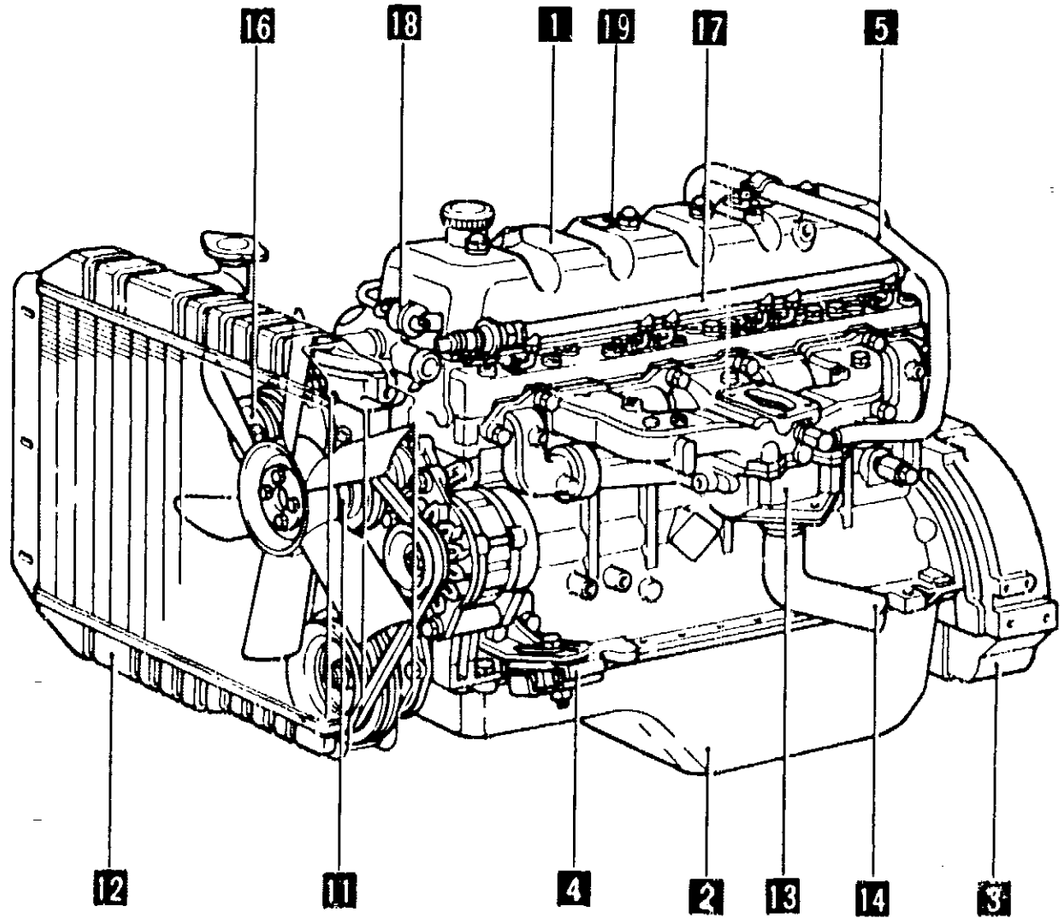

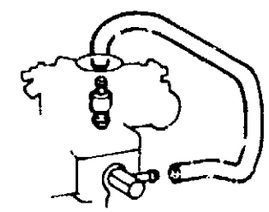

1-K2 (12-01) 5
Ventilation Hose

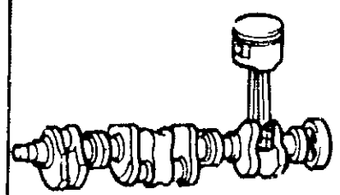

1-A3 (13-01) 6
Crankshaft & Piston

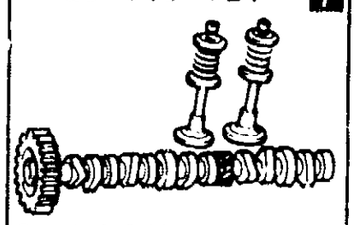

1-G3 (13-02) 7
Camshaft & Valve

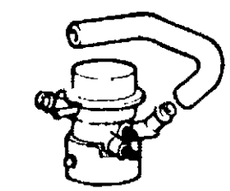

1-K6 (17-08) 18
Vacuum Piping

1-I6 (17-06) 17
Manifold AI System

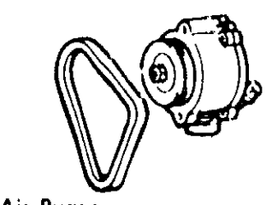

1-H6 (17-05) 16
Air Pump

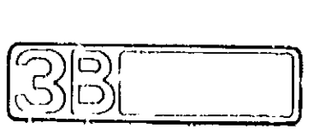

1-B7 (17-09) 19
Caution Plate

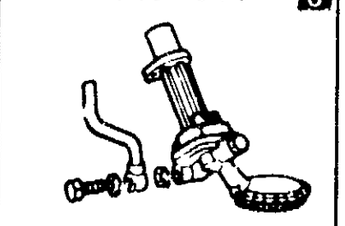

1-L3 (15-01) 8
Oil Pump

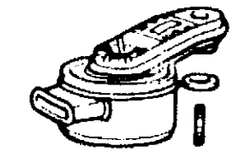

1-D6 (17-03) 15
Air Cleaner

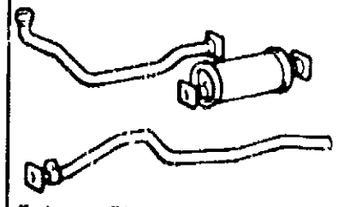

1-L5 (17-02) 14
Exhaust Pipe

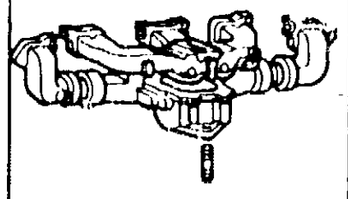

1-G5 (17-01) 13
Manifold

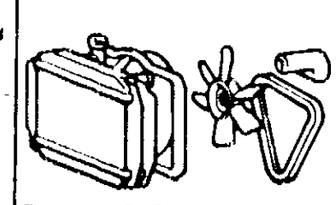

1-L4 (16-03) 12
Radiator & Fan

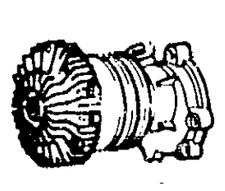

1-I4 (16-01) 11
Water Pump

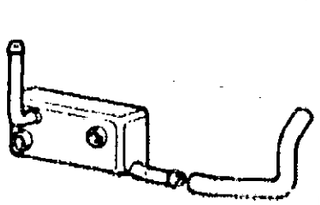

1-F4 (15-03) 10
Oil Cooler

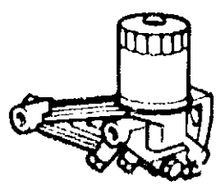

1-C4 (15-02) 9
Oil Filter

MA 8638

ILLUSTRATED INDEX

1-C7 (19-01) 1
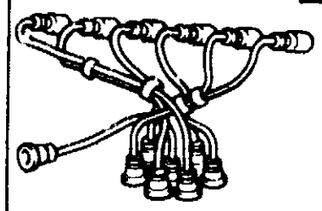
Ignition Coil & Cord

1-F7 (19-02) 2
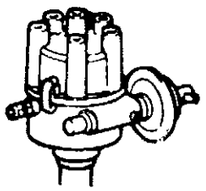
Distributor

1-I7 (19-03) 3
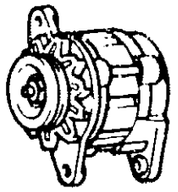
Alternator

1-B8 (19-04) 4
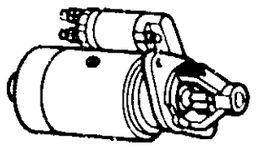
Starter

1-G8 (19-05) 5
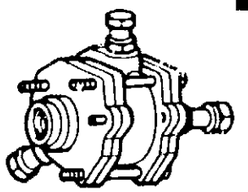
Vacuum Pump

1-I8 (21-01) 6
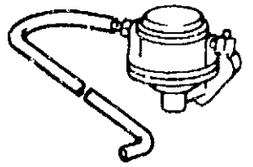
Fuel Pipe & Clamp

1-J8 (21-02) 7
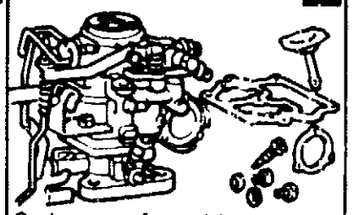
Carburetor Assembly

ENGINE, FUEL GROUP (2/2)

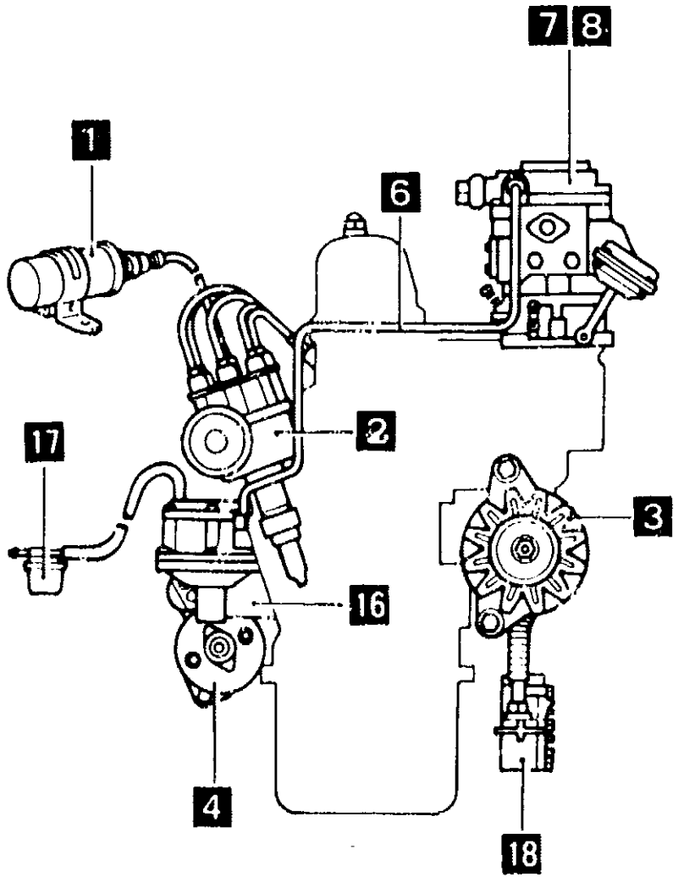

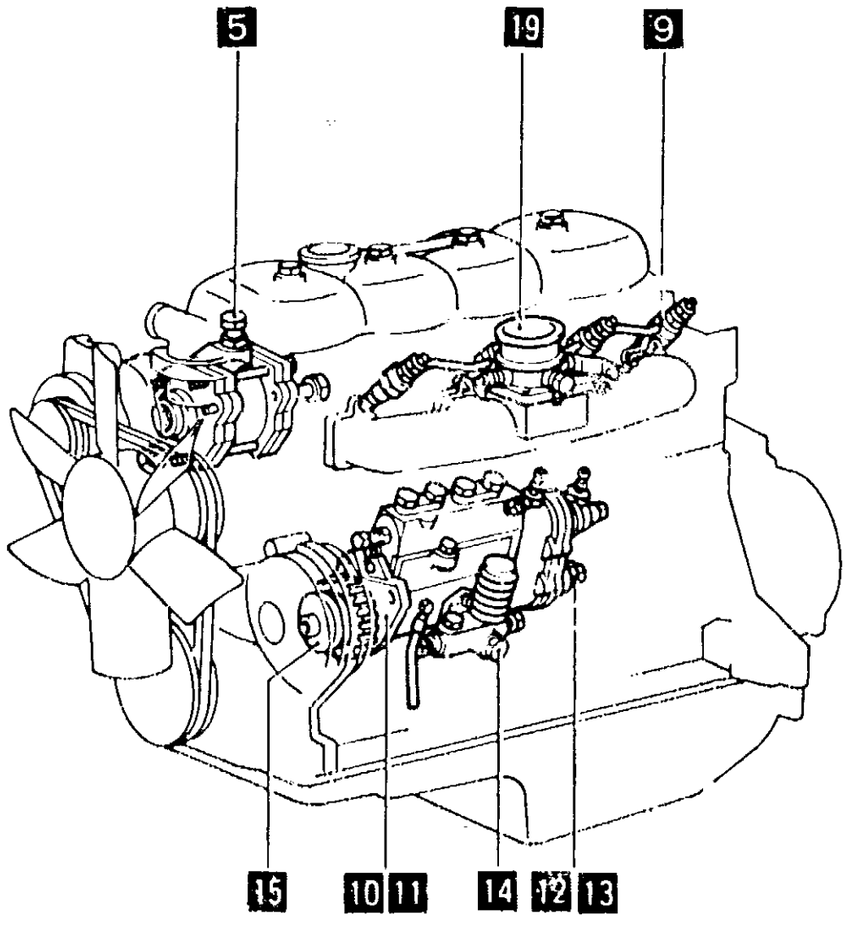

1-K8 (21-03) 8
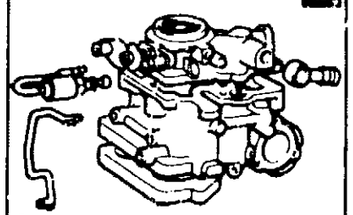
Carburetor

1-C9 (22-01) 9
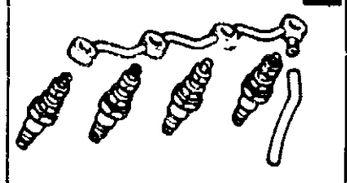
Injection Nozzle

1-F9 (22-02) 10
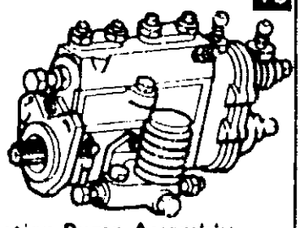
Injection Pump Assembly

1-H9 (22-03) 11
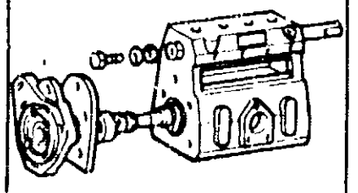
Injection Pump Body

1-D11 (26-06) 19
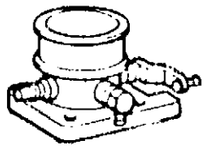
Venturi

1-B11 (25-01) 18
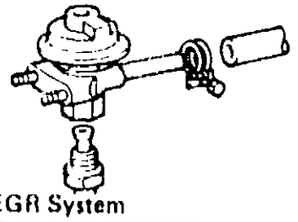
EGR System

1-L10 (23-02) 17
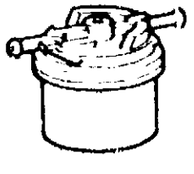
Fuel Filter

1-K10 (23-01) 16
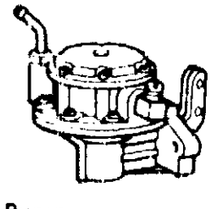
Fuel Pump

1-J10 (22-07) 15
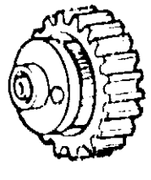
Automatic Timer

1-G10 (22-06) 14
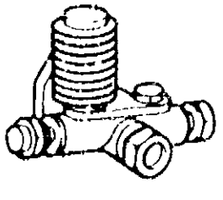
Fuel Feed Pump

1-B10 (22-05) 13

Mechanical Governor

1-K9 (22-04) 12
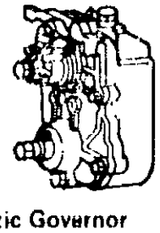
Pneumatic Governor

ILLUSTRATED INDEX

POWER TRAIN·CHASSIS GROUP (1/2)

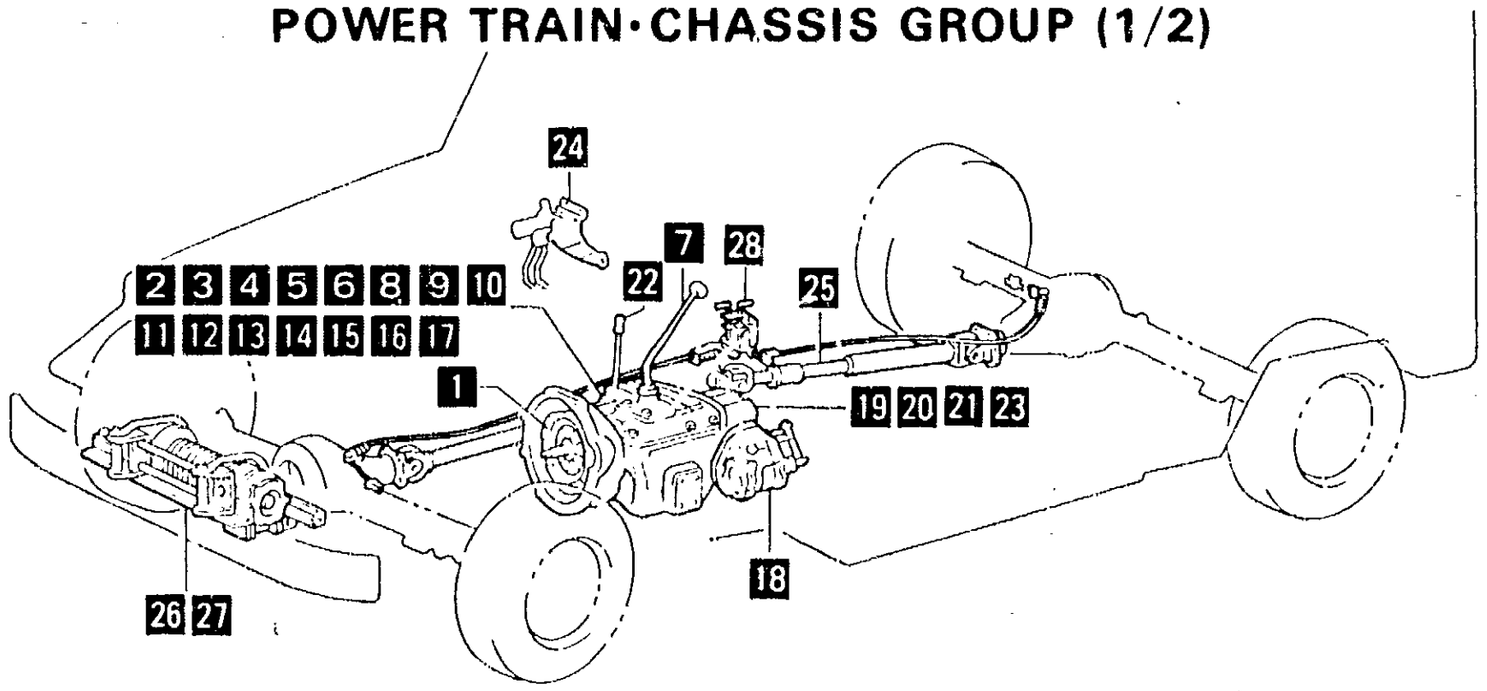

2-A1 (31-01) 1
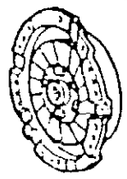
Clutch & Release Fork

2-C2 (33-01) 2
2-J3 (35-01)
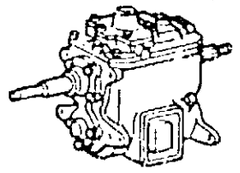
Transmission Assy

2-E2 (33-02) 3
2-M3 (35-03)
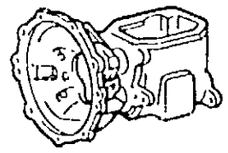
Transmission Case

2-H2 (33-04) 4
2-B4 (35-05)
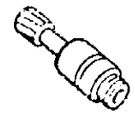
Speedometer Driven Gear

2-I2 (33-05) 5
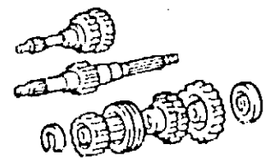
Transmission Gear

2-A3 (33-07) 6
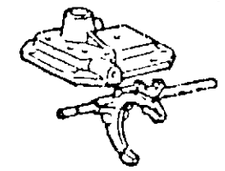
Gear Shift Fork

2-E3 (33-12) 7
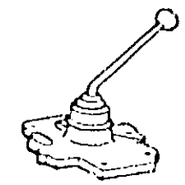
Shift Lever & Retainer

2-K3 (35-02) 8
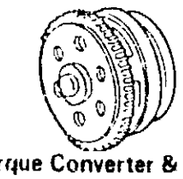
Torque Converter & Chain

2-C4 (35-06) 9
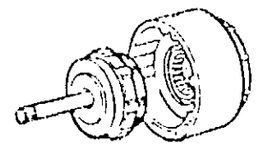
Overdrive Gear

2-F4 (35-07) 10
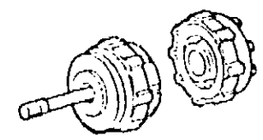
Multiple Disc Clutch

2-H4 (35-08) 11

Planetary Sun Gear

2-J4 (35-09) 12
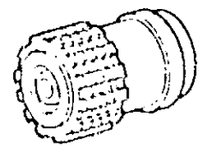
Brake No. 3

2-K4 (35-10) 13
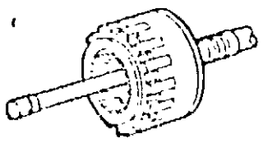
Planetary Gear

2-M4 (35-11) 14
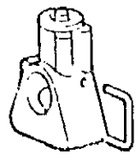
Governor

2-D5 (35-12) 15

Valve Body

2-K5 (35-13) 16
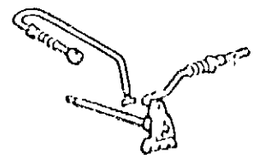
Throttle Link

2-M5 (35-14) 17
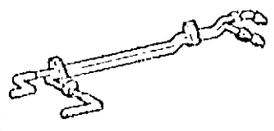
Oil Cooler & Tube

2-B6 (36-02) 18
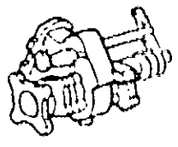
Power Take-off Case

2-E6 (36-08) 19
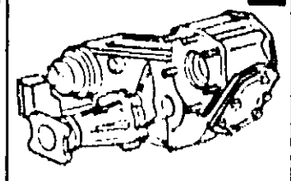
Transfer Assy

2-F6 (36-09) 20
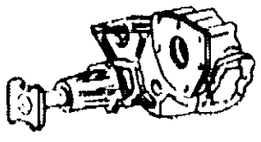
Transfer Case

2-I6 (36-10) 21
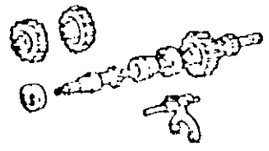
Transfer Gear

2-M6 (36-11) 22
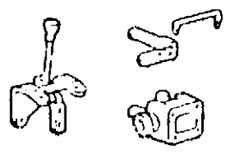
Transfer Lever

2-D7 (36-12) 23
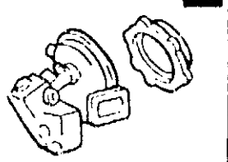
Diaphragm Cylinder

2-E7 (36-16) 24
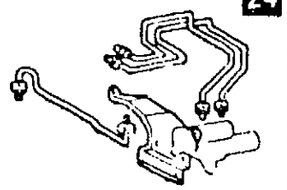
Hoist Cylinder Trunnion

2-G7 (37-01) 25
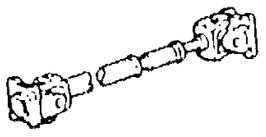
Propeller Shaft

2-K7 (38-01) 26
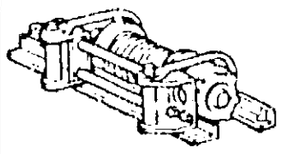
Winch Kit

2-L7 (38-02) 27
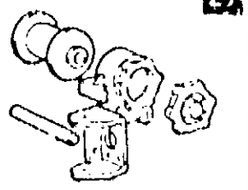
Winch

2-I9 (42-01) 28

Differential Lock Control

MC 7435-L

ILLUSTRATED INDEX

G16

POWER TRAIN·CHASSIS GROUP (2/2)

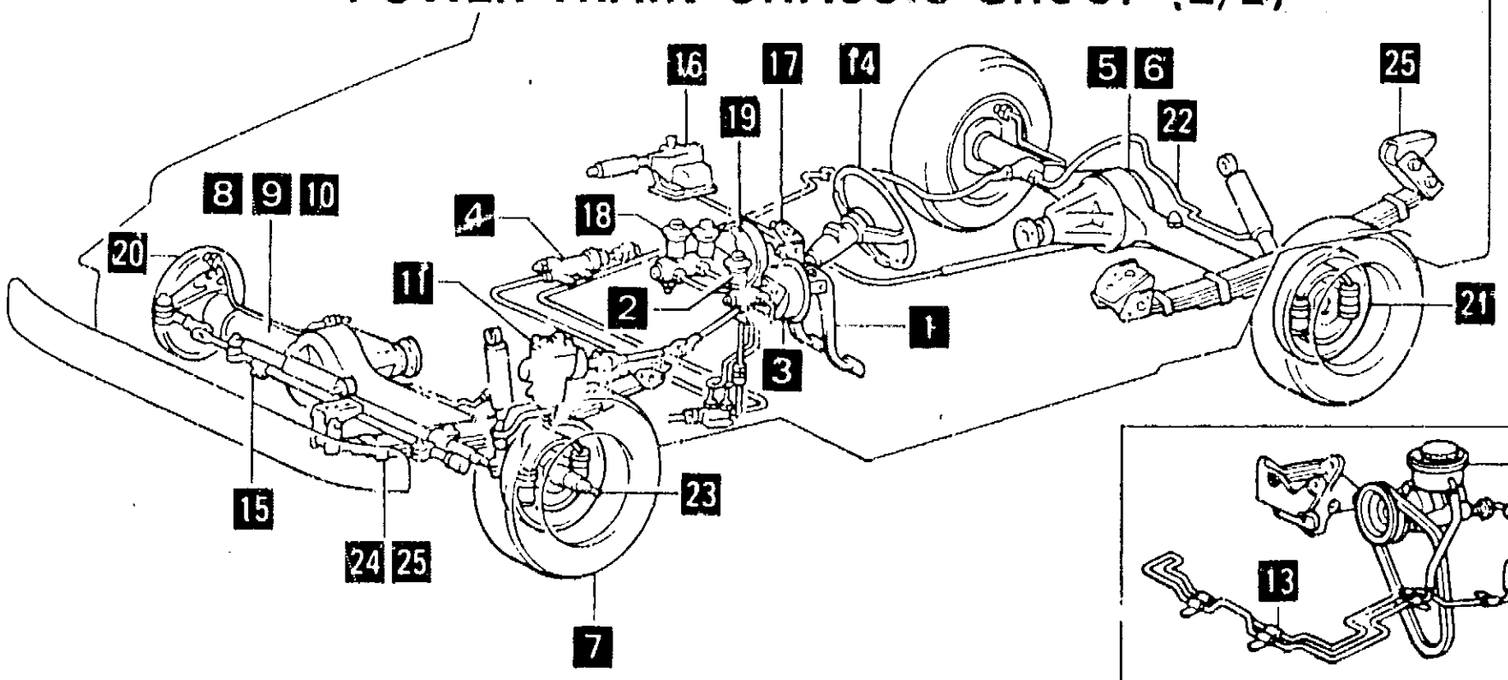

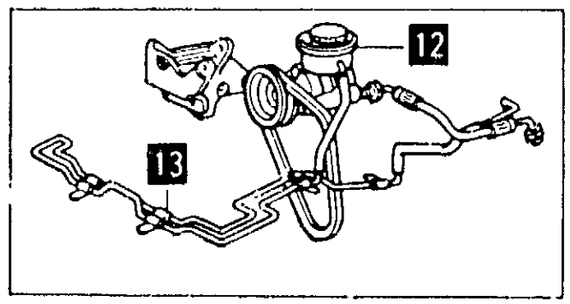

2-D1 (31-02) 1
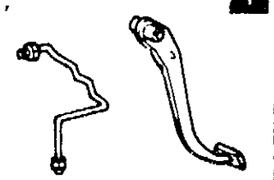
Clutch Pedal

2-F1 (31-03) 2
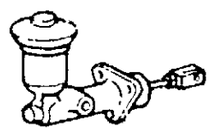
Clutch Master Cylinder

2-J1 (31-04) 3
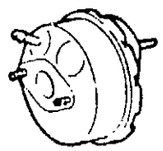
Clutch Booster

2-M1 (31-05) 4
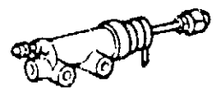
Clutch Release Cylinder

2-G8 (41-01) 5
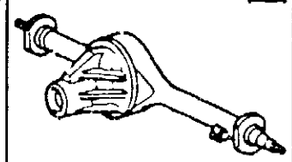
Rear Axle Housing

2-D9 (41-02) 6
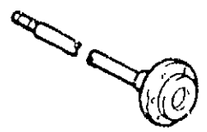
Rear Axle Shaft & Hub

2-G9 (41-03) 7

Disc Wheel & Cap

2-L9 (43-01) 8
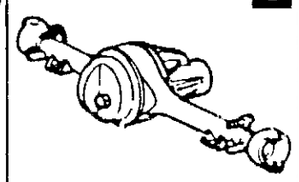
Front Axle Housing

2-G14 (48-03) 24
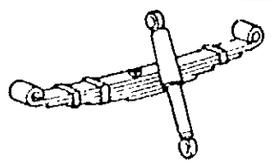
Front Spring

2-E14 (48-02) 23
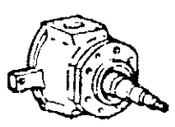
Front Axle Arm

2-A14 (47-08) 22
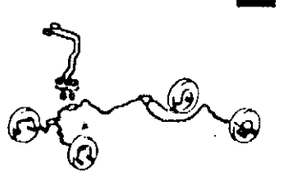
Brake Tube & Clamp

2-G10 (43-02) 9
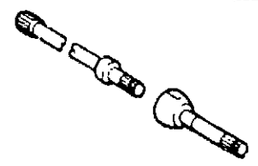
Drive Shaft

2-H10 (43-03) 10
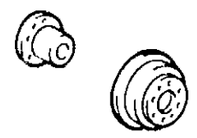
Front Axle Hub

2-J10 (45-01) 11
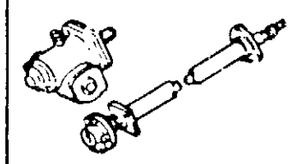
Steering Column

2-K13 (47-06) 21

Rear Backing Plate

2-M14 (48-04) 25
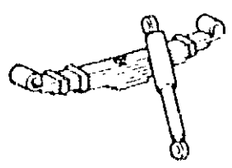
Rear Spring

2-G11 (45-02) 12
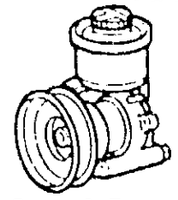
Vane Pump & Reservoir

2-I13 (47-05) 20
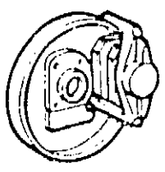
Front Disc Brake Caliper

2-C13 (47-03) 19

Brake Booster

2-M12 (47-02) 18
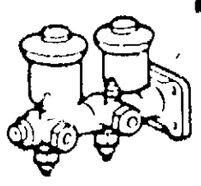
Brake Master Cylinder

2-K12 (47-01) 17
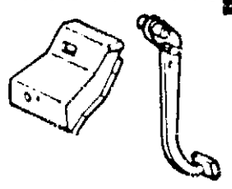
Brake Pedal & Bracket

2-I12 (46-01) 16
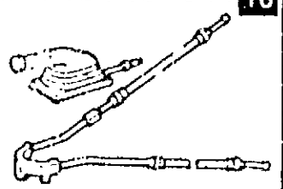
Parking Brake & Cable

2-G12 (45-05) 15
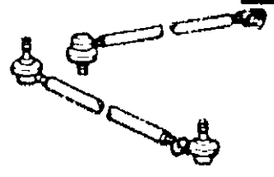
Steering Link

2-D12 (45-04) 14

Steering Wheel

2-M11 (45-03) 13
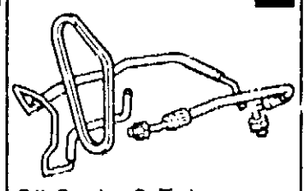
Oil Cooler & Tube

MC 7436-B

H16

ILLUSTRATED INDEX

3-A1 (51-51) 1

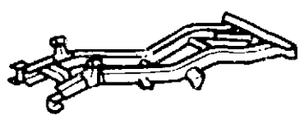

Frame

3-D1 (51-52) 2

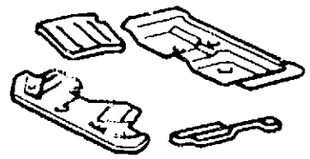

Crossmember & Under Cover

3-G1 (52-51) 3

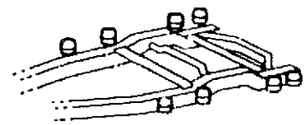

Cab & Body Mounting

3-J1 (52-52) 4

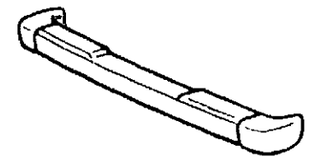

Front Bumper & Stay

3-M1 (53-51) 5

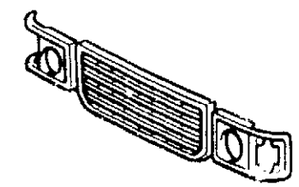

Radiator Grille

3-A2 (53-53) 6

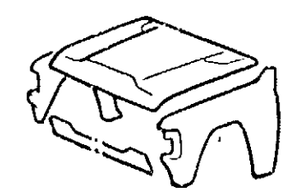

Hood & Front Fender

3-C2 (53-54) 7

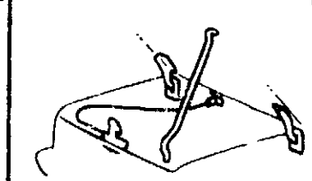

Hood Lock & Hinge

3-J8 (74-54) 21

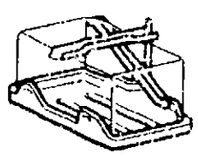

Battery Carrier

BODY GROUP (1/2)

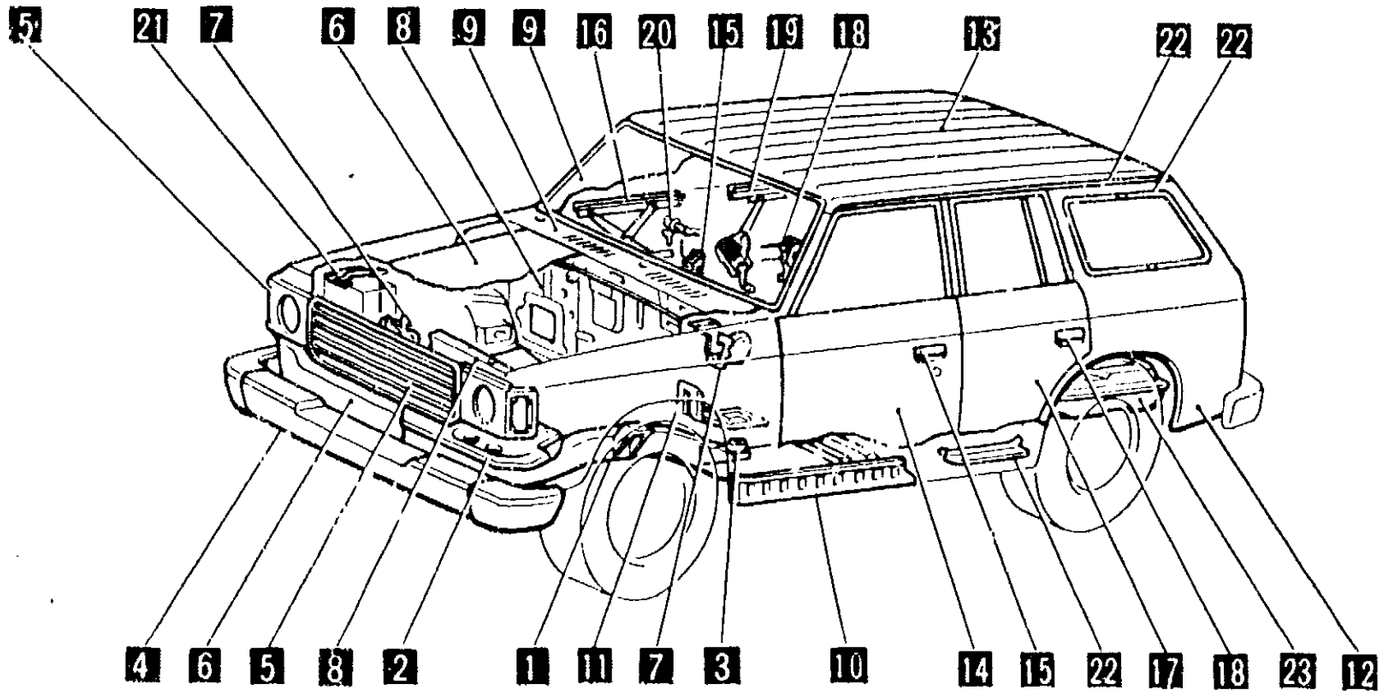

3-D2 (53-55) 8

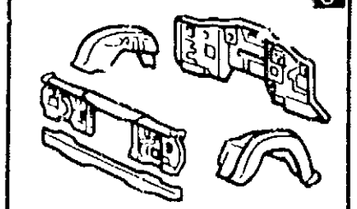

Fender Apron

3-G7 (67-65) 20

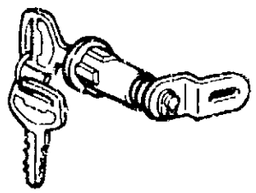

Lock Cylinder Set

3-L2 (55-53) 9

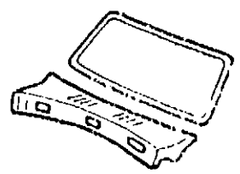

Cowl Panel & Glass

3-L6 (57-57) 19

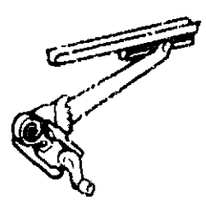

Rear Door Regulator & Hinge

3-A3 (57-51) 10

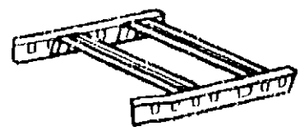

Floor Member

3-J6 (67-56) 18

Rear Door Lock & Handle

3-B9 (75-52) 22

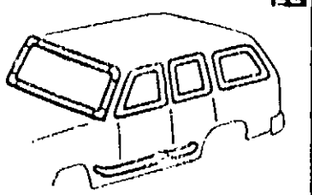

Moulding

3-F9 (77-51) 23

Fuel Tank & Tube

3-G6 (67-55) 17

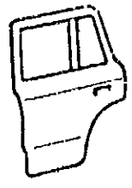

Rear Door Panel & Glass

3-E6 (67-54) 16

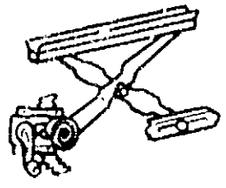

Front Door Regulator & Hinge

3-C6 (67-53) 15

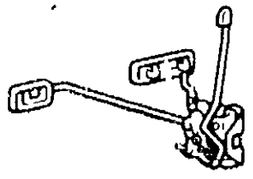

Front Door Lock & Handle

3-J5 (67-51) 14

Front Door Panel & Glass

3-K4 (61-53) 13

Roof Panel & Back Panel

3-F4 (61-51) 12

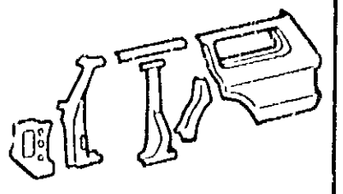

Side Member

3-K3 (58-53) 11

Floor Insulator

MB C154 A

ILLUSTRATED INDEX

3-F1 (51-53) 1

Spare Wheel Carrier

3-L1 (52-53) 2

Rear Bumper & Stay

3-G2 (55-51) 3

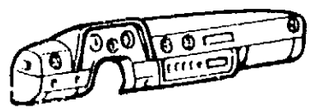

Instrument Panel

3-K2 (55-52) 4

Front Ventilator

3-C3 (58-51) 5

Front Floor Panel & Member

3-H3 (58-52) 6

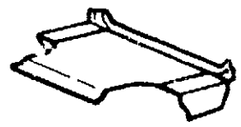

Rear Floor Panel

3-L3 (58-54) 7

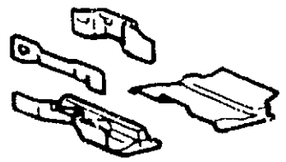

Floor Mat & Pad

3-C10 (78-51) 22

Accelerator Link

3-E9 (75-54) 21

Tool Box & Licens Bracket

3-M8 (75-51) 20

Emblem & Name Plate

BODY GROUP (2/2)

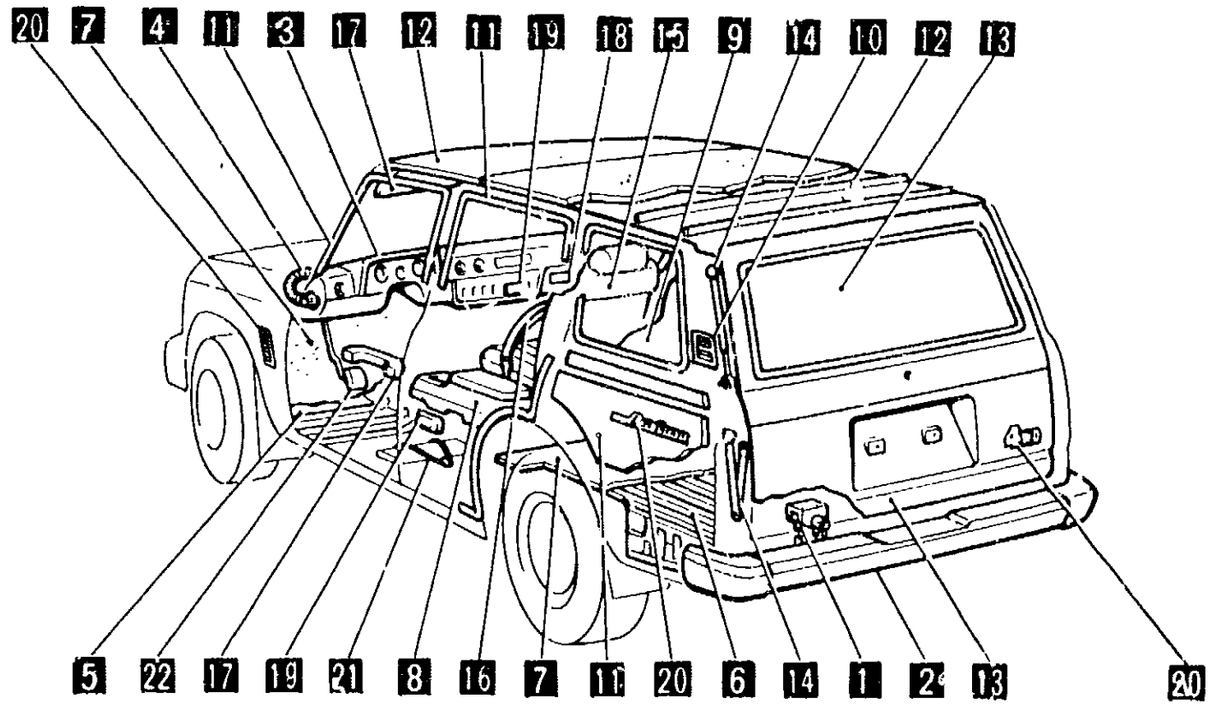

3-B4 (58-55) 8

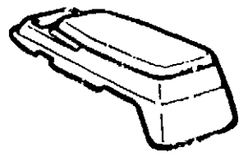

Console Box

3-J4 (61-52) 9

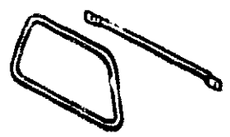

Side Window

3-A5 (61-55) 10

Rear & Roof Ventilator

3-B5 (64-51) 11

Inside Trim Board

3-L8 (74-56) 19

Ash Receptacle

3-K8 (74-55) 18

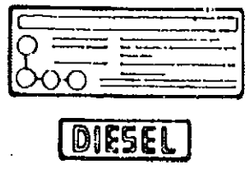

Caution Plate

3-G8 (74-51) 17

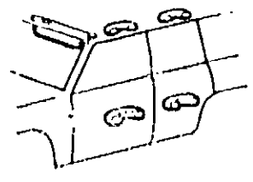

Armrest & Visor

3-E8 (71-52) 16

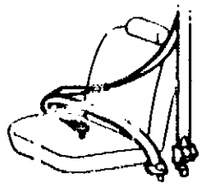

Seat Belt

3-I7 (71-51) 15

Seat & Seat Track

3-D7 (67-62) 14

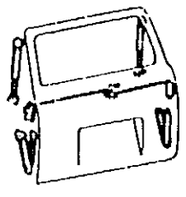

Back Door Lock & Hinge

3 A7 (67-61) 13

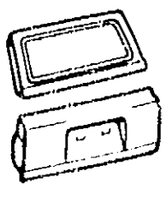

Back Door Panel & Glass

3-G5 (64-52) 12

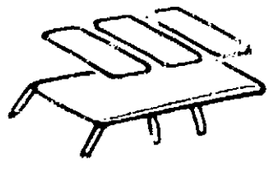

Roof Headlining & Pad

MB C155

ILLUSTRATED INDEX

J16

4-A1 (81-01) 1

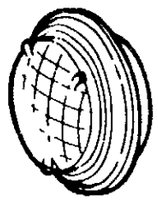

Headlamp

4-C1 (81-03) 2

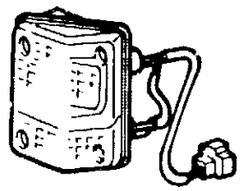

Front Turn Signal Lamp

4-E1 (81-05) 3

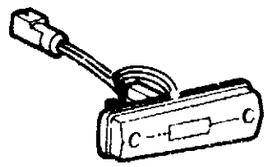

Front Marker Lamp

4-F1 (81-11) 4

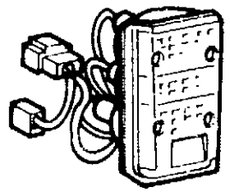

Rear Combination Lamp

4-H1 (81-13) 5

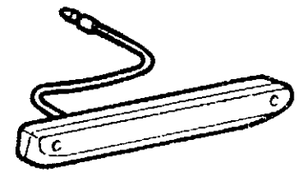

Licence Plate Lamp

4-I1 (81-14) 6

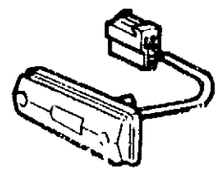

Rear Side Marker Lamp

4-J1 (81-21) 7

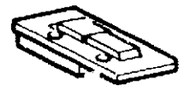

Interior Lamp

ELECTRICAL GROUP (1/2)

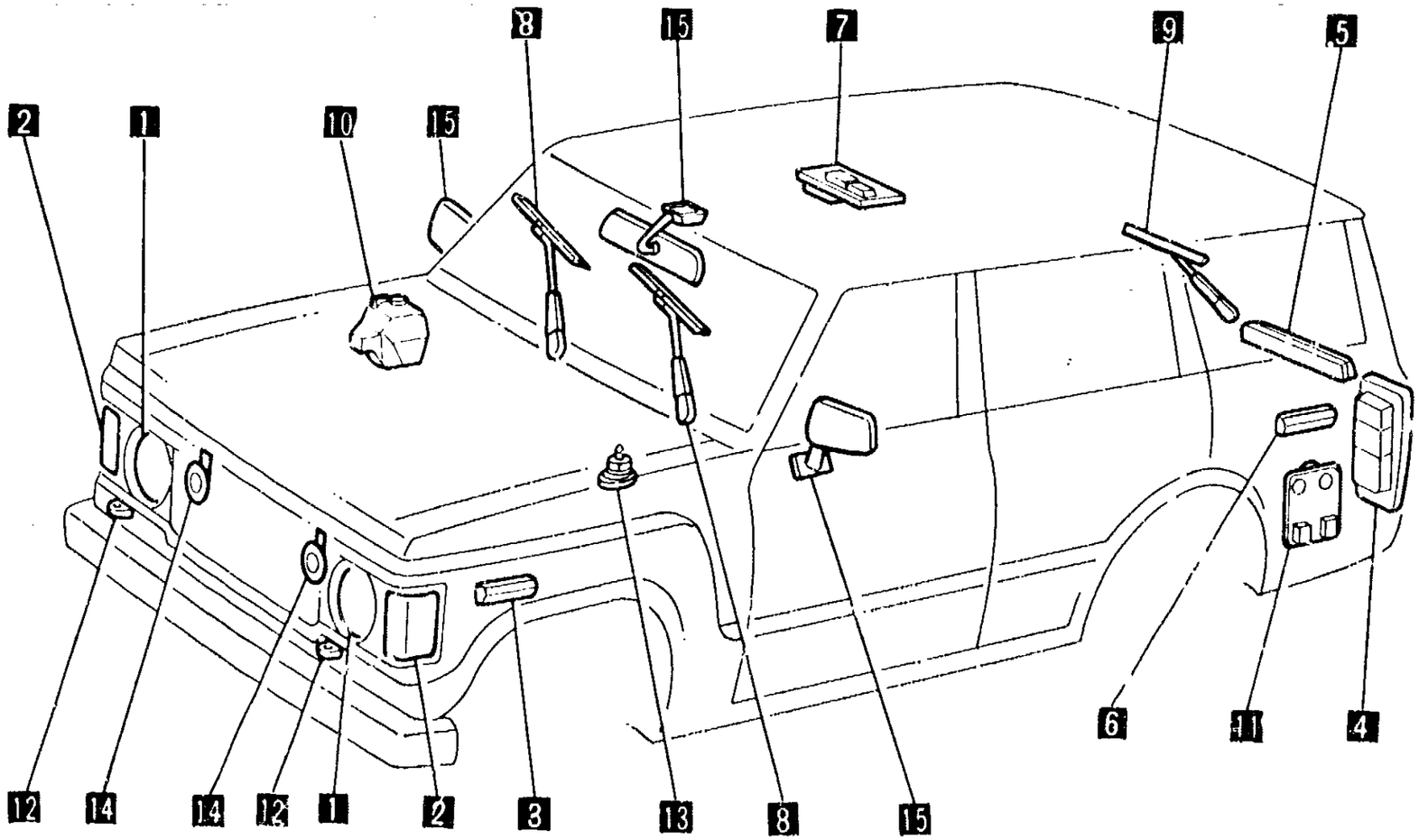

4-J3 (85-01) 8

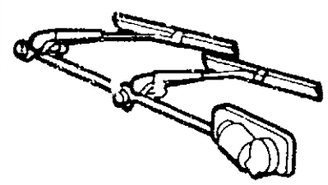

Windshield Wiper

4-L3 (85-02) 9

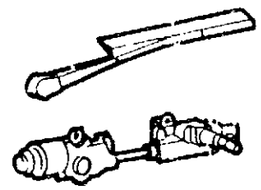

Rear Wiper

4-A4 (85-03) 10

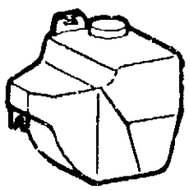

Windshield Washer

4-D4 (85-04) 11

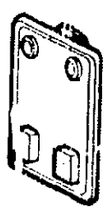

Rear Washer

4-A5 (87-01) 15

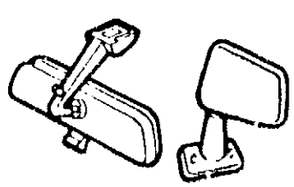

Mirror

4-M4 (86-11) 14

Horn

4-L4 (86-04) 13

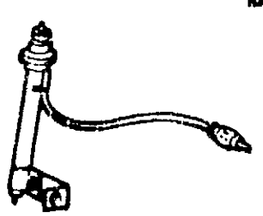

Antenna

4-F4 (85-05) 12

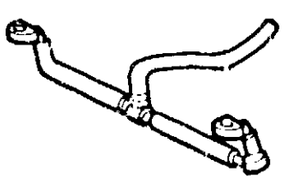

Headlamp Cleaner

ME 9644

ILLUSTRATED INDEX

4-L1 (82-01) 1

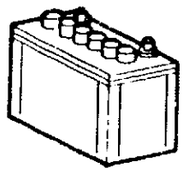

Battery & Cable

4-A2 (82-02) 2

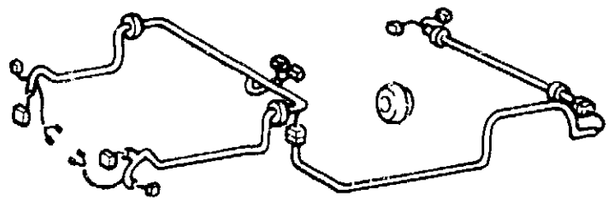

Wiring & Clamp

4-H2 (83-01) 3

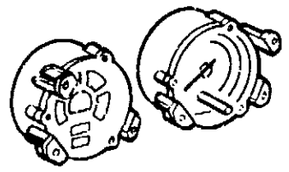

Meter

4-K2 (83-02) 4

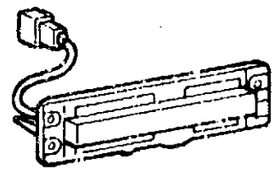

Indicator

4-L2 (84-01) 5

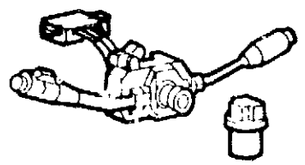

Switch & Relay

4-H3 (84-06) 6

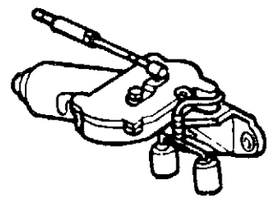

EDIC

ELECTRICAL GROUP (2/2)

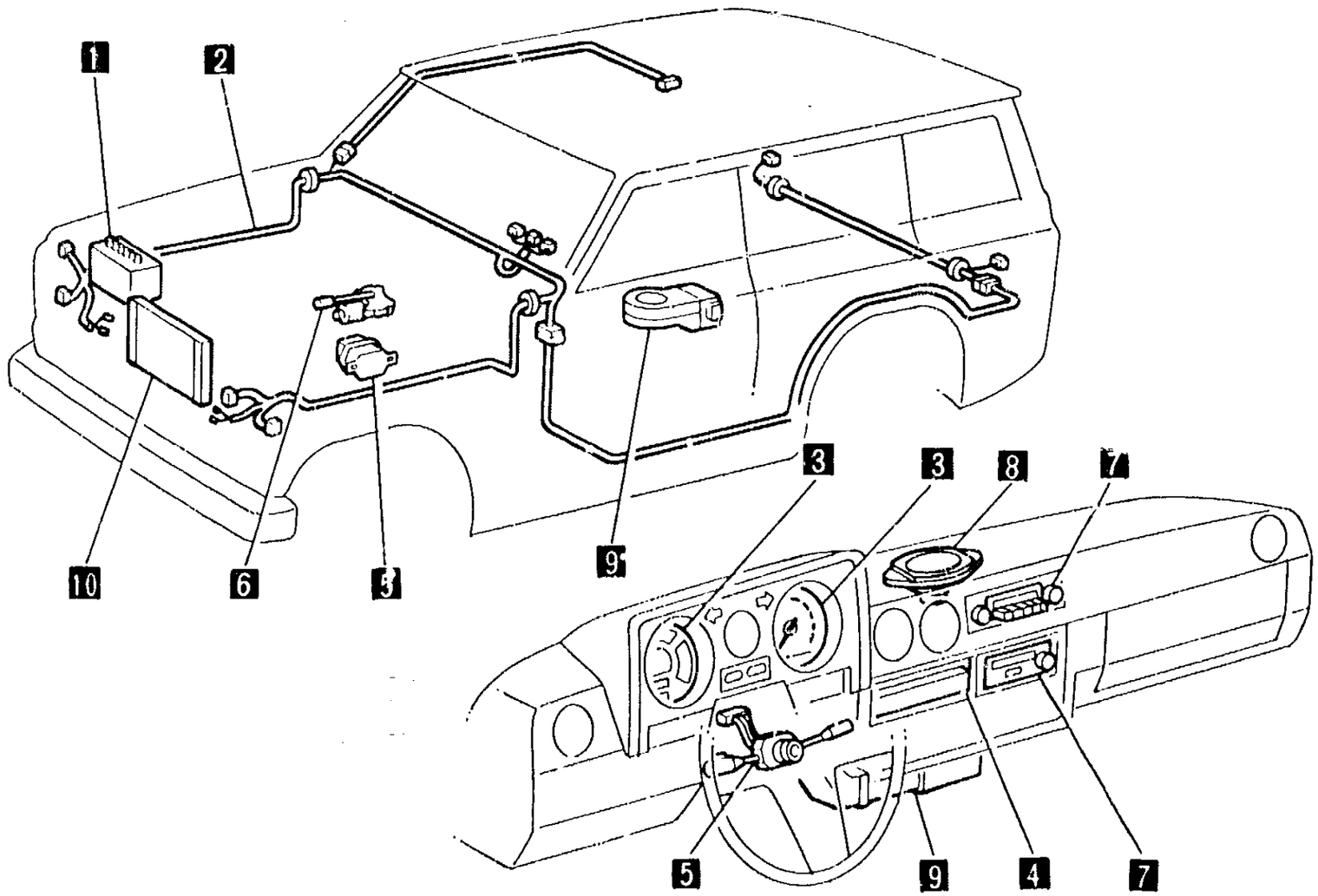

4-H4 (86-01) 7

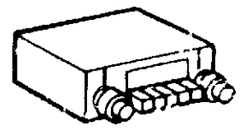

Radio & Tape Player

4-K4 (86-02) 8

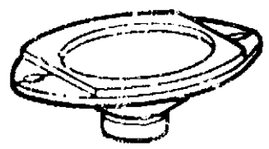

Speaker

10

4-E6 (87-18) Piping

4-I6 Compressor (87-19)

4-C6 (87-17) Vacuum

4-B5 (87-11) Set

4-G5 (87-14) Unit

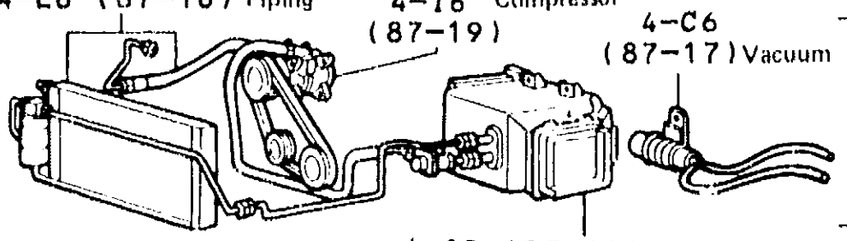

9

4-K5 (87-16) Piping

4-I5 (87-15) Duct

4-B5 (87-11) Set

4-D5 (87-12) Unit

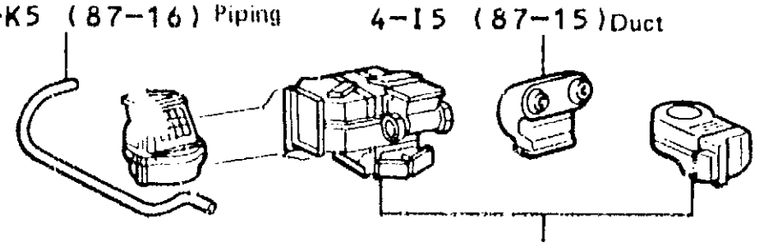

ME 9645-A

FIGURE NUMBER INDEX

LOCATION	FIG.No.	SUMMARY
		TOOL GROUP
1-A1	09-01	STANDARD TOOL
		ENGINE GROUP
1-D1	11-01	PARTIAL ENGINE ASSEMBLY
1-E1	11-02	SHORT BLOCK ASSEMBLY
1-F1	11-03	ENGINE OVERHAUL GASKET KIT
1-G1	11-04	CYLINDER HEAD
1-K1	11-05	CYLINDER BLOCK
1-C2	11-06	TIMING GEAR COVER & REAR END PLATE
1-G2	11-07	MOUNTING
1-K2	12-01	VENTILATION HOSE
1-A3	13-01	CRANKSHAFT & PISTON
1-G3	13-02	CAMSHAFT & VALVE
1-L3	15-01	OIL PUMP
1-C4	15-02	OIL FILTER
1-F4	15-03	OIL COOLER
1-J4	16-01	WATER PUMP
1-L4	16-03	RADIATOR & WATER OUTLET
1-G5	17-01	MANIFOLD
1-L5	17-02	EXHAUST PIPE
1-D6	17-03	AIR CLEANER
1-H6	17-05	AIR PUMP
1-I6	17-06	MANIFOLD AIR INJECTION SYSTEM
1-K6	17-08	VACUUM PIPING
1-B7	17-09	CAUTION PLATE & NAME PLATE
1-C7	19-01	IGNITION COIL & SPARK PLUG
1-F7	19-02	DISTRIBUTOR
1-I7	19-03	ALTERNATOR
1-B8	19-04	STARTER
1-G8	19-05	VACUUM PUMP
		FUEL GROUP
1-I8	21-01	FUEL PIPE & CLAMP
1-J8	21-02	CARBURETOR ASSEMBLY
1-K8	21-03	CARBURETOR
1-C9	22-01	INJECTION NOZZLE
1-F9	22-02	INJECTION PUMP ASSEMBLY
1-H9	22-03	INJECTION PUMP BODY
1-K9	22-04	PNEUMATIC GOVERNOR
1-B10	22-05	MECHANICAL GOVERNOR
1-G10	22-06	FUEL FEED PUMP
1-I10	22-07	AUTOMATIC TIMER
1-K10	23-01	FUEL PUMP
1-L10	23-02	FUEL FILTER
1-B11	25-01	EXHAUST GAS RECIRCULATION SYSTEM
1-D11	26-06	VENTURI
		POWER TRAIN·CHASSIS GROUP
2-A1	31-01	CLUTCH & RELEASE FORK
2-D1	31-02	CLUTCH PEDAL & FLEXIBLE HOSE
2-F1	31-03	CLUTCH MASTER CYLINDER
2-J1	31-04	CLUTCH BOOSTER
2-M1	31-05	CLUTCH RELEASE CYLINDER
2-C2	33-01	TRANSAXLE OR TRANSMISSION ASSY & GASKET KIT (MTM)
2-E2	33-02	CLUTCH HOUSING & TRANSMISSION CASE (MTM)
2-H2	33-04	SPEEDOMETER DRIVEN GEAR (MTM)
2-I2	33-05	TRANSMISSION GEAR (MTM)
2-A3	33-07	GEAR SHIFT FORK & LEVER SHAFT (MTM)
2-E3	33-12	SHIFT LEVER & RETAINER
2-J3	35-01	TRANSAXLE OR TRANSMISSION ASSY & GASKET KIT (MTM)
2-K3	35-02	TORQUE CONVERTER, FRONT OIL PUMP & CHN (ATM)
2-M3	35-03	TRANSMISSION CASE & OIL PAN (ATM)
2-B4	35-05	SPEEDOMETER DRIVEN GEAR (ATM)
2-C4	35-06	OVERDRIVE GEAR (ATM)
2-F4	35-07	BRAKE BAND & MULTIPLE DISC CLUTCH (ATM)
2-H4	35-08	CENTER SUPPORT & PLANETARY SUN GEAR (ATM)
2-J4	35-09	BRAKE NO. 3, 1ST & REVERSE BRAKE (ATM)
2-K4	35-10	PLANETARY GEAR, REVERSE PISTON & COUNTER GEAR (ATM)
2-M4	35-11	REAR OIL PUMP & GOVERNOR (ATM)
2-B5	35-12	VALVE BODY & OIL STRAINER (ATM)
2-K5	35-13	THROTTLE LINK & VALVE LEVER (ATM)
2-M5	35-14	OIL COOLER & TUBE (ATM)
2-B6	36-02	POWER TAKE-OFF CASE & GEAR
2-E6	36-08	TRANSFER ASSY & GASKET KIT
2-F6	36-09	TRANSFER CASE & EXTENSION HOUSING
2-I6	36-10	TRANSFER GEAR
2-M6	36-11	TRANSFER LEVER & SHIFT ROD
2-D7	36-12	DIAPHRAGM CYLINDER
2-E7	36-16	VACUUM SHIFT VALVE & TUBE
2-G7	37-01	PROPELLER SHAFT & UNIVERSAL JOINT
2-K7	38-01	WINCH KIT
2-L7	38-02	WINCH
2-G8	41-01	REAR AXLE HOUSING & DIFFERENTIAL
2-D9	41-02	REAR AXLE SHAFT & HUB
2-G9	41-03	DISC WHEEL & WHEEL CAP
2-I9	42-01	DIFFERENTIAL LOCK CONTROL
2-L9	43-01	FRONT AXLE HOUSING & DIFFERENTIAL
2-G10	43-02	DRIVE SHAFT
2-H10	43-03	FRONT AXLE HUB
2-J10	45-01	STEERING COLUMN & GEAR HOUSING
2-G11	45-02	VANE PUMP & RESERVOIR
2-M11	45-03	OIL COOLER & TUBE
2-D12	45-04	STEERING WHEEL
2-G12	45-05	STEERING LINK
2-I12	46-01	PARKING BRAKE & CABLE
2-K12	47-01	BRAKE PEDAL & BRACKET
2-M12	47-02	BRAKE MASTER CYLINDER
2-C13	47-03	BRAKE BOOSTER
2-I13	47-05	FRONT DISC BRAKE CALIPER & DUST COVER
2-K13	47-06	REAR BACKING PLATE & WHEEL CYLINDER
2-A14	47-08	BRAKE TUBE & CLAMP
2-E14	48-02	FRONT AXLE ARM & STEERING KNUCKLE
2-G14	48-03	FRONT SPRING & SHOCK ABSORBER
2-M14	48-04	REAR SPRING & SHOCK ABSORBER

FIGURE NUMBER INDEX

M16

LOCATION	FIG.No.	SUMMARY
		BODY GROUP
3-A1	51-51	FRAME
3-D1	51-52	SUSPENSION CROSSMEMBER & UNDER COVER
3-F1	51-53	SPARE WHEEL CARRIER
3-G1	52-51	CAB MOUNTING & BODY MOUNTING
3-J1	52-52	FRONT BUMPER & BUMPER STAY
3-L1	52-53	REAR BUMPER & BUMPER STAY
3-M1	53-51	RADIATOR GRILLE
3-A2	53-53	HOOD & FRONT FENDER
3-C2	53-54	HOOD LOCK & HINGE
3-D2	53-55	FRONT FENDER APRON & DASH PANEL
3-G2	55-51	INSTRUMENT PANEL & GLOVE COMPARTMENT
3-K2	55-52	FRONT VENTILATOR
3-L2	55-53	COWL PANEL & WINDSHIELD GLASS
3-A3	57-51	FLOOR MEMBER
3-C3	58-51	FRONT FLOOR PANEL & FRONT FLOOR MEMBER
3-H3	58-52	REAR FLOOR PANEL & REAR FLOOR MEMBER
3-K3	58-53	FLOOR INSULATOR
3-L3	58-54	FLOOR MAT & SILENCER PAD
3-B4	58-55	CONSOLE BOX & BRACKET
3-F4	61-51	SIDE MEMBER
3-J4	61-52	SIDE WINDOW
3-K4	61-53	ROOF PANEL & BACK PANEL
3-A5	61-55	REAR VENTILATOR & ROOF VENTILATOR
3-B5	64-51	INSIDE TRIM BOARD
3-G5	64-52	ROOF HEADLINING & SILENCER PAD
3-J5	67-51	FRONT DOOR PANEL & GLASS
3-C6	67-53	FRONT DOOR LOCK & HANDLE
3-E6	67-54	FRONT DOOR WINDOW REGULATOR & HINGE
3-G6	67-55	REAR DOOR PANEL & GLASS
3-J6	67-56	REAR DOOR LOCK & HANDLE
3-L6	67-57	REAR DOOR WINDOW REGULATOR & HINGE
3-A7	67-61	BACK DOOR PANEL & GLASS
3-D7	67-62	BACK DOOR LOCK & HINGE
3-G7	67-65	LOCK CYLINDER SET
3-I7	71-51	SEAT & SEAT TRACK
3-E8	71-52	SEAT BELT
3-G8	74-51	ARMREST & VISOR
3-J8	74-54	BATTERY CARRIER
3-K8	74-55	CAUTION PLATE
3-L8	74-56	ASH RECEPTACLE
3-M8	75-51	EMBLEM & NAME PLATE
3-B9	75-52	MOULDING
3-E9	75-54	TOOL BOX & LICENSE PLATE BRACKET
3-F9	77-51	FUEL TANK & TUBE
3-C10	78-51	ACCELERATOR LINK
		ELECTRICAL GROUP
4-A1	81-01	HEADLAMP
4-C1	81-03	FRONT TURN SIGNAL LAMP
4-E1	81-05	FRONT MARKER LAMP
4-F1	81-11	REAR COMBINATION LAMP
4-H1	81-13	REAR LICENSE PLATE LAMP
4-I1	81-14	REAR SIDE MARKER LAMP
4-J1	81-21	INTERIOR LAMP
4-L1	82-01	BATTERY & BATTERY CABLE
4-A2	82-02	WIRING & CLAMP
4-H2	83-01	METER
4-K2	83-02	INDICATOR
4-L2	84-01	SWITCH & RELAY
4-H3	84-06	ELECTRONIC DIESEL INJECTION CONTROL SYSTEM
4-J3	85-01	WINDSHIELD WIPER
4-L3	85-02	REAR WIPER
4-A4	85-03	WINDSHIELD WASHER
4-D4	85-04	REAR WASHER
4-F4	85-05	HEADLAMP CLEANER
4-H4	86-01	RADIO & TAPE PLAYER
4-K4	86-02	SPEAKER
4-L4	86-04	ANTENNA
4-M4	86-11	HORN
4-A5	87-01	MIRROR
4-B5	87-11	HEATING & AIR CONDITIONING - SET
4-D5	87-12	HEATING & AIR CONDITIONING - HEATER UNIT & BLOWER
4-G5	87-14	HEATING & AIR CONDITIONING - COOLER UNIT
4-I5	87-15	HEATING & AIR CONDITIONING - CONTROL & AIR DUCT
4-K5	87-16	HEATING & AIR CONDITIONING - WATER PIPING
4-C6	87-17	HEATING & AIR CONDITIONING - VACUUM PIPING
4-E6	87-18	HEATING & AIR CONDITIONING - COOLER PIPING
4-I6	87-19	HEATING & AIR CONDITIONING - COMPRESSOR

(8008-8603)

※1(-8308)
※2(-8510)

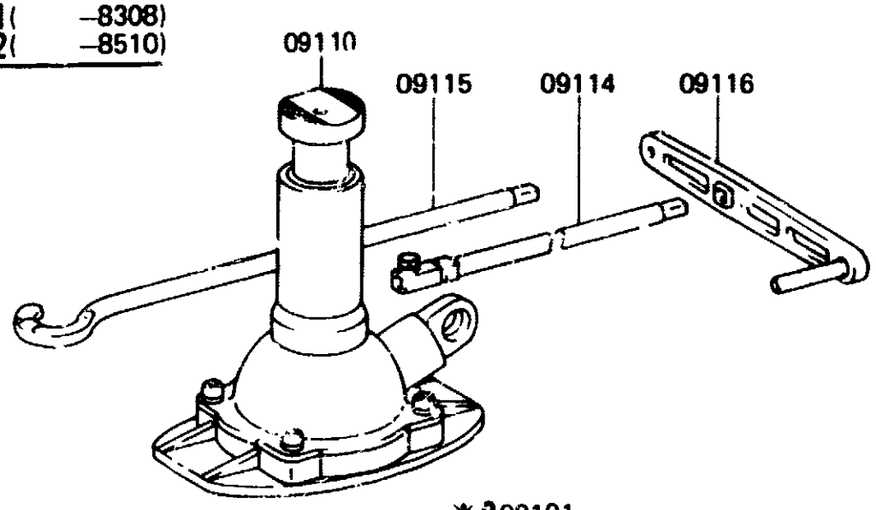

※209101

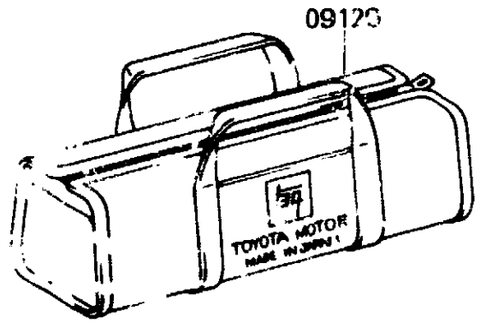

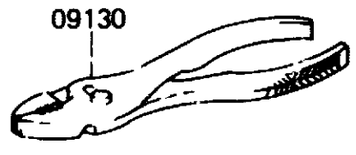

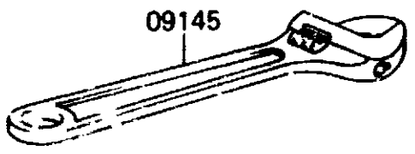

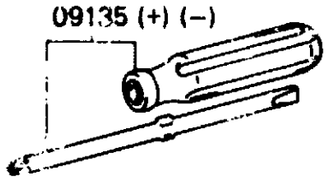

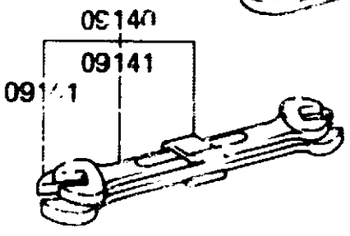

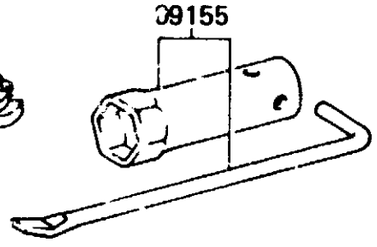

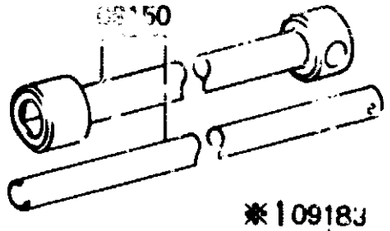

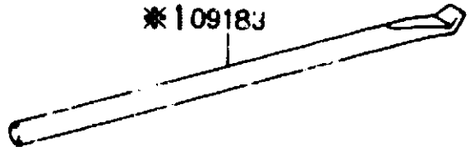

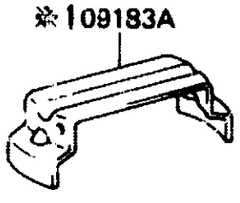

MT 0457-I

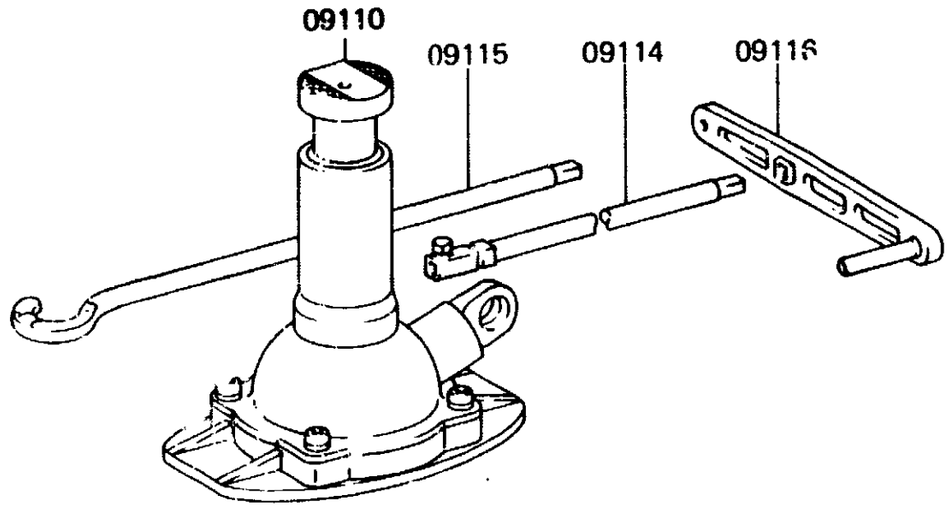

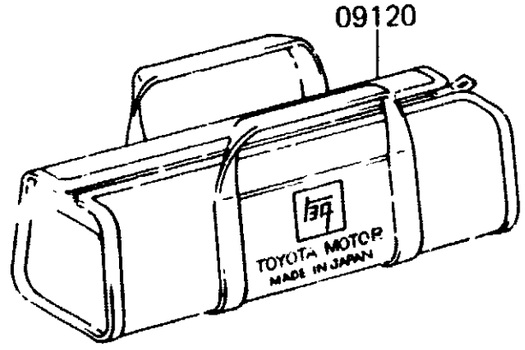

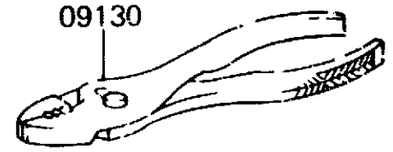

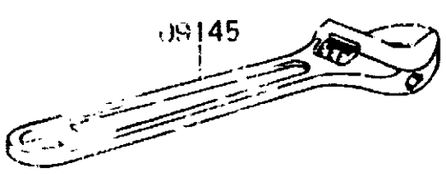

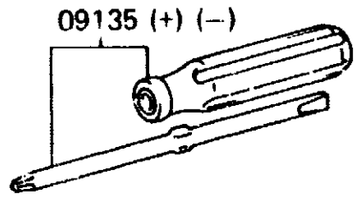

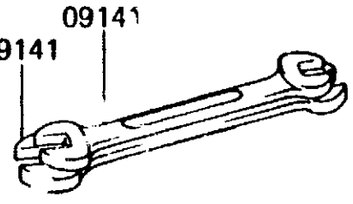

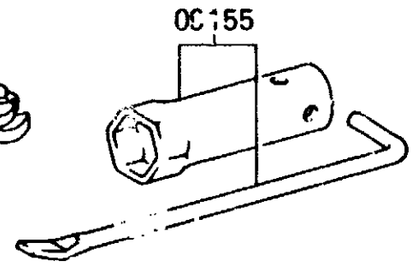

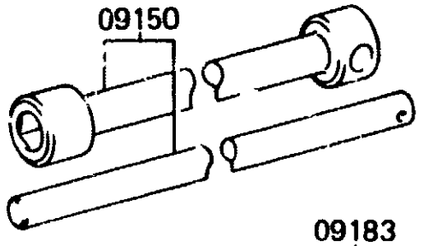

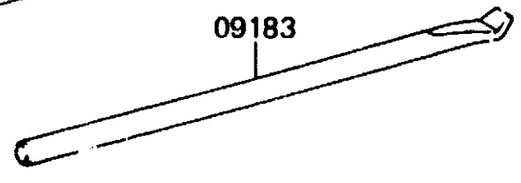

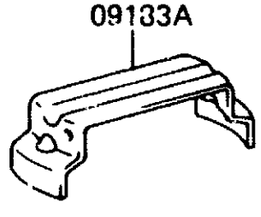

MT 0949-A

	PROD.DATE	MODELS	DESCRIPTION	R/P	PART NUMBER	QTY	REV.REF.CODE FROM	REV.REF.CODE UP TO
	FIG.	09-01 STANDARD TOOL						
		09101 TOOL SET,	STANDARD W/O JACK					
	8008-8205	BJ60			# 09101-60122- (09101-60240-)	1	455	
	8205-8210	BJ60			09101-60240-	1		466
	8210-8308	BJ60	W/FREE WHEEL HUB			1	467	
	8210-8510	BJ60			09101-60230-	1	467	566
	8008-8205	FJ60			# 09101-60112- (09101-60241-)	1	455	
	8205-8210	FJ60			09101-60241-	1		466
	8210-8308	FJ60	W/FREE WHEEL HUB			1	467	
C	8210-8510	FJ60			09101-60231-	1	467	566
		09110 JACK ASSY						
	8008-8308	BJ60,FJ60			# 09110-60030- (09110-60040-)	1	455	
	8308-8411	BJ60,FJ60			# 09110-60040- (09111-60050-) (09113-60040-)	1		514
C	8411-8608	BJ60,HJ60			09111-60050-	1	515	600
	8411-8504	FJ60			# 09110-60040- (09111-60050-) (09113-60040-)	1	515	554
C	8504-8608	FJ60			09111-60050-	1	555	600
C	8608-	HJ60,FJ60				1	601	
		09114 EXTENSION SUB-ASSY, JACK HANDLE						
C	8008-8604	BJ60,FJ60			09114-60030-	1	455	572
C	8604-8608	FJ60			09114-60050-	1	573	600
C	8510-8608	HJ60				1	567	600
C	8608-	HJ60,FJ60				1	601	
		09115 ROD SUB-ASSY, JACK HANDLE						
C	8008-8604	BJ60,FJ60			09115-35040-	1	455	572
C	8604-8608	FJ60			09115-60030-	1	573	600
C	8510-8608	HJ60				1	567	600

	PROD.DATE	MODELS	DESCRIPTION	R/P	PART NUMBER	QTY	REV.REF.CODE FROM	REV.REF.CODE UP TO
		09115 ROD SUB-ASSY, JACK HANDLE CONTINUED						
C	8608-	HJ60,FJ60			09115-60030-	1	601	
		09116 LEVER, JACK HANDLE						
	8008-	BJ60,HJ60,FJ60			09116-35041-	1	455	
		09120 BAG, TOOL						
C	8008-8608	BJ60,FJ60			09120-60050-	1	455	600
C	3510-8608	HJ60			09120-60070-	1	567	600
C	8608-	HJ60,FJ60				1	601	
		09130 PLIERS						
	8008-8205	BJ60,FJ60			# 09130-00030- (09130-00022-)	1	455	
	8205-	BJ60,HJ60,FJ60			99913-12000-	1		
		09135 DRIVER, SCREW						
	8008-	BJ60,HJ60,FJ60			99915-10700-	1	455	
		09140 SPANNER SET						
C	8008-8608	BJ60,HJ60,FJ60			09140-27010-	1	455	594
		09141 SPANNER						
	8008-	BJ60,HJ60,FJ60	10X12		99914-11012-	1	455	
	8008-	BJ60,HJ60,FJ60	14X17		99914-11417-	1	455	
		09145 WRENCH, MONKEY						
C	8008-8608	BJ60,HJ60,FJ60			# 99911-10250- (99911-20250-)	1	455	600
C	8608-	HJ60,FJ60			99911-20250-	1	601	
		09150 WRENCH, HUB NUT BOX						
	8008-	BJ60,HJ60,FJ60			09150-60010-	1	455	
		09155 WRENCH, SPARK PLUG						
	8008-	FJ60			09155-44010-	1	455	

FIG.09-01 **GENUINE TOYOTA PARTS** 1-C1 **GENUINE TOYOTA PARTS**

PROD.DATE	MODELS	DESCRIPTION	R/P	PART NUMBER	QTY	REV.REF.CODE FROM	REV.REF.CODE UP TO
	09183 WRENCH, WHEEL CAP						
8008-8210	BJ60,FJ60			09183-00030-	1	455	466
8210-	BJ60,HJ60,FJ60	W/FREE WHEEL HUB			1	467	
	09183A REPLACER, WHEEL CAP						
8008-8210	BJ60,FJ60			09183-60010-	1	455	466
8210-	BJ60,HJ60,FJ60	W/FREE WHEEL HUB			1	467	

PROD.DATE	MODELS	DESCRIPTION	R/P	PART NUMBER	QTY	REV.REF.CODE FROM	REV.REF.CODE UP TO

GENUINE TOYOTA PARTS

(8008-)

2F

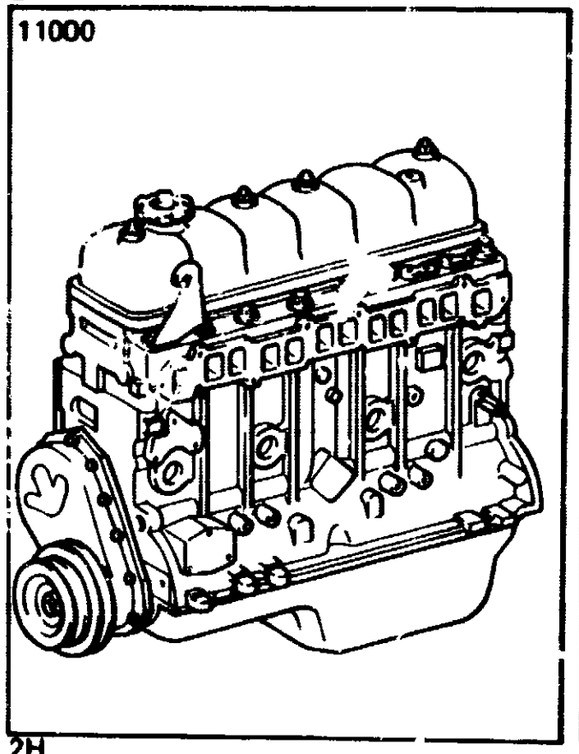

3B

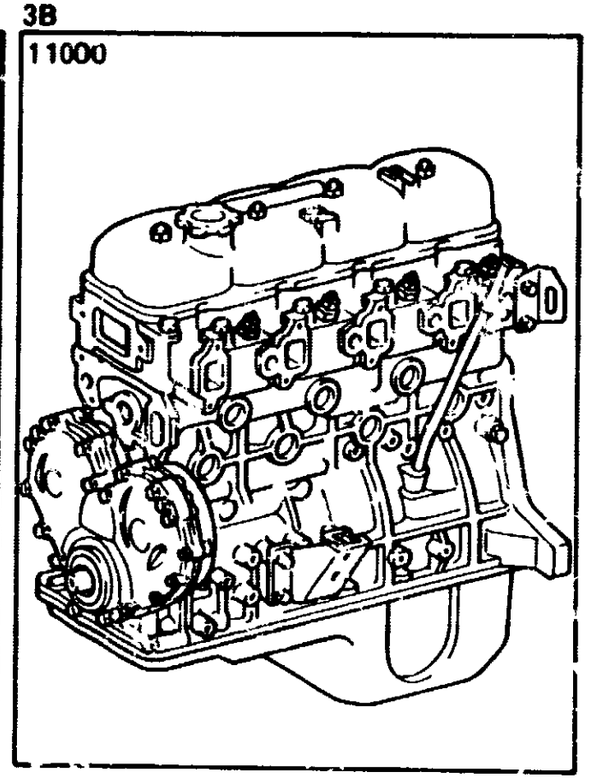

2H

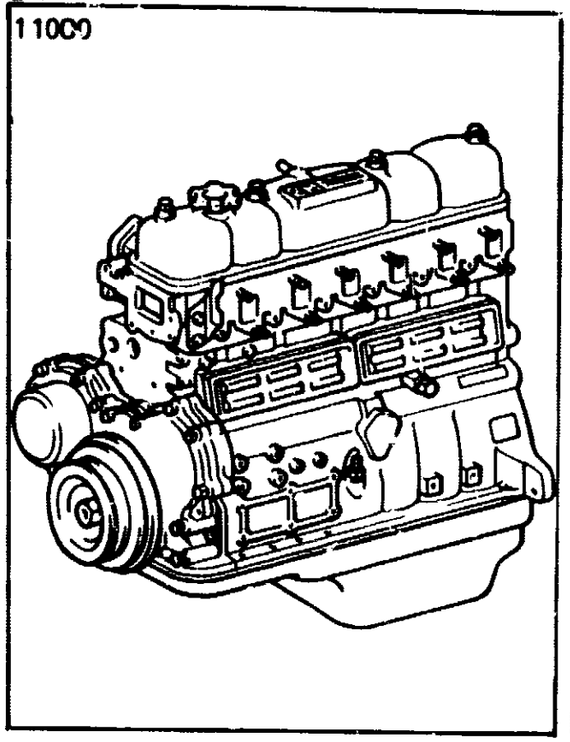

MA 4771-C

	PROD.DATE	MODELS	DESCRIPTION	R/P	PART NUMBER	QTY	REV.REF.CODE FROM	REV.REF.CODE UP TO
	FIG.	11-01 PARTIAL ENGINE ASSEMBLY						
		11000 ENGINE ASSY, PARTIAL						
	8008-8110	2F..FJ60..CND		*	19000-61200-	1	455	458
	8008-8510	2F..FJ60..USA		*	19000-61210-	1	455	566
C	8510-	2H..HJ60			19000-63180-	1	567	
	8008-8201	3B..BJ60		*	19000-58010-	1	455	476
	8201-8209	3B..BJ60		#	19000-58011- (19000-58012-)	1	477	
	8209-8408	3B..BJ60			19000-58012-	1		
	8411-8501	3B..BJ60		#	19000-58380- (19000-58340-)	1	515	
	8501-8510	3B..BJ60			19000-58340-	1		566

MR4-13-0194

GENUINE TOYOTA PARTS

FIG. 11-02 SHORT BLOCK ASSEMBLY

(8008-)

2F(-8309)

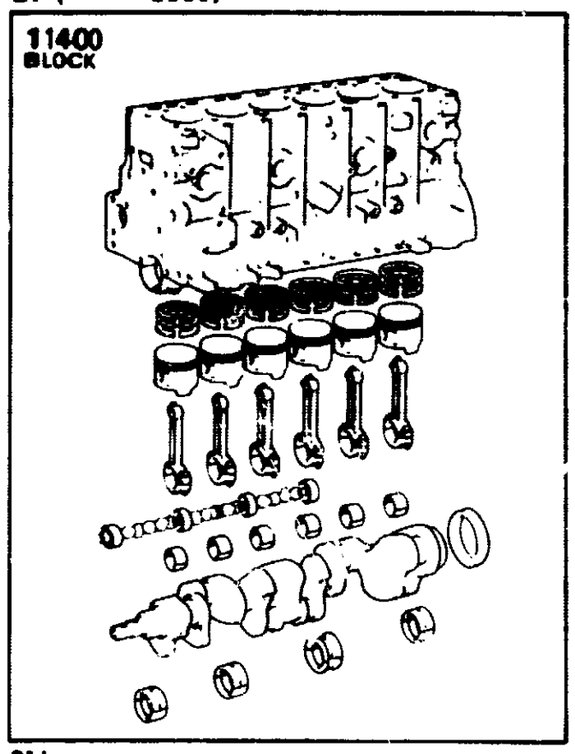

3B

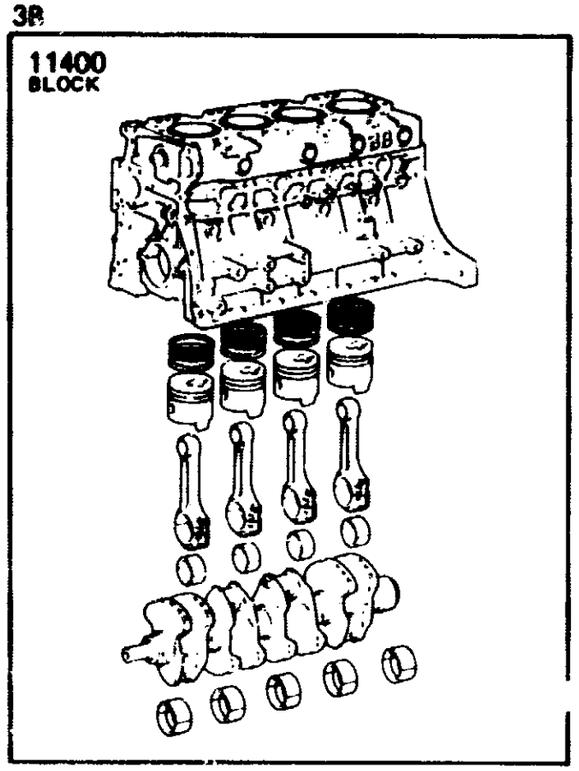

2H

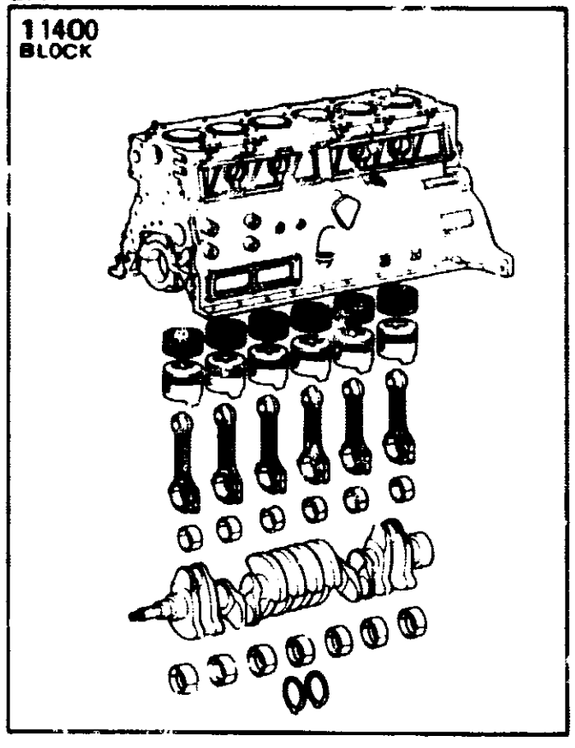

MA 4774C

	PROD. DATE	MODELS	DESCRIPTION	R/P	PART NUMBER	QTY	REV. REF. CODE FROM	REV. REF. CODE UP TO
		11400 BLOCK ASSY, SHORT						
	8008-8510	2F..FJ60		*	11400-61011-	1	455	566
C	8510-	2H..HJ60			11400-60[illegible]0-	1	567	
	8008-8201	3B..BJ60		*	11400-58010-	1	455	476
	8201-8209	3B..BJ60		#	11400-58011- (11400-58012-	1	477	
	8209-8408	3B..BJ60		#	11400-58012- (11400-58013- (91611-60820-	1		
	8408-8510	3B..BJ60			11400-58040-	1		566

GENUINE TOYOTA PARTS

(8008-)

2F(-8309)

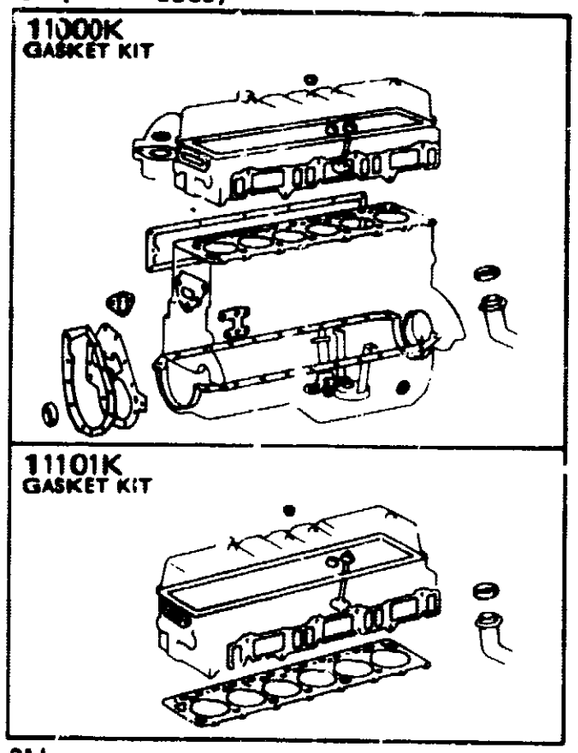

3B

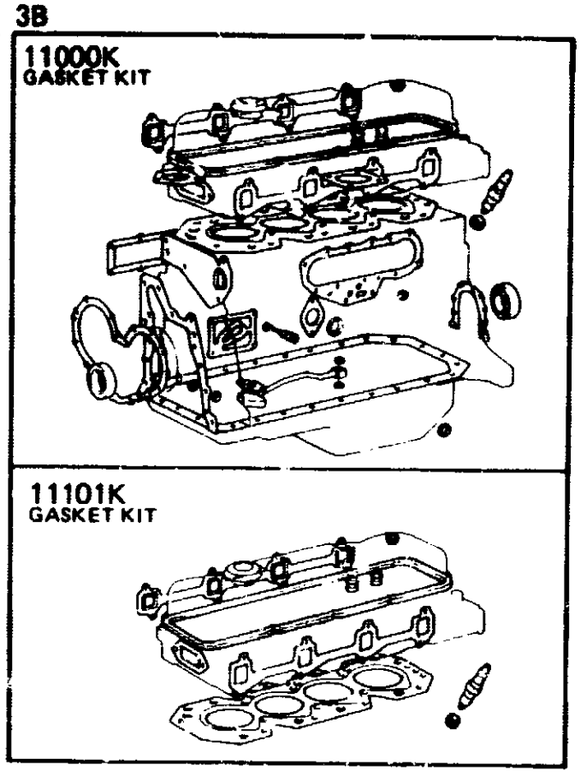

2H

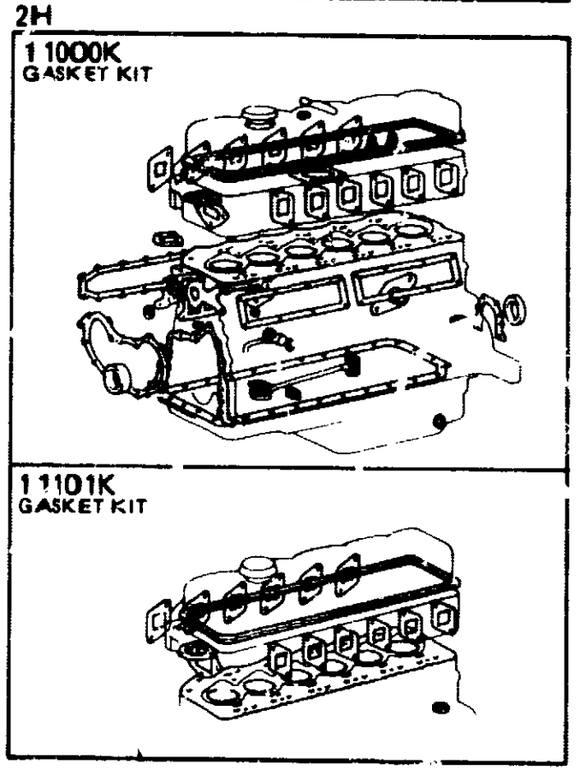

MA 4777-D

	PROD.DATE	MODELS	DESCRIPTION	R/P	PART NUMBER	QTY	REV.REF.CODE FROM	REV.REF.CODE UP TO
	FIG.	11-03 ENGINE OVERHAUL GASKET KIT						
		11000K GASKET KIT, ENGINE OVERHAUL						
	8008-8410	2F..FJ60			04111-6104.-	1	455	
	8410-8412	2F..FJ60			04111-61041-	1		
	8412-8510	2F..FJ60			04111-61060-	1		566
C	8510-	2H..HJ60			04111-68020-	1	567	
	8008-8105	3B..BJ60		#	04111-58011- (04111-58012-)	1	455	
	8105-8308	3B..BJ60		#	04111-58012- (04111-58013-)	1		
	8308-8408	3B..BJ60			04111-58013-	1		
	8408-8510	3B..BJ60			04111-58050-	1		566
		11101K GASKET KIT, ENGINE VALVE GRIND						
	8008-8510	2F..FJ60			04112-61040-	1	455	566
C	8510-	2H..HJ60			04112-68020-	1	567	
	8008-8308	3B..BJ60		#	04112-58010- (04112-58011-)	1	455	
	8308-8408	3B..BJ60			04112-58011-	1		
	8408-8510	3B..BJ60			04112-58040-	1		566

FIG.11-04 CYLINDER HEAD

MR4-11-0364

(8008-)2F

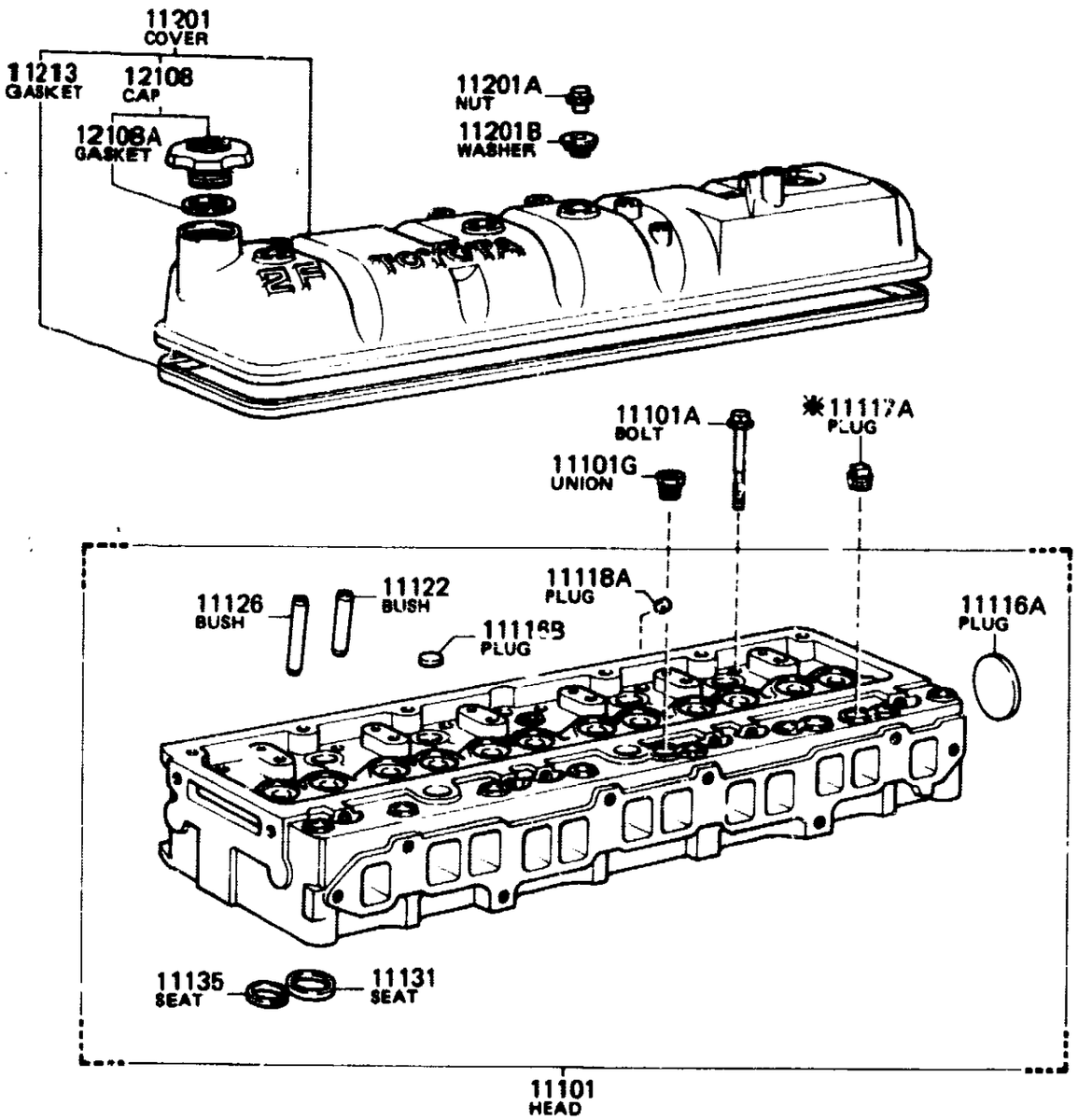

(8008-8510)3B

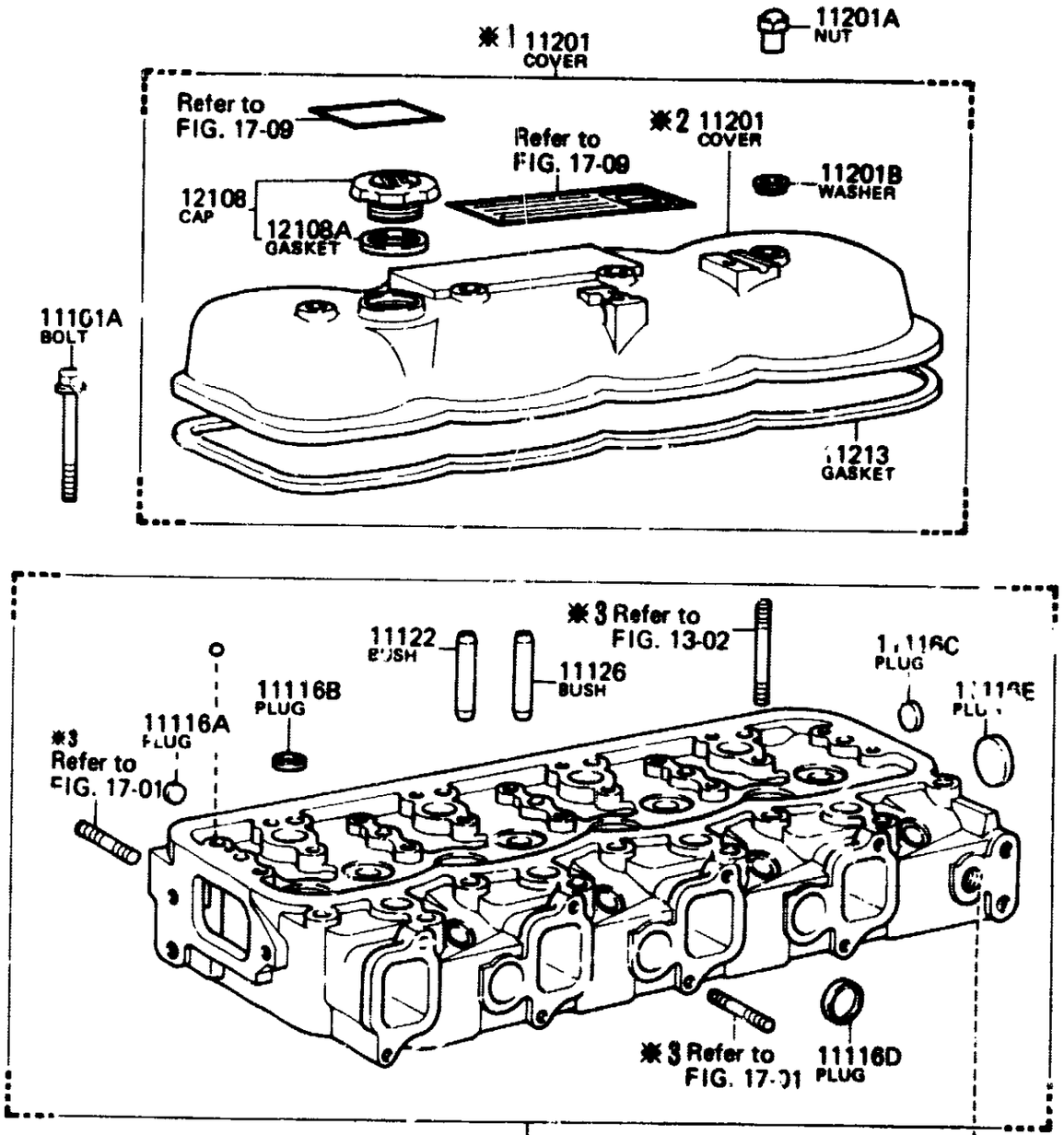

FIG. 11-04 CYLINDER HEAD

(8510-)2H

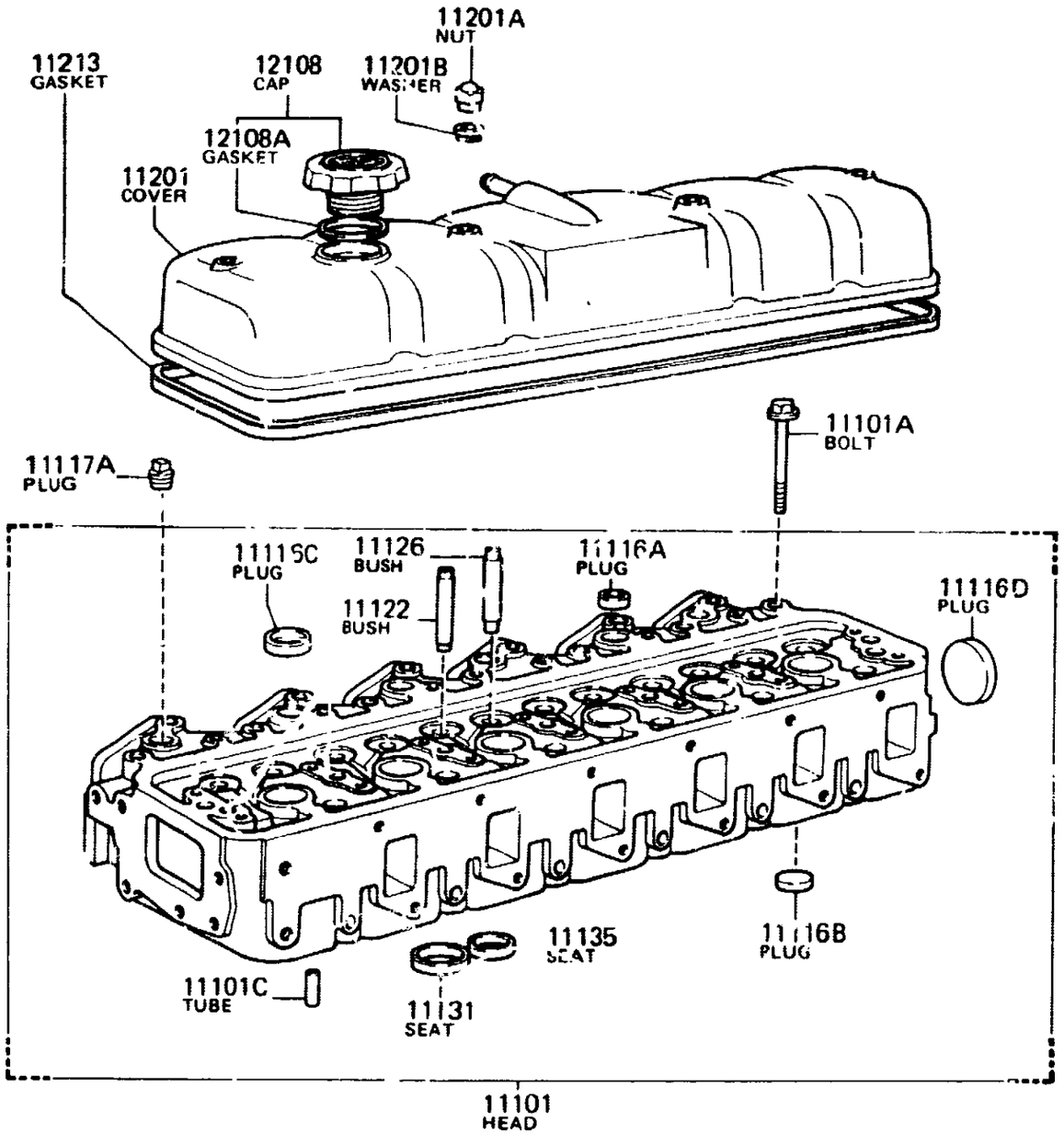

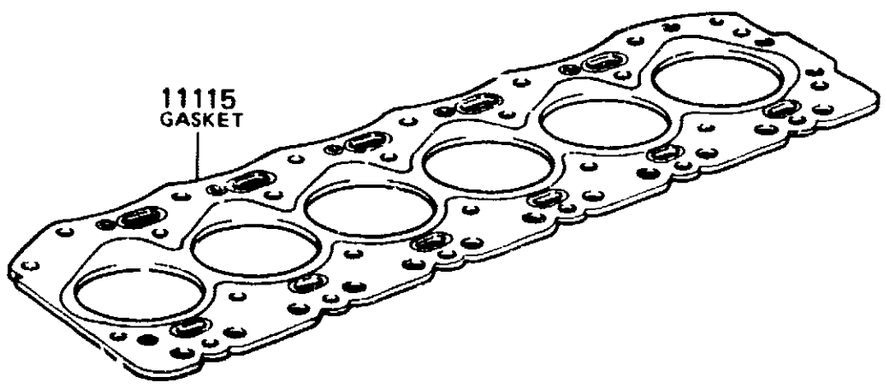

MA 8733

* ○—○ P X ○—○ =
Outside diameter—Pitch × Bolt length—Thread length

GENUINE TOYOTA PARTS

PROD.DATE	MODELS	DESCRIPTION	R/P	PART NUMBER	QTY	REV.REF.CODE FROM	REV.REF.CODE UP TO
FIG.	11-04 CYLINDER HEAD						
	11101 HEAD SUB-ASSY, CYLINDER						
8008-8110	2F••FJ60••CND			11101-61021-	1	455	458
8008-	2F••FJ60••USA			11101-61040-	1	455	
8510-	2H••HJ60			11101-68011-	1	567	
8008-8110	3B••BJ60		#	11101-59095- (11101-59096-)	1	455	458
8110-8401	3B••BJ60		*	11101-59096-	1	459	
8401-8406	3B••BJ60		#	11101-58012- (11101-58013-)	1		
8406-8510	3B••BJ60			11101-58013-	1		566
	11101A BOLT (FOR CYLINDER HEAD SET)						
8008-	2F••FJ60	*13-1.75PX 120.5-27		90910-02050-	15	455	
8510-	2H••HJ60	*12-1.25PX 119-25		90910-02070-	26	567	
8008-8510	3B••BJ60	*12-1.25PX 119-25		90910-02046-	18	455	566
	11101C TUBE (FOR CYLINDER HEAD)						
8510-	2H••HJ60			90440-15141-	6	567	
	11101G UNION (FOR CYLINDER HEAD)						
8008-	2F••FJ60			90404-16160-	1	455	
	11115 GASKET, CYLINDER HEAD						
8008-8410	2F••FJ60			11115-61010-	1	455	
8410-	2F••FJ60			11115-61020-	1		
8510-	2H••HJ60			11115-68020-	1	567	
8008-8308	3B••BJ60		#	11115-58010- (11115-58011-)	1	455	
8308-8310	3B••BJ60		#	11115-58011- (11115-58012-)	1		
8310-8409	3B••BJ60		#	11115-58012- (11115-58040-)	1		
8409-8510	3B••BJ60			11115-58040-	1		566

GENUINE TOYOTA PARTS

PROD.DATE	MODELS	DESCRIPTION	R/P	PART NUMBER	QTY	REV.REF.CODE FROM	REV.REF.CODE UP TO
	11116A PLUG, TIGHT, NO.1						
8008-	2F..FJ60	OD=50		96411-45000-	1	455	
8510-	2H..HJ60	OD=20		96411-42000-	5	567	
8008-8509	3B..BJ60	OD=12		96411-11200-	4	455	
8509-8510	3B..BJ60	OD=12		96411-41200-	4		566
	11116B PLUG, TIGHT, NO.2						
8008-8509	2F..FJ60	OD=25		96411-42500-	6	455	
8008-8509	3B..BJ60	OD=25		96411-12500-	4	455	
8509-	3B,2H,2F..BJ60,HJ60, FJ60	OD=25		96411-42500-	6		
	11116C PLUG, TIGHT, NO.3						
[illegible]10-	2H..HJ60	OD=30		96411-43000-	12	567	
-8510	3B..BJ60	OD=21		90331-21001-	5	455	566
	[illegible] PLUG, TIGHT, NO.4						
[illegible]	2H..H[illegible]0	OD=50		96411-45000	1	567	
8008-8509	3B..BJ60	OD=28		96411-12800-	3	455	
850[illegible]-8510	3[illegible]..BJ60	OD=28		96411-42800-	3		566
	11116E PLUG, TIGHT, NO.5						
8008-8510	3B..BJ60	OD=40	#	90331-40024- (96411-44000-)	1	455	566
	11117A PLUG, W/HEAD TAPER SCREW, NO.1						
[illegible]08-8211	2F..FJ60		#	90345-54004- (90345-54005-)	1	455	
8008-	3B,2H..BJ60,HJ60			90345-54005-	2	455	
	11118A PLUG, STRAIGHT, NO.1						
8008-8408	2F..FJ60			90334-07004-	1	455	534
8408-	2F..FJ60			90334-07009-	1	535	
	11122 BUSH, VALVE GUIDE INTAKE						
8008-	2F..FJ60	STD		11122-61011-	6	455	
8008-	2F..FJ60	O/S 0.05		11123-61011-	6	455	

PROD.DATE	MODELS	DESCRIPTION	R/P	PART NUMBER	QTY	REV.REF.CODE FROM	REV.REF.CODE UP TO
	11122 BUSH, VALVE GUIDE INTAKE CONTINUED						
8510-	2H..HJ60			11122-68010-	6	567	
8008-8308	3B..BJ60	STD	#	11122-56020- (11122-56021-)	4	455	
8308-8510	3B..BJ60	STD		11122-56021-	4		566
	11126 BUSH, VALVE GUIDE EXHAUST						
8008-	2F..FJ60	STD		11126-61011-	6	455	
8008-	2F..FJ60	O/S 0.05		11127-61011-	6	455	
8510-	2H..HJ60			11122-68010-	6	567	
8008-8308	3B..BJ60	STD	#	11122-56020- (11122-56021-)	4	455	
8308-8510	3B..BJ60	STD		11122-56021-	4		566
	11131 SEAT, VALVE INTAKE						
8008-8408	2F..FJ60	STD		11131-60010-	6	455	534
8008-8408	2F..FJ60	O/S 0.03		11132-60030-	6	455	534
8408-	2F..FJ60	STD		11131-61010-	6	535	
8408-	2F..FJ60	O/S 0.03		11132-61010-	6	535	
8510-	2H..HJ60			11131-68010-	6	567	
	11135 SEAT, VALVE EXHAUST						
8008-	2F..FJ60	STD		11135-60010-	6	455	
8008-	2F..FJ60	O/S 0.03		11136-60030-	6	455	
8510-	2H..HJ60			11135-68010-	6	567	
	11201 COVER SUB-ASSY, CYLINDER HEAD						
8008-	2F..FJ60			11201-69045-	1	455	
8510-	2H..HJ60			11201-68011-	1	567	
8008-8409	3B..BJ60		*	11211-59045-	1	455	
8409-8510	3B..BJ60			11211-56031-	1		566
	11201A NUT, CAP (FOR CYLINDER HEAD COVER)						
8008-	2H,2F..HJ60,FJ60			90176-08014-	4	455	
8008-8510	3B..BJ60			11295-46010-	4	455	566

PROD.DATE	MODELS	DESCRIPTION	R/P	PART NUMBER	QTY	REV.REF.CODE FROM	REV.REF.CODE UP TO
	11201B WASHER, SEAL (FOR CYLINDER HEAD COVER)						
8008-	2H,2F..HJ60,FJ60			90210-13001-	4	455	
8008-8510	3B..BJ60			90210-12001-	4	455	566
	11213 GASKET, CYLINDER HEAD COVER						
8008-	2F..FJ60			11213-61011-	1	455	
8510-	2H..HJ60			11213-68010-	1	567	
8008-8409	3B..PJ60		#	11213-56011- (11213-56012-)	1	455	
8409-8510	3B..BJ60			11213-56012-	1		566
	12108 CAP SUB-ASSY, OIL FILLER						
8301-	2F..FJ60			12180-13010-	1		
8510-	2H..HJ60			12180-70010-	1	567	
8301-8509	3B..BJ60				1		
8509-8510	3B..BJ60			12180-13030-	1		566
8008-8301	3B,2F..PJ60,FJ60			12180-13010-	1	455	
	12108A GASKET (FOR OIL FILLER CAP)						
8008-	3B,2H,2F..BJ60,HJ60, FJ60			90430-37140-	1	455	

PROD.DATE	MODELS	DESCRIPTION	R/P	PART NUMBER	QTY	REV.REF.CODE FROM	REV.REF.CODE UP TO

(8008-)2F

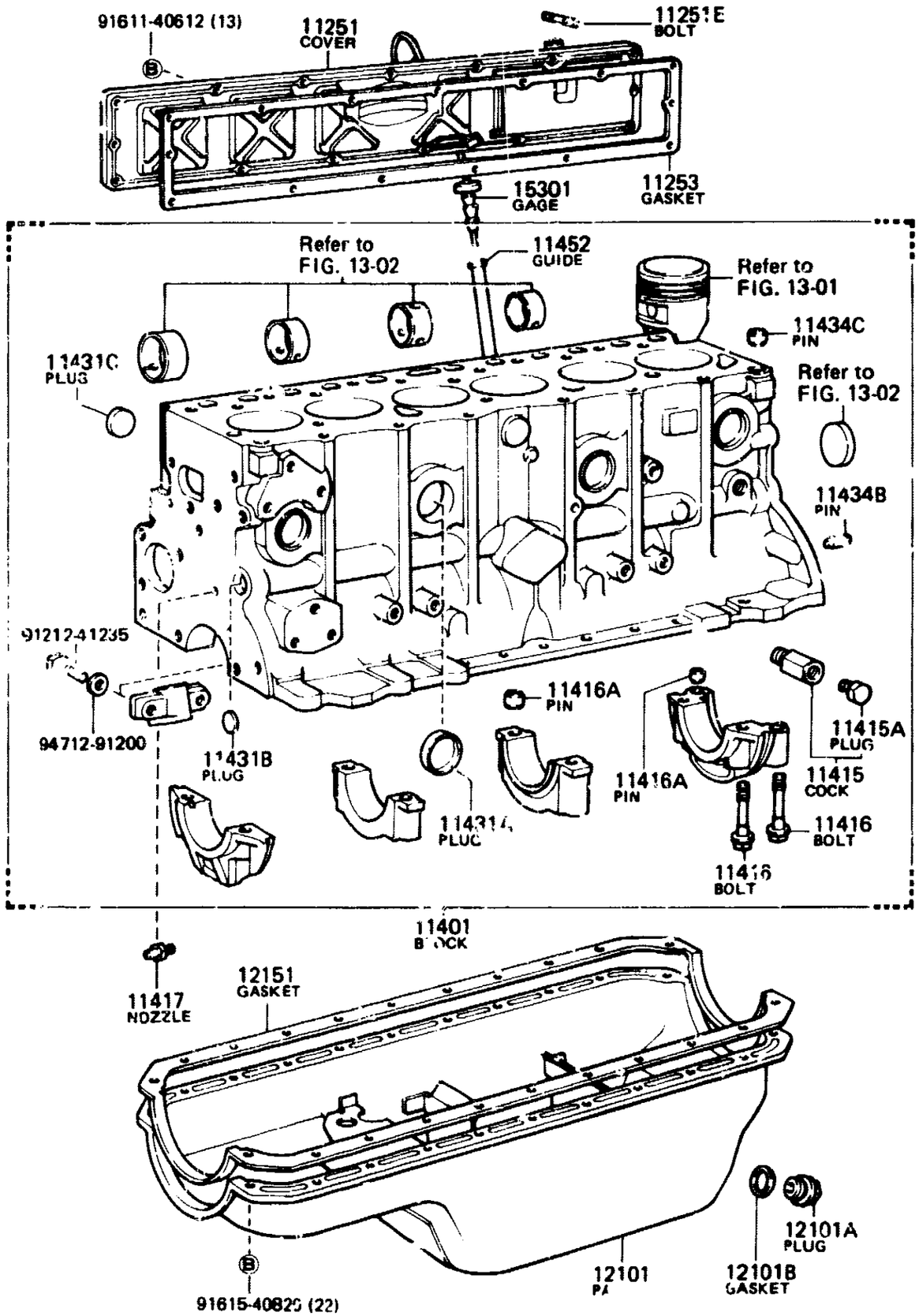

(8008-8409)3B

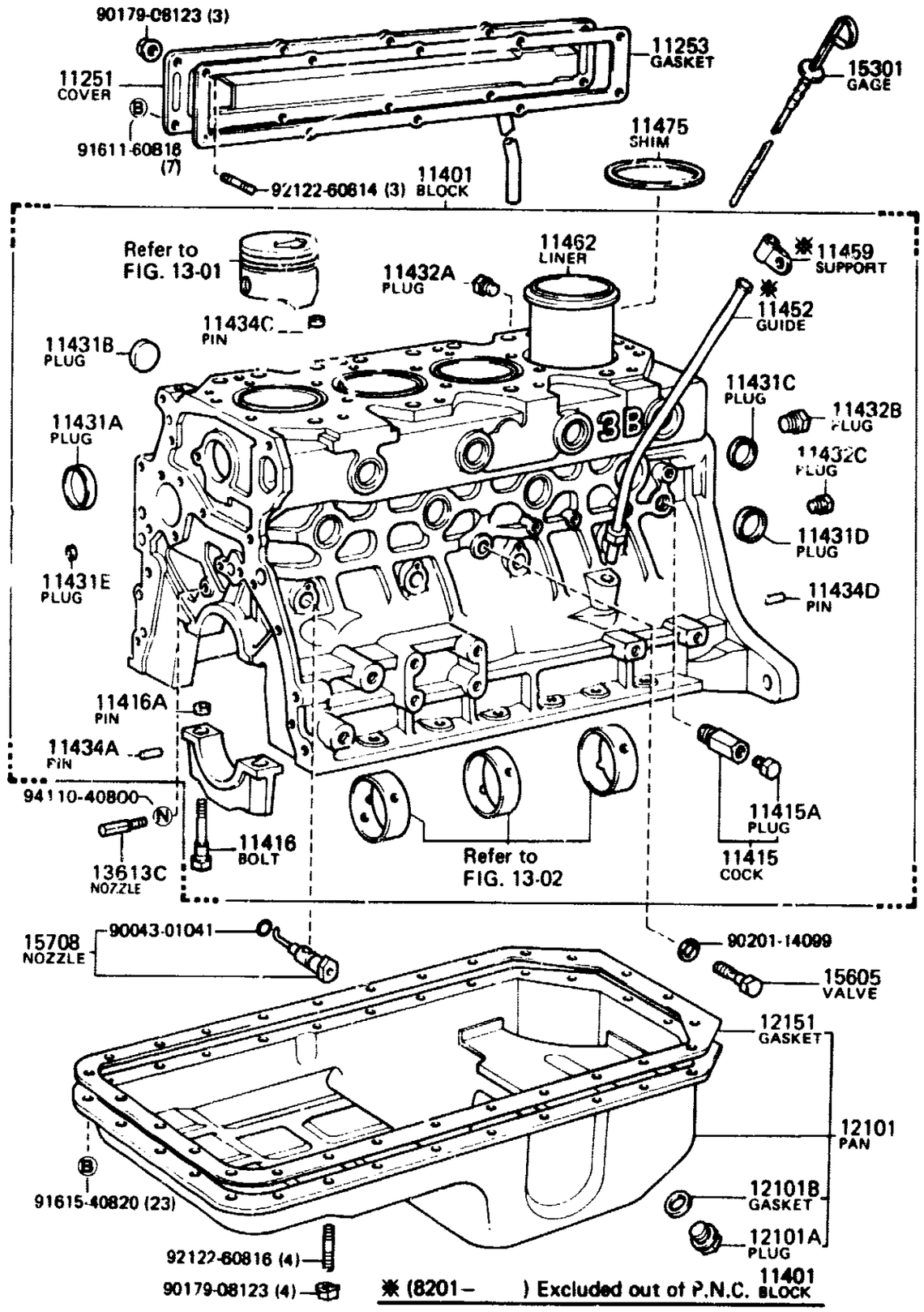

FIG.11-05 CYLINDER BLOCK

1-L1

MR4-11-0366

(8409-8510)3B

(8510-)2H

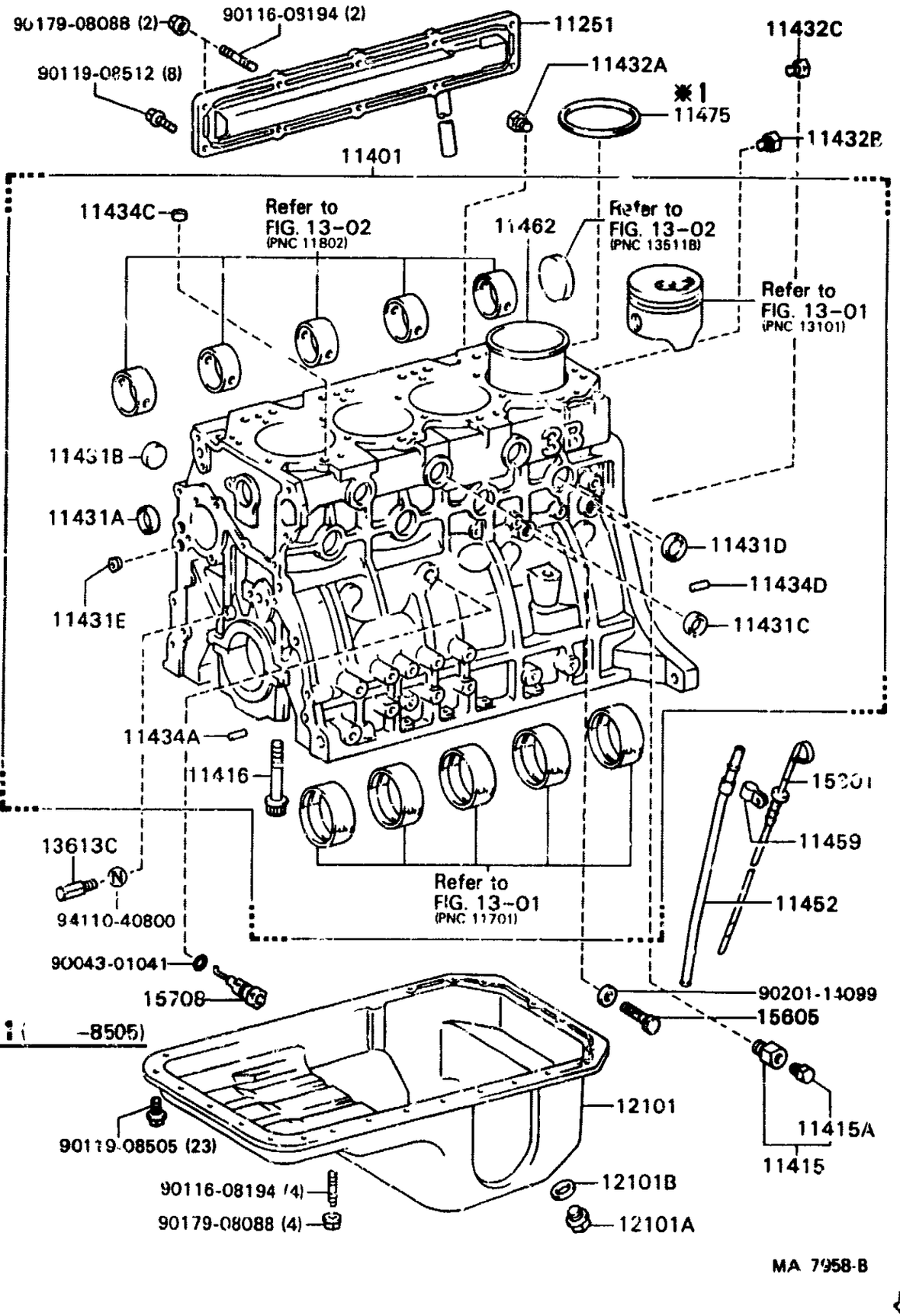

MA 7958-B

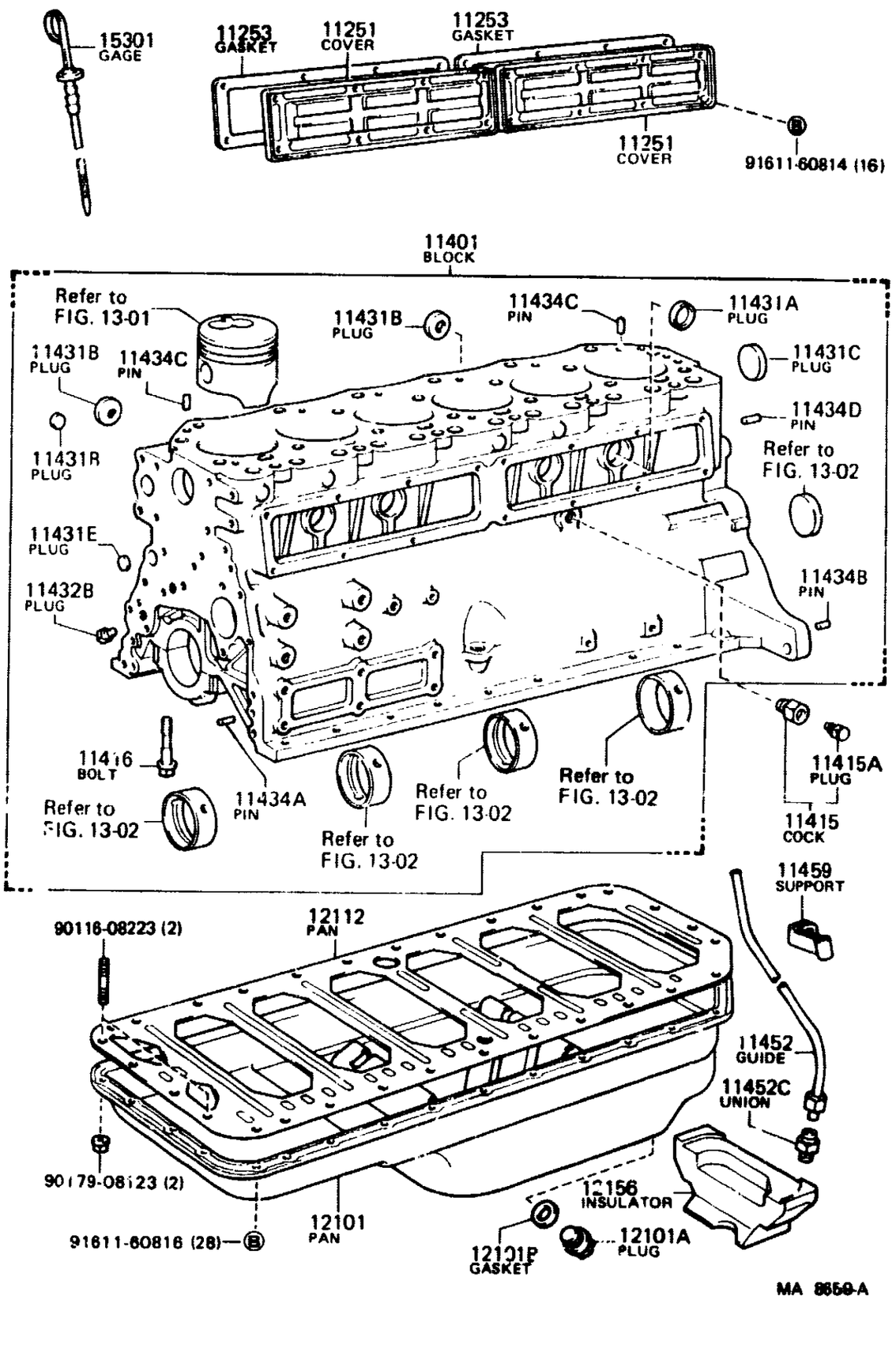

MA 8659-A

MA7958B

MA8659

GENUINE TOYOTA PARTS

PROD.DATE	MODELS	DESCRIPTION	R/P	PART NUMBER	QTY	REV.REF.CODE FROM	REV.REF.CODE UP TO
FIG. 11-05 CYLINDER BLOCK							
	11251 COVER, VALVE PUSH ROD						
8008-	2F..FJ60			11203-61011-	1	455	
8510-	2H..HJ60			11251-68010-	2	567	
8008-8409	3B..BJ60		#	11203-56030- (11203-56040-) •(11251-56040-)	1	455	
8409-8506	3B..BJ60		#	11203-56040- (11203-56041-)	1		
8506-8510	3B..BJ60			11203-56041-	1		566
	11251E BOLT, STUD (FOR VALVE PUSH ROD COVER)						
8008-	2F..FJ60	L=29,S=7&18		90116-06306-	2	455	
	11253 GASKET, VALVE PUSH ROD COVER						
8008-	2F..FJ60			11253-60010-	1	455	
8510-	2H..HJ60			11253-68010-	2	567	
8008-8409	3B..BJ60			11253-56010-	1	455	
	11401 BLOCK SUB-ASSY, CYLINDER						
8008-8410	2F..FJ60		*	11401-69055-	1	455	
8410-	2F..FJ60			11401-69056-	1		
8510-	2H..HJ60			11401-69196-	1	567	
8008-8201	3B..BJ60		*	11401-59075-	1	455	476
8201-8209	3B..BJ60		#	11401-59115- (11401-59225-)	1	477	
8209-8403	3B..BJ60		#	11401-59225- (11401-59226-)	1		
8403-8409	3B..BJ60		*	11401-59226- (11401-59227-) •(91611-60820-)	1		
8409-8510	3B..BJ60			11401-59305-	1		566
	11415 COCK SUB-ASSY, WATER DRAIN (FOR CYLINDER BLOCK)						
8407-8410	2F..FJ60		#	96431-03833- (96431-53828-)	1		544
8410-8504	2F..FJ60		#	90910-09070- (96431-53828-)	1	545	

PROD.DATE	MODELS	DESCRIPTION	R/P	PART NUMBER	QTY	REV.REF.CODE FROM	REV.REF.CODE UP TO
	11415 COCK SUB-ASSY, WATER DRAIN (FOR CYLINDER BLOCK) CONTINUED						
8407-8504	3B..BJ60		#	90910-09070- (96431-53828-)	1		
8008-8407	3B,2F..BJ60,FJ60		#	96431-03833- (96431-53828-)	1	455	
8504-	3B,2H,2F..BJ60,HJ60, FJ60			96431-53828-	1		
	11415A PLUG, WATER DRAIN COCK (FOR CYLINDER BLOCK)						
8407-8410	2F..FJ60			96431-23814-	1		544
8410-8504	2F..FJ60		#	90910-09072- (96432-23814-)	1	545	
8407-8504	3B..BJ60				1		
8008-8407	3B,2F..BJ60,FJ60			96431-23814-	1	455	
8504-	3B,2H,2F..BJ60,HJ60, FJ60			96432-23814-	1		
	11416 BOLT (FOR CRANKSHAFT BEARING CAP SET)						
8008-8410	2F..FJ60	FR,X14-2.0PX67-29	#	90910-02054- (90105-14033-)	6	455	
8008-	2F..FJ60	RR,X12-1.75PX68-26		90910-02057-	4	455	
8410-	2F..FJ60	FR,X18-2PX65-27		90105-14033-	6		
8510-	2H..HJ60	X14-1.5PX81-25		90105-14039-	14	567	
8008-8409	3B..BJ60	X13-1.5PX78.5-20		90101-13001-	10	455	
8409-85..	..BJ60	X16-2PX88.5-32		90109-16001-	10		566
	11416A PIN, RING (FOR CRANKSHAFT BEARING CAP SET)						
8008-8406	2F..FJ60	NO.1.2.3		90253-17007-	6	455	
8008-	2F..FJ60	NO.4		90253-16014-	2	455	
8406-	2F..FJ60	NO.1.2.3		90253-18003-	6		
8008-8409	3B..BJ60			90253-18002-	10	455	
	11417 NOZZLE, OIL						
8008-	2F..FJ60			90915-01014-	1	455	

* O—O PX O—O =
Outside diameter—Pitch x Bolt length—Thread length

PROD.DATE	MODELS	DESCRIPTION	R/P	PART NUMBER	QTY	REV.REF.CODE FROM	REV.REF.CODE UP TO
	11431A PLUG, TIGHT, NO.1 (FOR CYLINDER BLOCK)						
8008-	2F..FJ60	OD=50		96411-45000-	5	455	
8510-	2H..HJ60	OD=35		96411-43500-	4	567	
8008-8510	3B..BJ60	OD=51		90331-51032-	2	455	566
	11431B PLUG, TIGHT, NO.2 (FOR CYLINDER BLOCK)						
8008-8406	2F..FJ60			90330-24013-	2	455	
8406-	2F..FJ60			90344-54003-	2		
8510-	2H..HJ60	OD=35,ID=12		90331-35002-	2	567	
8510-	2H..HJ60	OD=35,ID=14		90331-35003-	2	567	
8510-	2H..HJ60	OD=20		96411-42000-	1	567	
8008-8509	3B..BJ60	OD=28		96411-12800-	4	455	
8509-8510	3B..BJ60	OD=28		96411-42800-	4		566
	11431C PLUG, TIGHT, NO.3 (FOR CYLINDER BLOCK)						
8008-	2F..FJ60	OD=25		96411-42500-	4	455	
8510-	2H..HJ60	OD=50		96411-45000-	2	567	
8008-8509	3B..BJ60	OD=30		96411-13000-	5	455	
8509-8510	3B..BJ60	OD=30		96411-43000-	4		566
	11431D PLUG, TIGHT, NO.4 (FOR CYLINDER BLOCK)						
8008-8509	3B..BJ60	OD=35		96411-13500-	4	455	
8509-8510	3B..BJ60	OD=35		96411-43500-	4		566
	11431E PLUG, TIGHT, NO.5 (FOR CYLINDER BLOCK)						
8510-	2H..HJ60	OD=18		96411-11800-	2	567	
8008-8509	3B..BJ60	OD=14		96411-11400-	3	455	
8509-8510	3B..BJ60	OD=14		96411-41400-	2		566
	11432A PLUG, W/HEAD TAPER SCREW, NO.1						
8008-8411	3B..BJ60			90043-45010-	3	455	514
8411-8510	3B..BJ60			90043-45027-	3	515	566

PROD.DATE	MODELS	DESCRIPTION	R/P	PART NUMBER	QTY	REV.REF.CODE FROM	REV.REF.CODE UP TO
	11432B PLUG, W/HEAD TAPER SCREW, NO.2						
8510-	2H..HJ60			90345-51003-	1	567	
8008-8510	3B..BJ60			90345-53001-	1		566
	11432C PLUG, W/HEAD TAPER SCREW, NO.3						
8008-8510	3B..BJ60			90345-52001-	1	455	566
	11434A PIN, STRAIGHT (FOR TIMING GEAR COVER SET)						
8510-	2H..HJ60	L=23,OD=8		90250-08054-	1	567	
8008-	3B,2H..BJ60,HJ60	L=18,OD=8		90250-08120-	4	455	
	11434B PIN, STRAIGHT (FOR CLUTCH HOUSING SET)						
3008-	2F..FJ60			90250-10192-	2	455	
8510-	2H..HJ60	L=23,OD=8		90250-08054-	2	567	
	11434C PIN, STRAIGHT (FOR CYLINDER HEAD SET)						
8008-	2F..FJ60			90253-17003-	2	455	
8510-	2H..HJ60	FR,L=12,OD=6		90250-06037-	1	567	
8510-	2H..HJ60	RR,L=15,OD=8		90250-08074-	1	567	
8008-8510	3B..BJ60			90253-15005-	2	455	566
	11434D PIN, STRAIGHT (FOR ENGINE REAR OIL SEAL)						
8510-	2H..HJ60	L=23,OD=8		90250-08054-	1	567	
8008-8510	3B..BJ60			90250-08120-	2	455	566
	11452 GUIDE, OIL LEVEL GAGE						
8008-8410	2F..FJ60			* 11452-60013- (11452-61010-)	1	455	
8410-	2F..FJ60			11452-61010-	1		
8510-	2H..HJ60			11409-68020-	1	567	
8008-8409	3B..BJ60			11452-5604	1	455	
8409-8510	3B..BJ60			11452-5605	1		566
	11452C UNION (FOR OIL LEVEL GAGE GUIDE)						
8510-	2H..HJ60			90335-11600-	1	567	

PROD.DATE	MODELS	DESCRIPTION	R/P	PART NUMBER	QTY	REV.REF.CODE FROM	REV.REF.CODE UP TO
	11459 SUPPORT, OIL LEVEL GAGE GUIDE						
8510-	2H••HJ60			11459-68020-	1	567	
8008-8510	3B••BJ60			11459-56040-	1	455	566
	11462 LINER, CYLINDER						
8008-8409	3B••BJ60		*	11461-58010- (11461-58020-)	4	455	
8409-8510	3B••BJ60			11461-58020-	4		566
	11475 SHIM, CYLINDER LINER						
8008-8505	3B••BJ60	T=0.05		11475-58010-	33	455	
8008-8505	3B••BJ60	T=0.10		11476-58010-	33	455	
	12101 PAN SUB-ASSY, OIL						
8008-8205	2F••FJ60		*	12101-61010- (12101-61011-) •(90341-18089-) •(90430-18244-)	1	455	468
8205-	2F••FJ60			12101-61011-	1	469	
8510-	2H••HJ60			12101-68012-	1	567	
8008-8409	3B••BJ60			12101-59145-	1	455	
8409-8510	3B••BJ60			12101-56060-	1		566
	12101A PLUG (FOR OIL PAN DRAIN)						
8008-8205	2F••FJ60	OD=25		90341-25054-	1	455	468
8008-8205	3B••BJ60			90341-18089-	1	455	
8205-	3B,2H,2F••BJ60,HJ60, FJ60	OD=18			1	469	
	12101B GASKET (FOR OIL PAN DRAIN PLUG)						
8008-8205	2F••FJ60	ID=25		90430-25013-	1	455	468
8601-	2F••FJ60			90430-18013-	1		
8601-	2H••HJ60	ID=18		90430-18244-	1		
8008-8205	3B••BJ60				1	455	
8205-8601	3B,2H,2F••BJ60,HJ60, FJ60	ID=18			1	469	

PROD DATE	MODELS	DESCRIPTION	R/P	PART NUMBER	QTY	REV.REF.CODE FROM	REV.REF.CODE UP TO
	12151 GASKET, OIL PAN						
8008-8410	2F••FJ60		*	12151-60021- (12151-61010-)	1	455	
8410-	2F••FJ60			12151-61010-	1		
8008-8409	3B••BJ60			12151-56030-	1	455	
	13650C NOZZLE, OIL						
8008-8510	3B••BJ60			90915-01015-	1	455	566
	15301 GAGE SUB-ASSY, OIL LEVEL						
8008-	2F••FJ60			15301-61010-	1	455	
8510-	2H••HJ60			15301-68020-	1	567	
8008-8409	3B••BJ60			15301-56020-	1	455	
8409-8510	3B••BJ60			15301-56040-	1		566
	15605 VALVE SUB-ASSY, OIL CHECK						
8008-8510	3B••BJ60			15605-58010-	1	455	566
	15708 NOZZLE, SUB-ASSY OIL, NO.1						
8008-8409	3B••BJ60			15708-58010-	4	455	
8409-8510	3B••BJ60			15708-58020-	4		566

FIG.11-06 TIMING GEAR COVER & REAR END PLATE 1-C2

(8008-)2F

(8008-8510)3B

ILLUST.NO. 1OF2

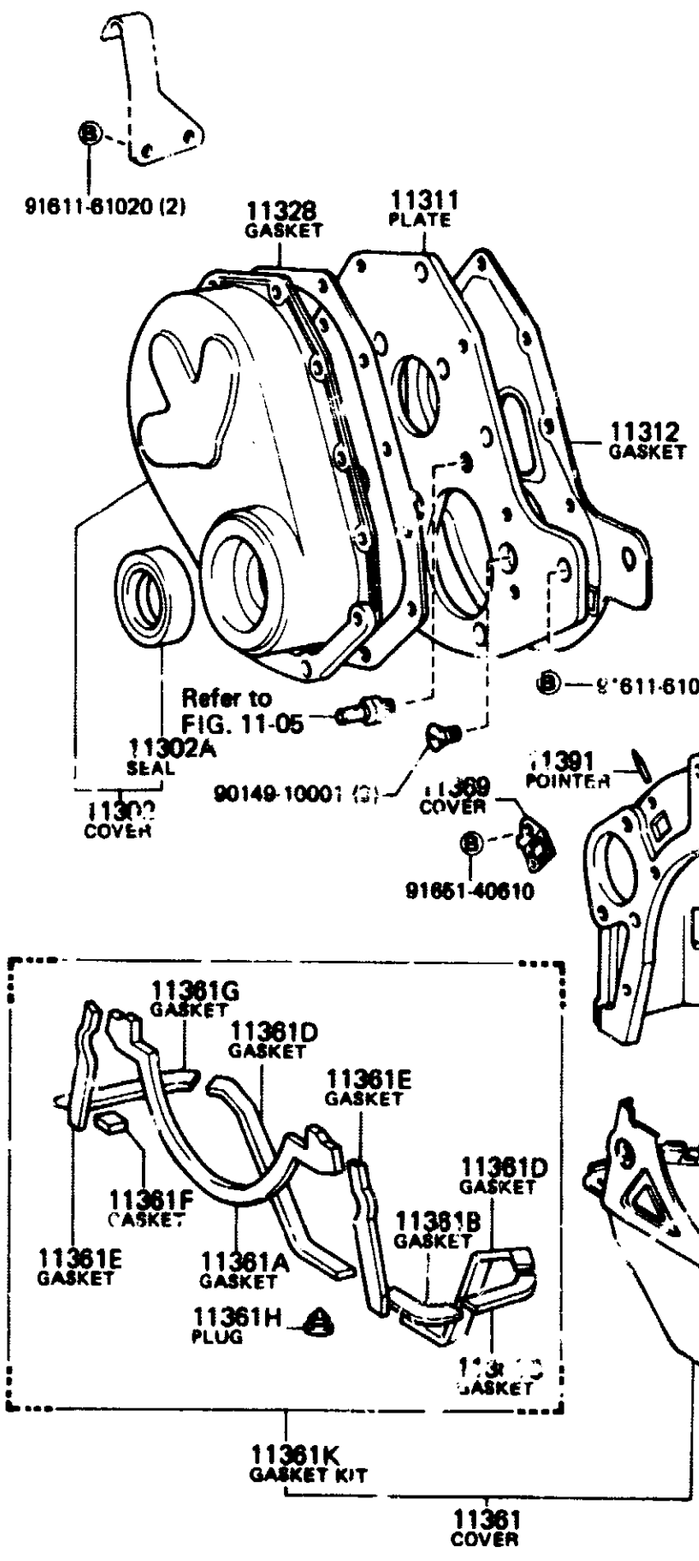

①		90119-10041 (2)
②	S	93381-26014 (4)
③	S	93381-16008 (6)
✱1 ⑤	S	93381-16016 (2)
		90179-06158 (2)

✱ USA

MA 4784-F

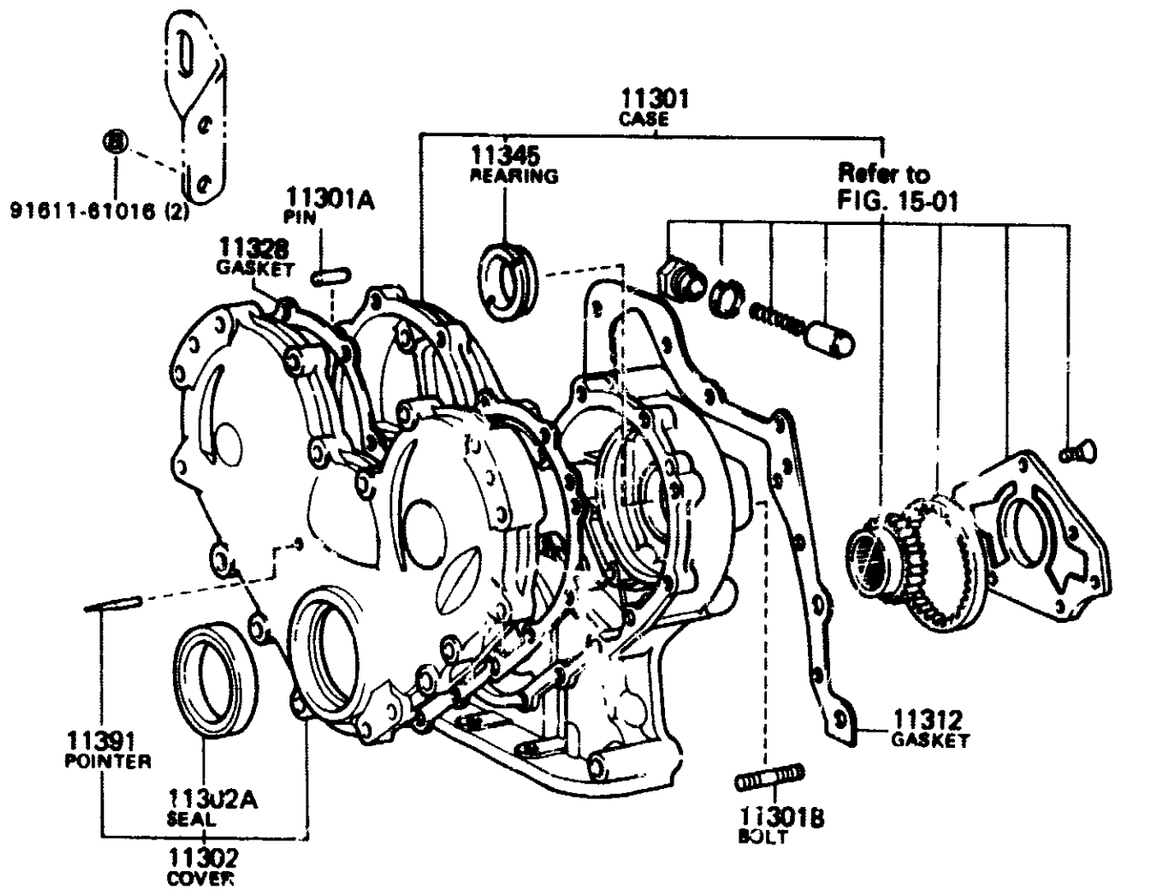

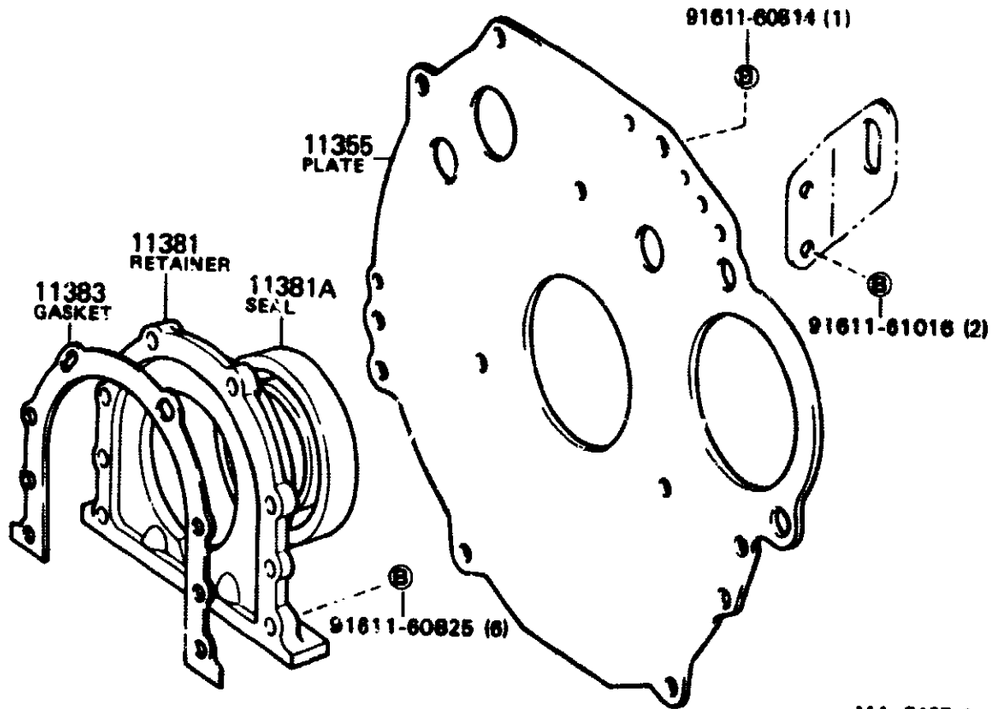

MA 6197-A

FIG. 11-06 TIMING GEAR COVER & REAR END

PLATE 1-D2

MR4-11-0368

(8008-8510)3B

(8510-)2H

ILLUST. NO. 20F2

(-8210)

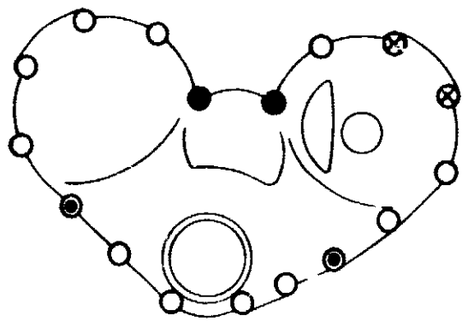

○	Ⓑ	91611-60835 (1)
●		90119-08145 (2)
◉		90119-10073 (2)
⊗		90119-08242 (2)

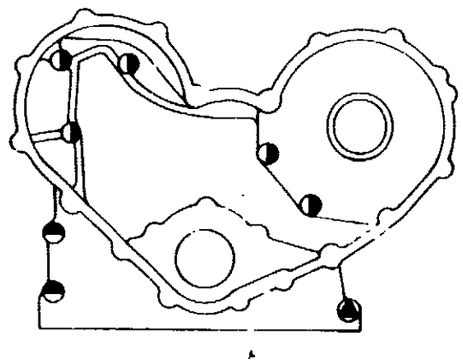

◑	Ⓑ	91611-60825 (5)
◒	Ⓑ	91611-61060 (2)
◭		90119-10073 (1)

(8210-)

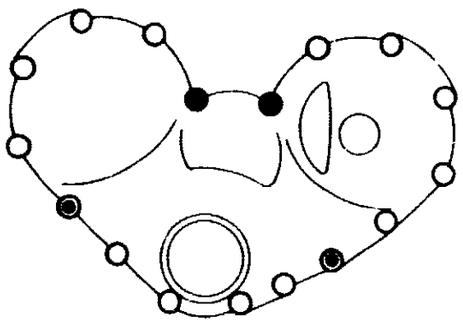

○	Ⓑ	91611-60835 (13)
●		90119-08145 (2)
◉		90119-10073 (2)

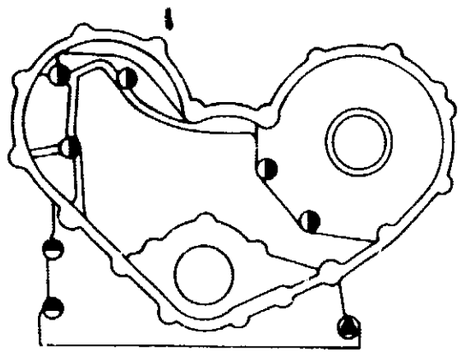

◑	Ⓑ	91611-60825 (5)
◒	Ⓑ	91611-61060 (2)
◭		90119-10073 (1)

MA 6217

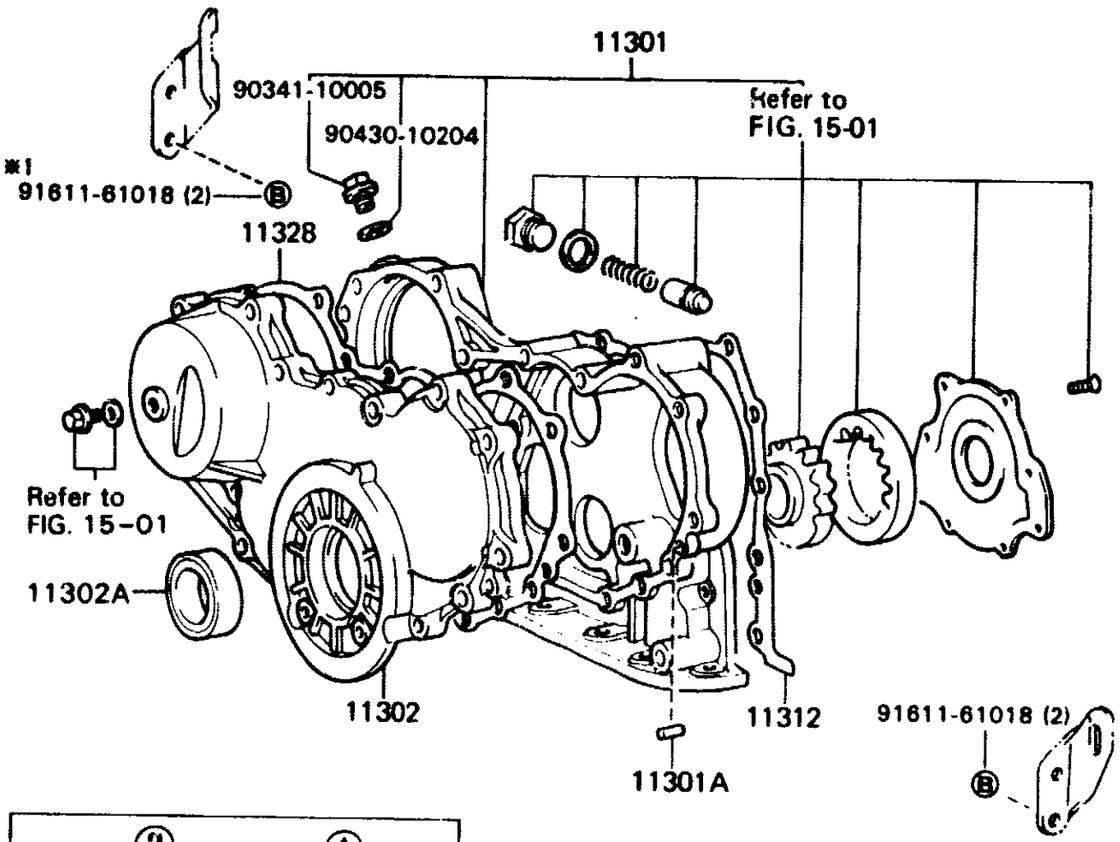

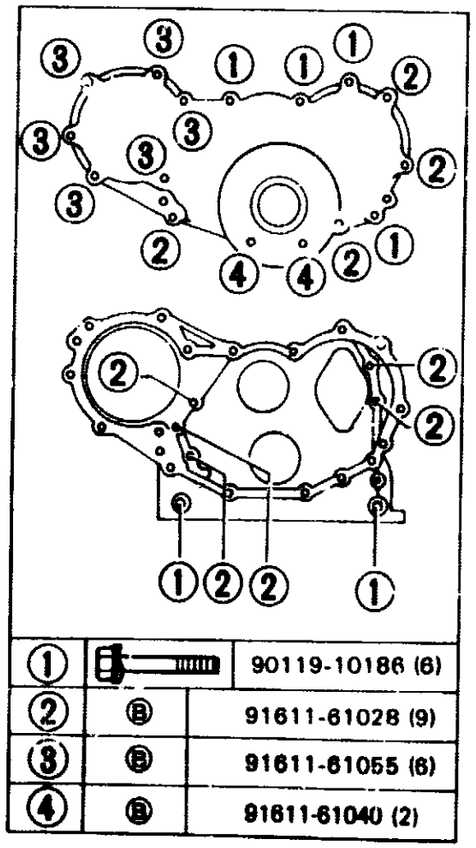

①		90119-10186 (6)
②	Ⓑ	91611-61028 (9)
③	Ⓑ	91611-61055 (6)
④	Ⓑ	91611-61040 (2)

*1 W/O COOLER
*2 ATM

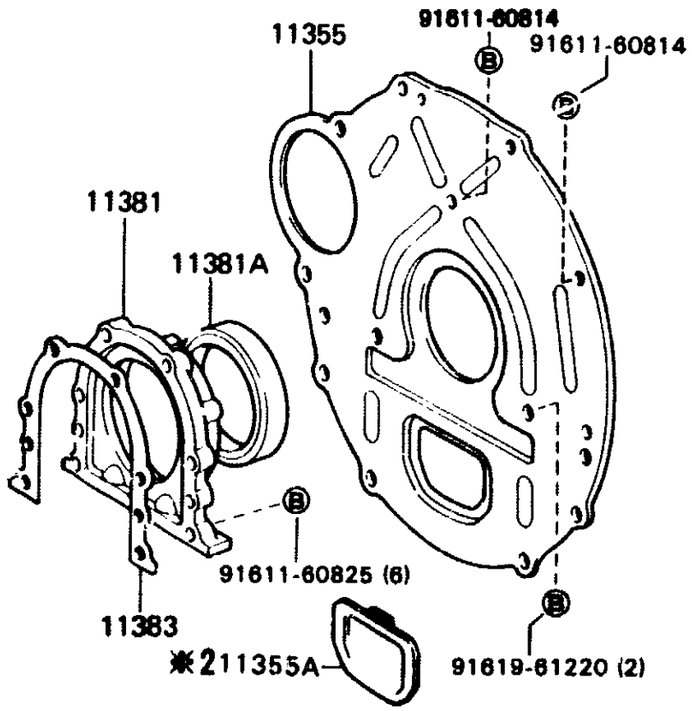

MA 8734

PROD.DATE	MODELS	DESCRIPTION	R/P	PART NUMBER	QTY	REV.REF.CODE FROM	REV.REF.CODE UP TO
FIG. 11-06 TIMING GEAR COVER & REAR END PLATE							
	11301 CASE SUB-ASSY, TIMING GEAR						
8510-	2H..HJ60			11301-68020-	1	567	
8008-8402	3B..BJ60			# 11301-56030- (11301-56031- .(91611-60820-	1	455	
8402-8510	3B..BJ60			11301-56031-	1		566
	11301A PIN, STRAIGHT (FOR TIMING GEAR CASE)						
8008-	3B,2H..BJ60,HJ60	L=18,OD=8		90250-08120-	2	455	
	11301B BOLT,STUD (FOR TIMING GEAR CASE)						
8008-8510	3B..BJ60			90116-10048-	3	455	566
	11302 COVER SUB-ASSY, TIMING CHAIN OR BELT						
8008-8410	2F..FJ60			# 11302-61020- (11302-61030- .(11328-61010-	1	455	542
8410-	2F..FJ60			11302-61030-	1	543	
8510-	2H..HJ60			11321-68020-	1	567	
8008-8510	3B..BJ60			11302-56030-	1	455	566
	11302A SEAL, OIL (FOR TIMING GEAR COVER)						
8008-8410	2F..FJ60			90311-45069-	1	455	542
8410-	2F..FJ60			90311-45008-	1	543	
8510-	2H..HJ60			90311-50006-	1	567	
8008-8503	3B..BJ60			# 90311-50002- (90311-50007-	1	455	
8503-8510	3B..BJ60			90311-50007-	1		566
	11308 COVER SUB-ASSY, FLYWHEEL HOUSING						
8008-8010	2F..FJ60			# 31111-60030- (31111-60031-	1	455	
8010-8307	2F..FJ60			# 31111-60031- (31111-60032-	1		
8307-	2F..FJ60			31111-60032-	1		

PROD.DATE	MODELS	DESCRIPTION	R/P	PART NUMBER	QTY	REV.REF.CODE FROM	REV.REF.CODE UP TO
	11311 PLATE, FRONT END						
8008-8405	2F..FJ60			# 11311-61010- (11311-61020-	1	455	
8405-	2F..FJ60			11311-61020-	1		
	11312 GASKET, FRONT END PLATE						
8008-8410	2F..FJ60			11312-61010-	1	455	
8410-	2F..FJ60			11312-61020-	1		
8510-	2H..HJ60			11312-68010-	1	567	
8008-8409	3B..BJ60			# 11312-56030- (11312-56031-	1	455	
8409-8510	3B..BJ60			11312-56031-	1		566
	11328 GASKET, TIMING GEAR (OR CHAIN) COVER						
8008-8410	2F..FJ60			11328-60010-	1	455	542
8410-	2F..FJ60			11328-61010-	1	543	
8510-	2H..HJ60			11328-68020-	1	567	
8008-8510	3B..BJ60			11328-56030-	1	455	566
	11345 BEARING, INJECTION PUMP GEAR THRUST						
8008-8510	3B..BJ60			11345-48010-	1	455	566
	11355 PLATE, REAR END						
8510-	2H..HJ60..ATM			11355-68020-	1	567	
8510-	2H..HJ60..MTM			11355-68011-	1	567	
8008-8411	3B..BJ60			11355-56040-	1	455	514
8411-8502	3B..BJ60			11355-56052-	1	515	584
8502-8510	3B..BJ60			11355-56053-	1	585	566
	11355A PLUG, HOLE (FOR REAR END PLATE)						
8510-	2H..HJ60..ATM			90950-01263-	1	567	
	11361 COVER, FLYWHEEL HOUSING UNDER						
8008-	2F..FJ60			31104-60020-	1	455	
	11361A GASKET, CLUTCH UNDER COVER, NO.1						
8008-	2F..FJ60			31131-60010-	1	455	

PROD.DATE	MODELS	DESCRIPTION	R/P	PART NUMBER	QTY	REV.REF.CODE FROM	REV.REF.CODE UP TO
	11361B	GASKET, CLUTCH UNDER COVER, NO.2					
8008-	2F••FJ60			31132-60020-	1	455	
	11361C	GASKET, CLUTCH UNDER COVER, NO.3					
8008-	2F••FJ60			31133-60020-	1	455	
	11361D	GASKET, CLUTCH UNDER COVER, NO.4					
8008-	2F••FJ60			31134-60020-	2	455	
	11361E	GASKET, CLUTCH UNDER COVER, NO.5					
8008-	2F••FJ60			31135-60020-	2	455	
	11361F	GASKET, CLUTCH UNDER COVER, NO.6					
8008-	2F••FJ60			31136-60010-	1	455	
	11361G	GASKET, CLUTCH UNDER COVER, NO.7					
8008-	2F••FJ60			31137-60010-	1	455	
	11361H	PLUG, HOLE (FOR CLUTCH UNDER COVER)					
8008-	2F••FJ60			90950-01200-	1	455	
	11361K	GASKET KIT, CLUTCH UNDER COVER					
8008-	2F••FJ60			04317-60020-	1	455	
	11369	COVER, FLYWHEEL HOUSING FRONT					
8008-	2F••FJ60			11369-60011-	1	455	
	11381	RETAINER, ENGINE REAR OIL SEAL					
8510-	2H••HJ60			11381-68010-	1	567	
8008-8409	3B••BJ60			# 11381-56030- (11381-56031- •(91611-60820-	1	455	
8409-8510	3B••BJ60			11381-56031-	1		566
	11381A	SEAL, ENGINE REAR OIL					
8510-	2H••HJ60			90311-95002-	1	567	
8008-8502	3B••BJ60			90311-95001-	1	455	
8502-8510	3B••BJ60			90311-95003-	1		566

GENUINE TOYOTA PARTS

PROD.DATE	MODELS	DESCRIPTION	R/P	PART NUMBER	QTY	REV.REF.CODE FROM	REV.REF.CODE UP TO
	11383	GASKET, ENGINE REAR OIL SEAL RETAINER					
8510-	2H••HJ60			11383-47010-	1	567	
8008-8409	3B••BJ60			11383-56030-	1	455	
8409-8510	3B••BJ60			11383-56031-	1		566
	11391	POINTER, TIMING					
8008-	2F••FJ60			11391-60010-	1	455	
8008-8510	3B••BJ60			11391-56020-	1	455	566

(800M-8411)2F

(8411-)2F

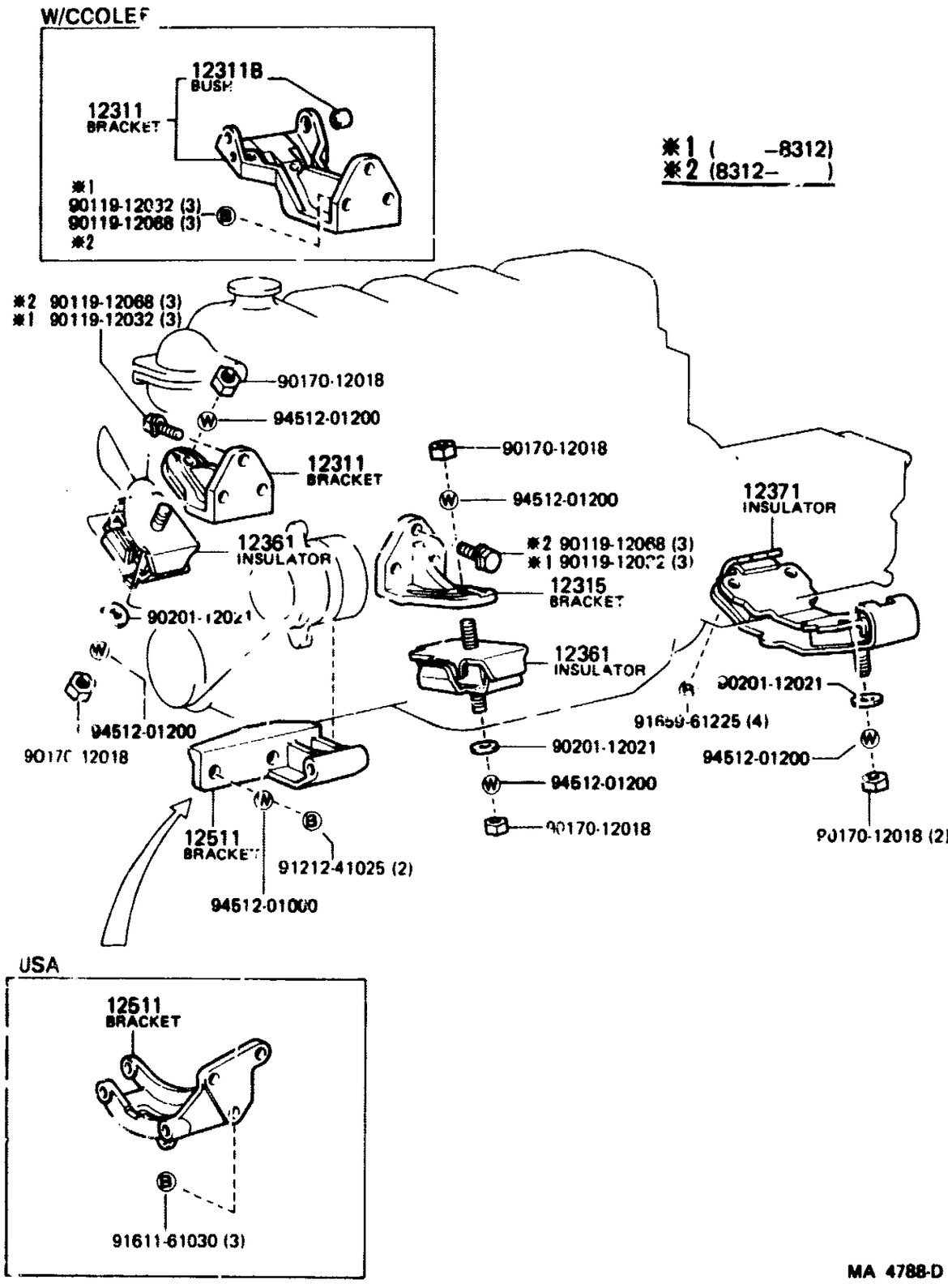

MA 4788-D

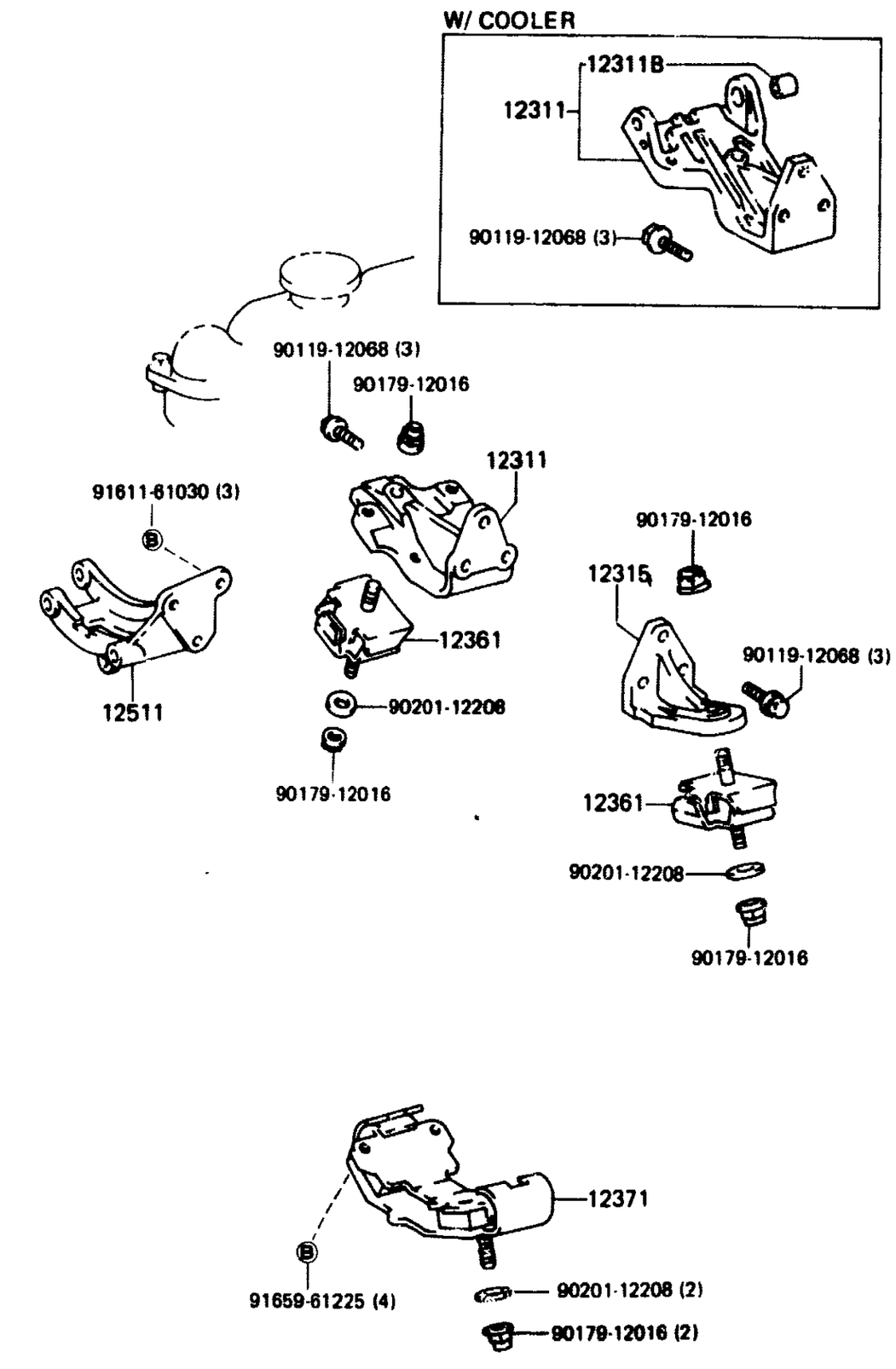

MA 8011-A

(8008-8411)3B

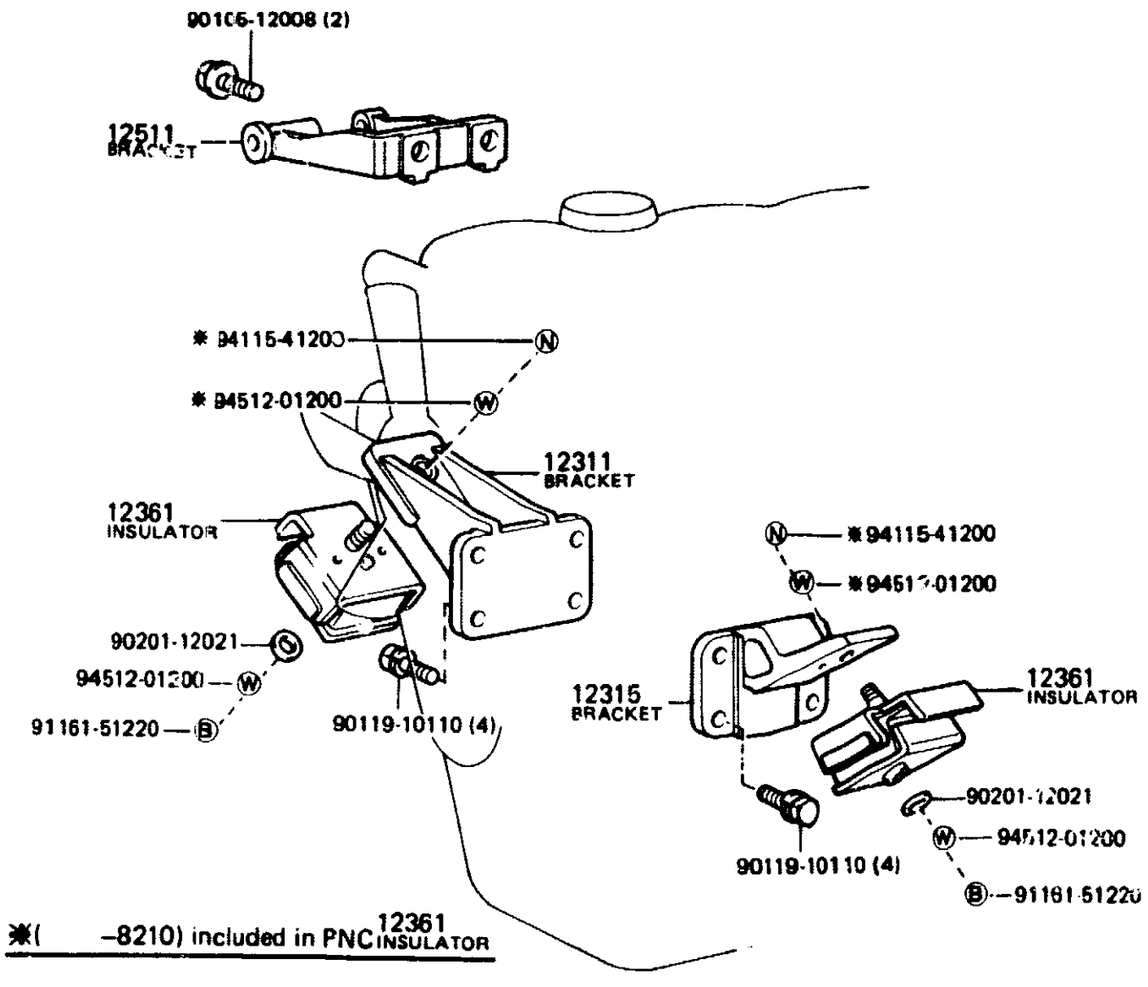

*(-8210) included in PNC

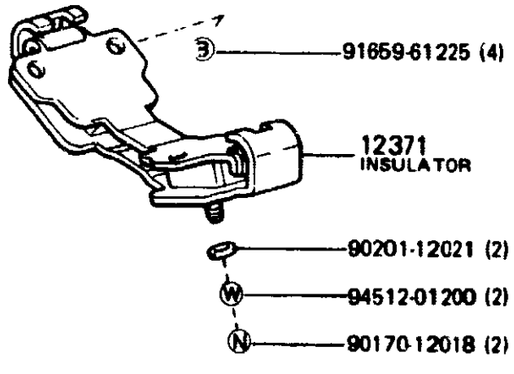

MA 6321-A

(8411-8510)3B

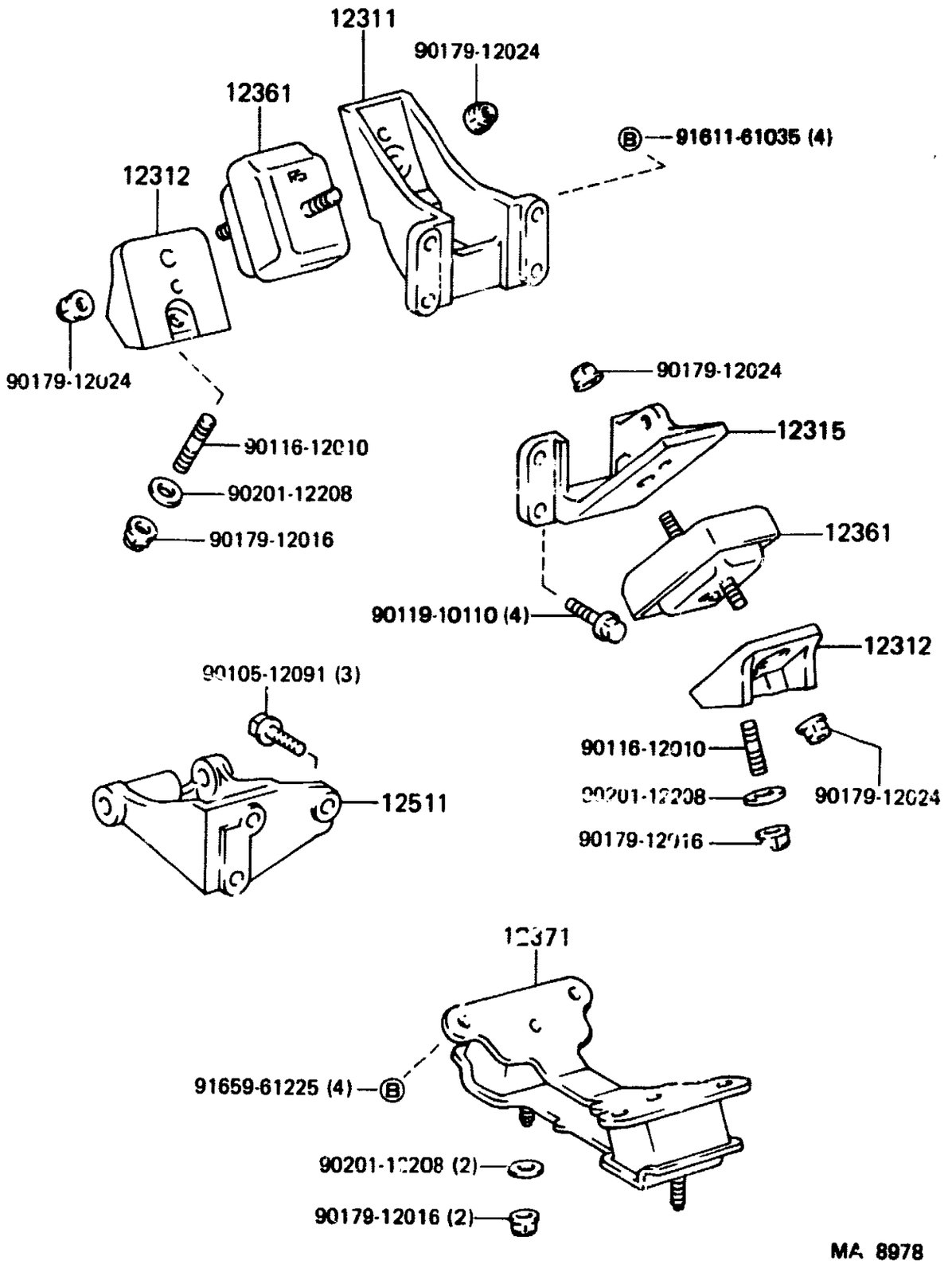

MA 8978

FIG. 11-07 MOUNTING

(8510-)2H

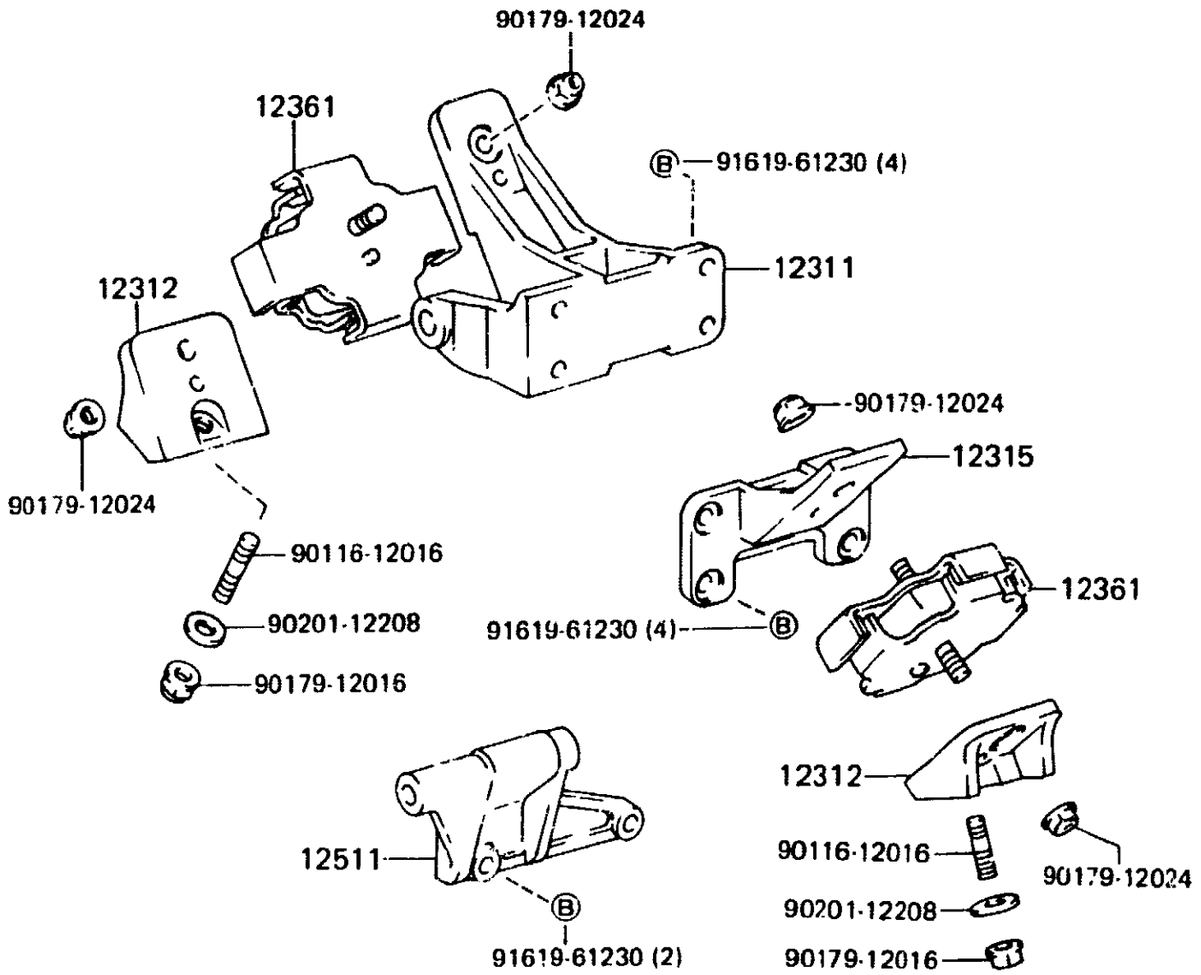

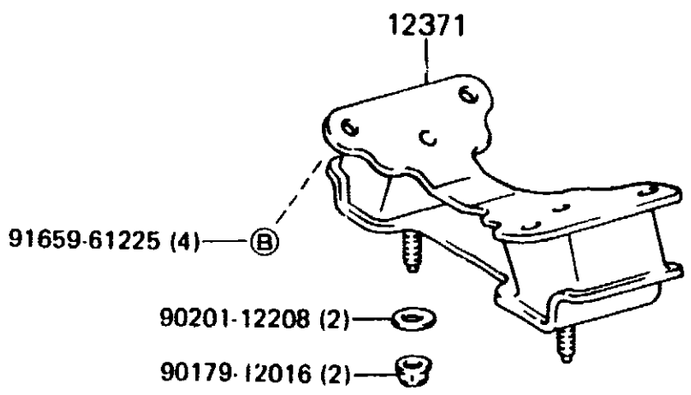

MA 8735

GENUINE TOYOTA PARTS

	PROD.DATE	MODELS	DESCRIPTION	R/P	PART NUMBER	QTY	REV.REF.CODE FROM	REV.REF.CODE UP TO
		FIG. 11-07 MOUNTING						
		12311 BRACKET, ENGINE MOUNTING, FRONT NO.1 RH						
	8008-8312	2F..FJ60			# 12311-61011- (12311-61012-) •(90119-12068-)	1	455	500
	8312-8411	2F..FJ60			# 12311-61012- (12311-61070-)	1	501	
C	8411-8604	2F..FJ60			12311-61070-	1		572
	8411-	2F..FJ60	W/COOLER		12301-61014-	1		
	8008-8312	2F..FJ60..USA	W/COOLER		# 12301-61012- (12301-61013-) •(90119-12068-)	1	455	500
	8312-8411	2F..FJ60..USA	W/COOLER		# 12301-61013- (12301-61014-)	1	501	
	8510-	2H..HJ60			12301-68010-	1	567	
	8008-8411	3B..BJ60			12311-56020-	1	455	514
	8411-8510	3B..BJ60			12311-58031-	1	515	566
		12311B BUSH (FOR ENGINE MOUNTING BRACKET)						
	8008-	2F..FJ60..USA	W/COOLER		90387-10028-	1	455	
		12312 BRACKET, ENGINE MOUNTING, FRONT, NO.2						
	8510-	2H..HJ60	RH		12312-68010-	1	567	
	8510-	2H..HJ60	LH		12316- 8010-	1	567	
	8411-8510	3B..BJ60			12312-68010-	2	515	566
		12315 BRACKET, ENGINE MOUNTING, FRONT NO.1 LH						
	8008-8312	2F..FJ60			# 12315-61011- (12315-61012-) •(90119-12068-)	1	455	500
	8312-8411	2F..FJ60			# 12315-61012- (12315-61013-)	1	501	
	8411-	2F..FJ60			12315-61013-	1		
	8510-	2H..HJ60			12315-68040-	1	567	
	8008-8205	3B..BJ60			# 12315-56010- (12315-56011-)	1	455	
	8205-8411	3B..BJ60			12315-56011-	1		514
	8411-8510	3B..BJ60			12315-58020-	1	515	566

PROD.DATE	MODELS	DESCRIPTION	R/P	PART NUMBER	QTY	REV.REF.CODE FROM	REV.REF.CODE UP TO
	12361 INSULATOR, ENGINE MOUNTING, FRONT						
8008-	2F..FJ60			12361-61020-	2	455	
8510-	2H..HJ60			12361-68051-	2	567	
8008-8210	3B..BJ60		#	12361-59035-	2	455	466
				(12361-56031-)			
				.(94115-41200-)			
				.(94512-01200-)			
8210-8411	3B..BJ60			12361-56031-	2	467	514
8411-8510	3B..BJ60			12361-58030-	2	515	566
	12371 INSULATOR, ENGINE MOUNTING, REAR NO.1						
8008-8411	2F..FJ60			12371-61020-	1	455	514
8411-	2F..FJ60			12371-61030-	1	515	
8510-	2H..HJ60..ATM			12371-68050-	1	567	
8510-	2H..HJ60..MTM			12371-68040-	1	567	
8008-8411	3B..BJ60			12371-58010-	1	455	514
8411-8510	3B..BJ60			12371-58020-	1	515	566
	12511 BRACKET, ALTERNATOR, NO.1						
8008-8110	2F..FJ60..CND			12511-60081-	1	455	458
8008-	2F..FJ60..USA			12511-61021-	1	455	
8510-	2H..HJ60			12511-68030-	1	567	
8008-8202	3B..BJ60		#	12511-56030-	1	455	
				(12511-56031-)			
8202-8409	3B..BJ60			12511-56031-	1		
8409-8510	3B..BJ60			12511-56040-	1		566

(8008-)2F

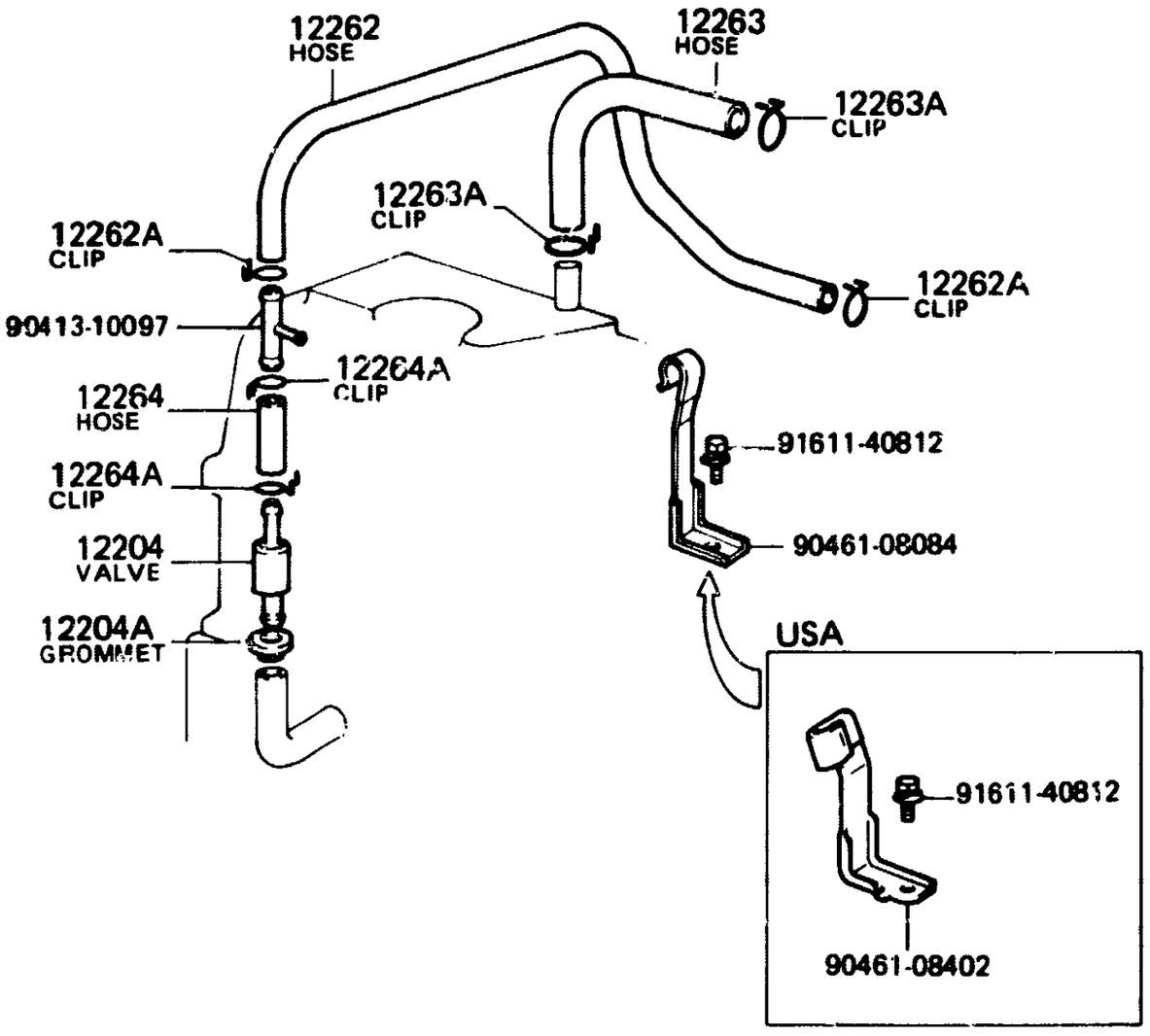

MA 4792-A

(8008-8510)3B

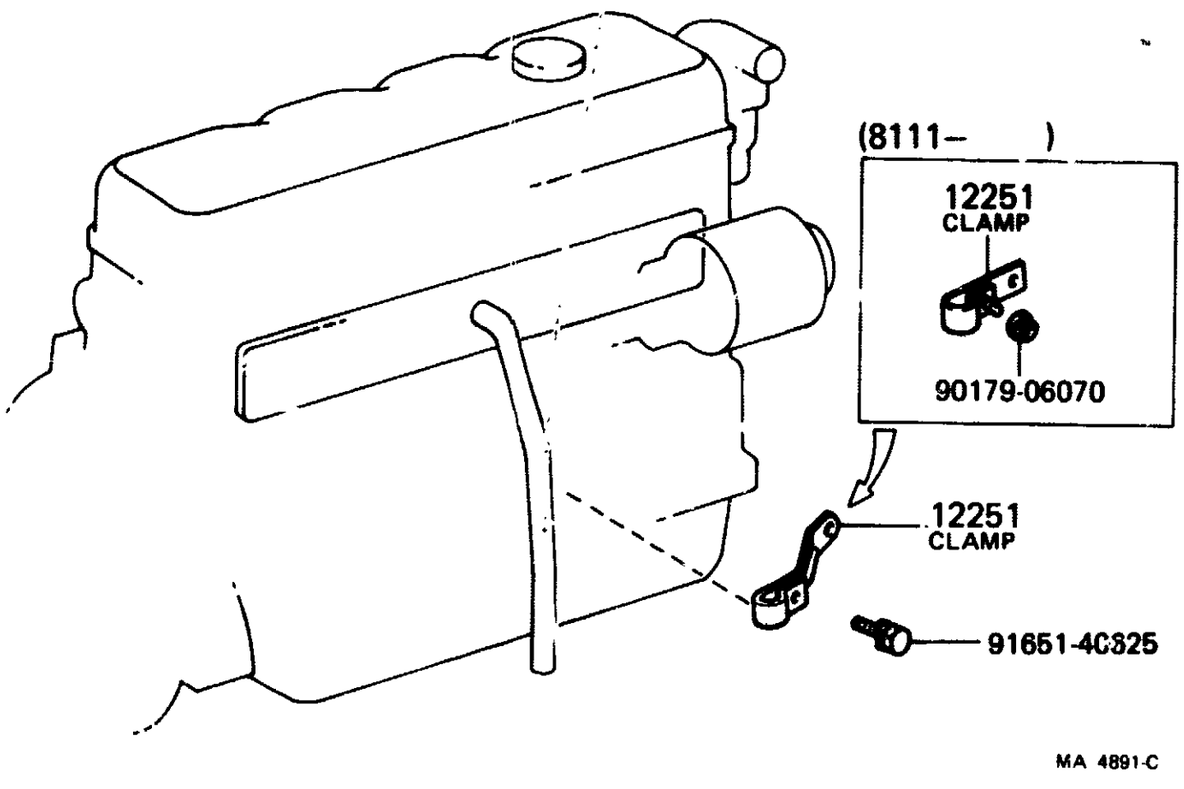

MA 4891-C

FIG. 12-01 VENTILATION HOSE

1-L2

GENUINE TOYOTA PARTS

(8510-)2H

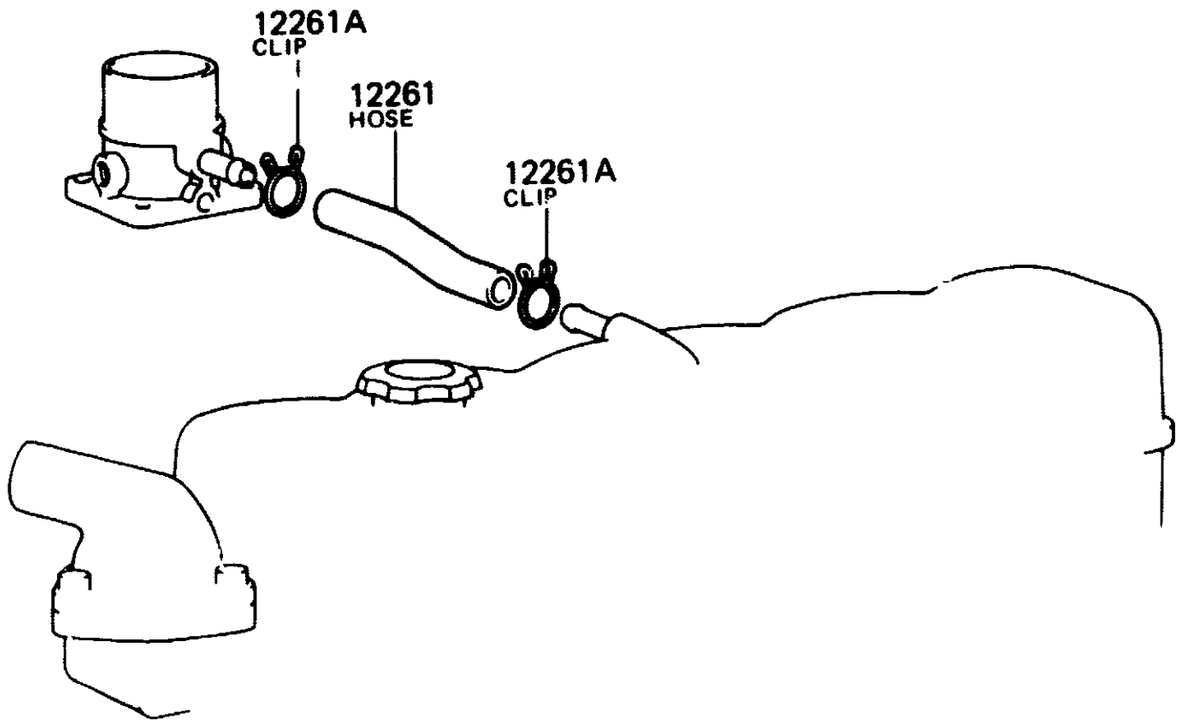

MA 4859

PROD.DATE	MODELS	DESCRIPTION	R/P	PART NUMBER	QTY	REV.REF.CODE FROM	REV.REF.CODE UP TO
FIG.	12-01 VENTILATION HOSE						
	12204	VALVE SUB-ASSY, VENTILATION					
8008-	2F..FJ60			12204-61010-	1	455	
	12204A	GROMMET (FOR VENTILATION SYSTEM)					
8008-8411	2F..FJ60			90480-18180-	1	455	
8411-	2F..FJ60			90480-18001-	1		
	12251	CLAMP, VENTILATION TUBE					
8008-8111	3B..BJ60			* 12251-56030- (12251-56031-) •(90179-06070-)	1	455	
8111-8409	3B..BJ60			12251-56031-	1		
8409-8510	3B..BJ60			12251-56040-	1		566
	12261	HOSE, VENTILATION					
8510-	2H..HJ60			12261-68010-	1	567	
	12261A	CLIP (FOR VENTILATION HOSE)					
8510-	2H..HJ60			90467-23002-	2	567	
	12262	HOSE, VENTILATION, NO.2					
8008-8110	2F..FJ60..CND			12261-61020-	1	455	458
8008-	2F..FJ60..USA			90910-05152-	1	455	
	12262A	CLIP (FOR VENTILATION HOSE NO.2)					
8008-8411	2F..FJ60			90467-18028-	2	455	
8411-	2F..FJ60			90467-15006-	2		
	12263	HOSE, VENTILATION, NO.3					
8008-	2F..FJ60			90910-06036-	1	455	
	12263A	CLIP (FOR VENTILATION HOSE)					
8008-	2F..FJ60			90467-24038-	2	455	
	12264	HOSE, VENTILATION, NO.4					
8008-	2F..FJ60			90445-17043-	1	455	

PROD.DATE	MODELS	DESCRIPTION	R/P	PART NUMBER	QTY	REV.REF.CODE FROM	REV.REF.CODE UP TO
	12264A CLIP (FOR VENTILATION HOSE)						
8008-8411	2F..FJ60			90467-18028-	2	455	
8411-	2F..FJ60			90467-15006-	2		

PROD.DATE	MODELS	DESCRIPTION	R/P	PART NUMBER	QTY	REV.REF.CODE FROM	REV.REF.CODE UP TO

FIG.13-01 CRANKSHAFT & PISTON

1-A3

MR4-11-0372

(8008-8410)2F

(8410-)2F

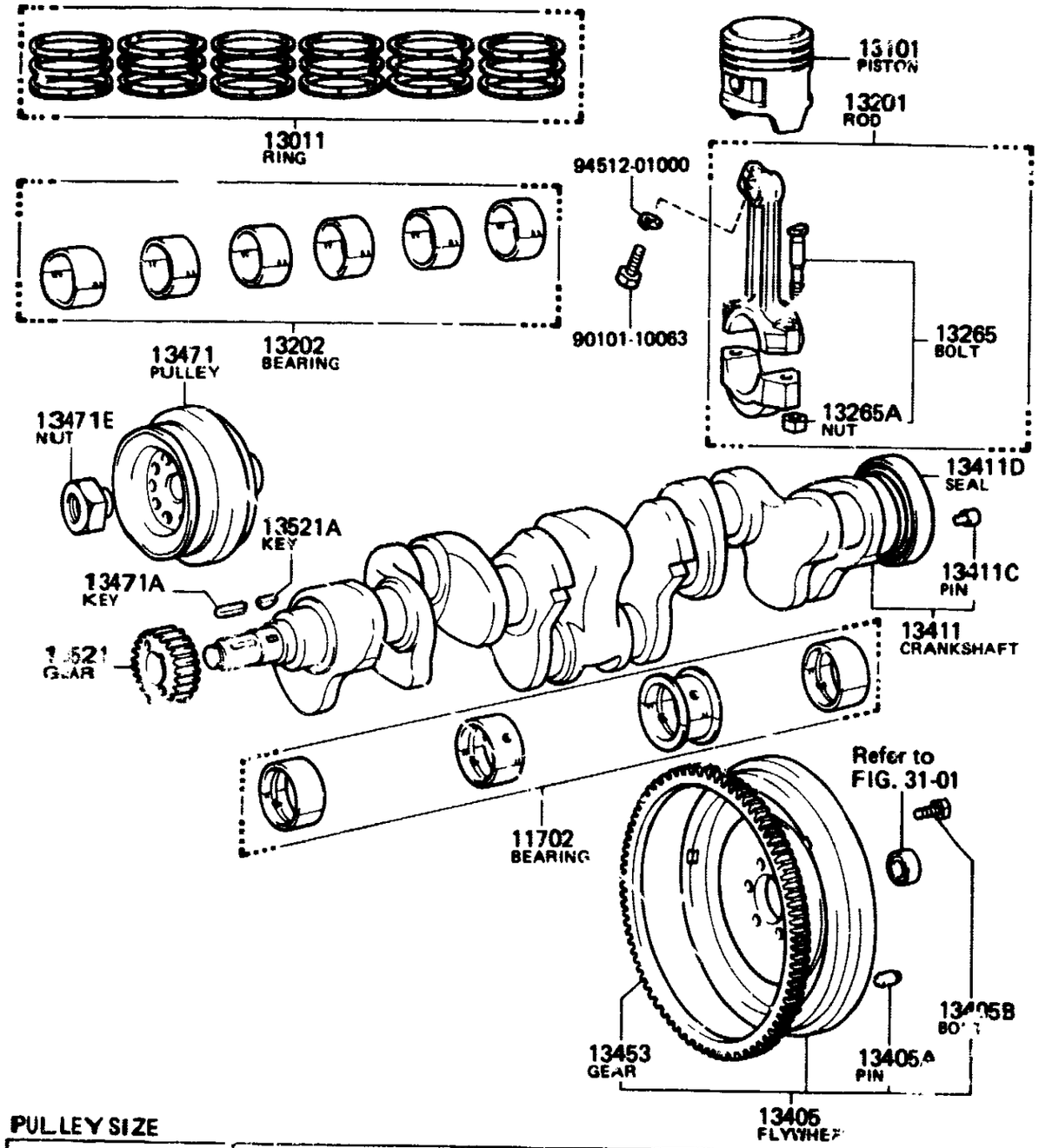

MA 4795 B

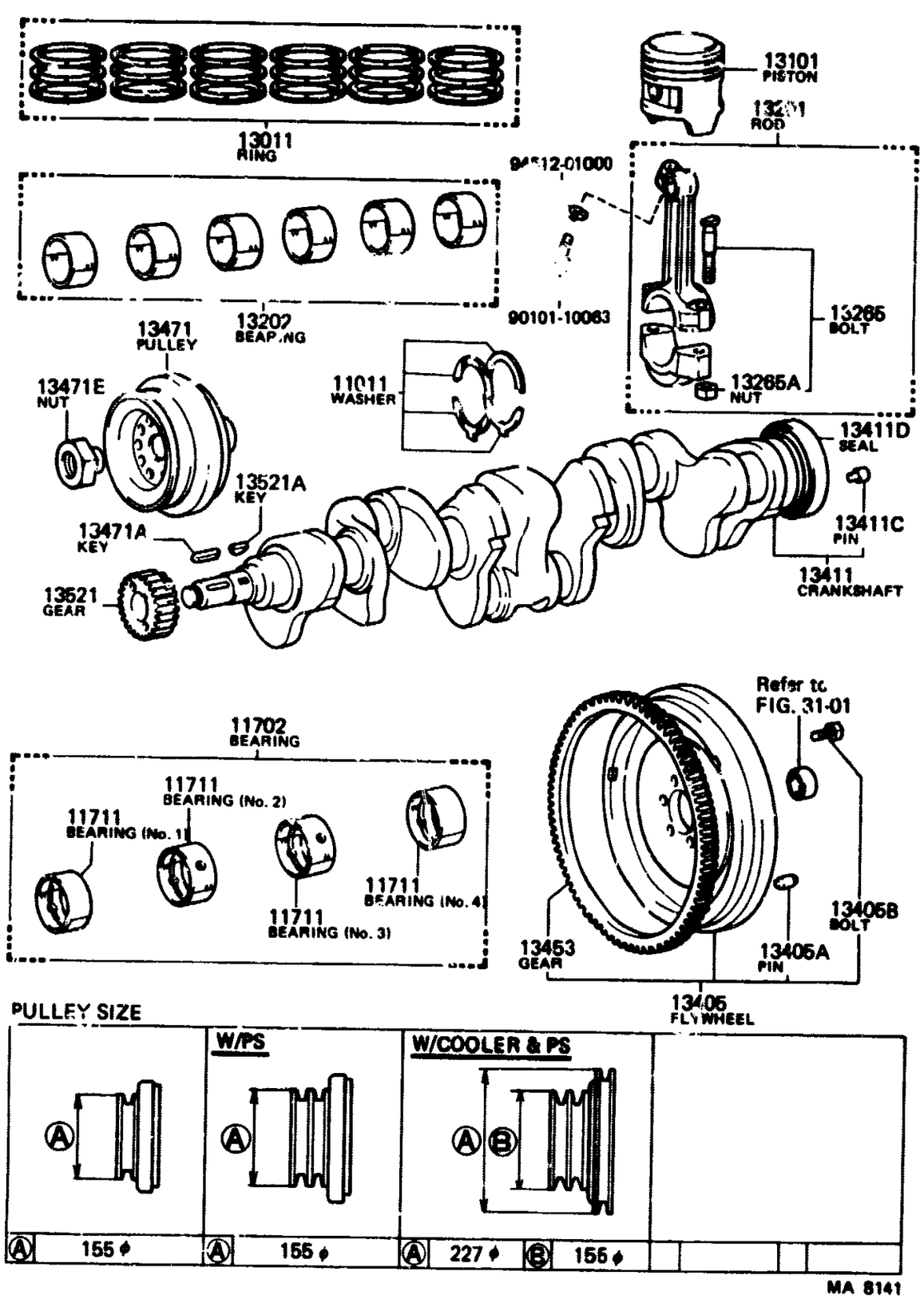

MA 8141

MA4795B

MA8141

FIG.13-01 CRANKSHAFT & PISTON

1-B3

MR4-11-0373

(8008-8510)3B

(8510-)2H

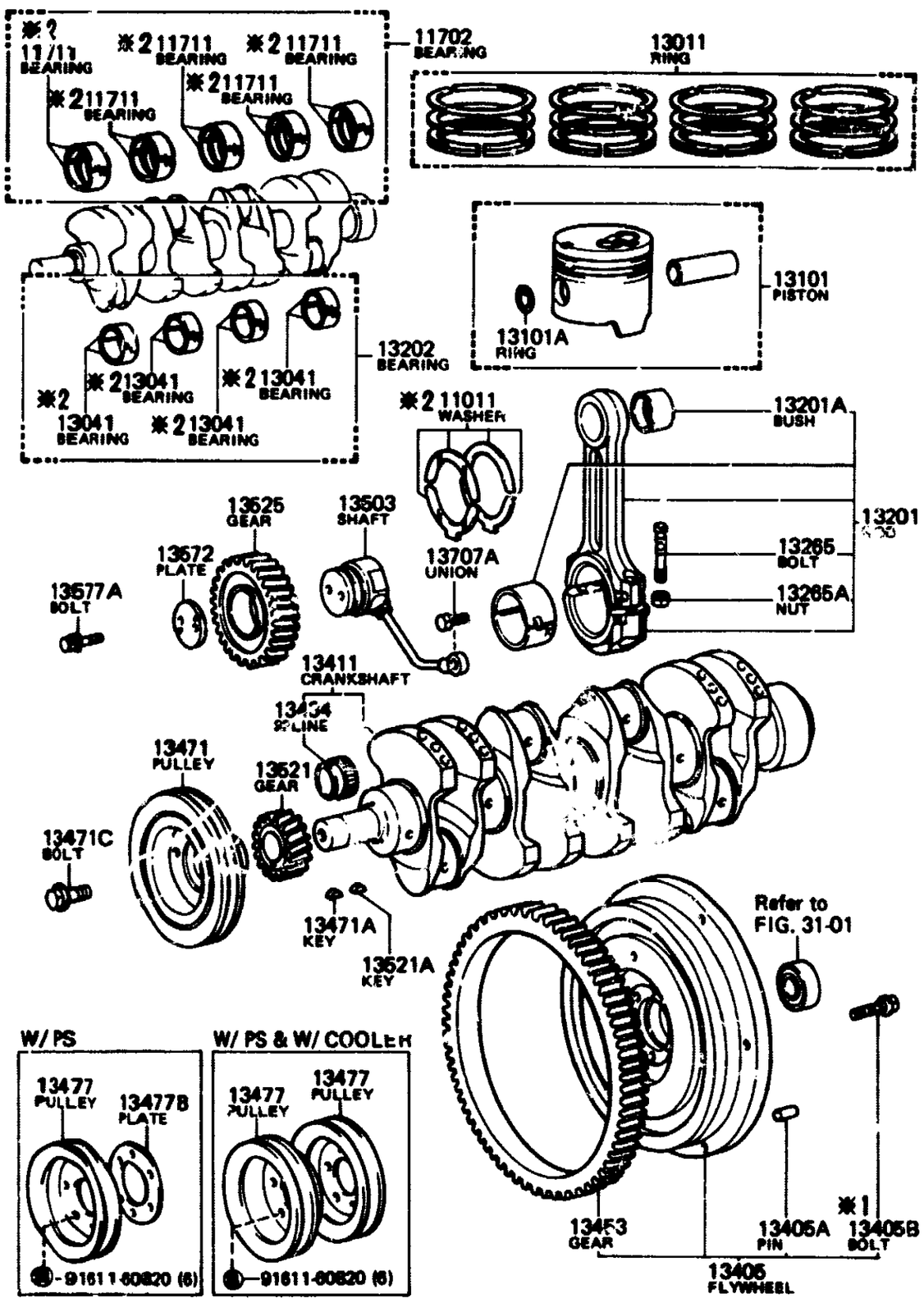

MA 5087-E

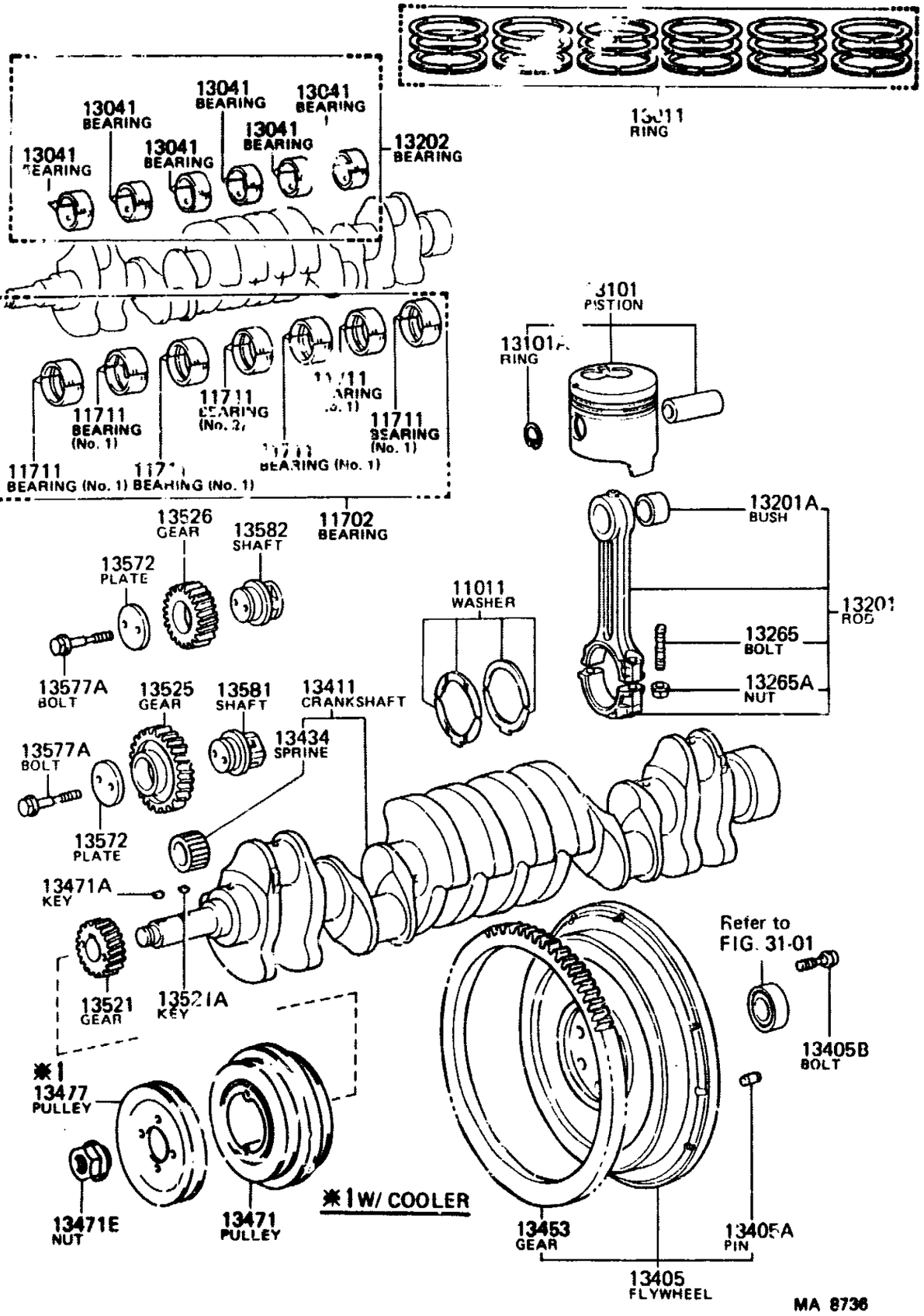

MA 8736

MA5087E

MA8736

	PROD.DATE	MODELS	DESCRIPTION	R/P	PART NUMBER	QTY	REV.REF.CODE FROM	REV.REF.CODE UP TO
	FIG•	13-01 CRANKSHAFT & PISTON						
		11011 WASHER SET, CRANKSHAFT THRUST						
	8410-	2F••FJ60	STD		11011-61010-	1		
	8410-	2F••FJ60	O/S 0•125		11012-61010-	1		
	8410-	2F••FJ60	O/S 0•250		11013-61010-	1		
	8510-	2H••HJ60	STD		11011-68020-	1	567	
C	8510-	2H••HJ60	O/S 0•125		11012-68020-	1	567	
C	8510-	2H••HJ60	O/S 0•250		11013-68020-	1	567	
	8409-8506	3B••BJ60	STD	#	11011-56010- (11011-56020-)	1		
	8409-8506	3B••BJ60	O/S 0•125		11012-56010-	1		
	8409-8506	3B••BJ60	O/S 0•250		11013-56010-	1		
	8506-8510	3B••BJ60	STD		11011-56020-	1		566
	8506-8510	3B••BJ60	O/S 0•125		11012-56020-	1		566
	8506-8510	3B••BJ60	O/S 0•250		11013-56020-	1		566
		11702 BEARING SET, CRANKSHAFT						
	8008-8410	2F••FJ60	STD		11702-60013-	1	455	
	8008-8410	2F••FJ60	U/S 0•05		11703-60013-	1	455	
	8008-8410	2F••FJ60	U/S 0•25		11704-60013-	1	455	
	8008-8410	2F••FJ60	U/S 0•50		11705-60013-	1	455	
	8410-	2F••FJ60	U/S 0•25		11704-61010-	1		
	8410-	2F••FJ60	U/S 0•50		11705-61010-	1		
	8510-	2H••HJ60	U/S 0•25		11704-68021-	1	567	
	8510-	2H••HJ60	U/S 0•50		11705-68021-	1	567	
	8510-	2H••HJ60	U/S 0•75		11706-68021-	1	567	
	8510-	2H••HJ60	U/S 1•00		11707-68021-	1	567	
	8008-8409	3B••BJ60	STD		11702-56010-	1	455	
	8008-8409	3B••BJ60	U/S 0•25		11704-56010-	1	455	
	8008-8409	3B••BJ60	U/S 0•50		11705-56010-	1	455	
	8008-8409	3B••BJ60	U/S 1•00		11707-56010-	1	455	
	8409-8510	3B••BJ60	U/S 0•25		11704-56020-	1		566
	8409-8510	3B••BJ60	U/S 0•50		11705-56020-	1		566

PROD.DATE	MODELS	DESCRIPTION	R/P	PART NUMBER	QTY	REV.REF.CODE FROM	REV.REF.CODE UP TO
	11702 CONTINUED BEARING SET, CRANKSHAFT						
8409-8510	3B••BJ60	U/S 1•00		11707-56020-	1		566
	11711 BEARING, CRANKSHAFT						
8410-	2F••FJ60	NO•2,MARK" 1"		11071-61010-01	1		
8410-	2F••FJ60	NO•2,MARK" 2"		11071-61010-02	1		
8410-	2F••FJ60	NO•2,MARK" 3"		11071-61010-03	1		
8410-	2F••FJ60	NO•2,MARK" 4"		11071-61010-04	1		
8410-	2F••FJ60	NO•2,MARK" 5"		11071-61010-05	1		
8410-	2F••FJ60	NO•3,MARK" 1"		11072-61010-01	1		
8410-	2F••FJ60	NO•3,MARK" 2"		11072-61010-02	1		
8410-	2F••FJ60	NO•3,MARK" 3"		11072-61010-03	1		
8410-	2F••FJ60	NO•3,MARK" 4"		11072-61010-04	1		
8410-	2F••FJ60	NO•3,MARK" 5"		11072-61010-05	1		
8410-	2F••FJ60	NO•4,MARK" 1"		11073-61010-01	1		
8410-	2F••FJ60	NO•4,MARK" 2"		11073-61010-02	1		
8410-	2F••FJ60	NO•4,MARK" 3"		11073-61010-03	1		
8410-	2F••FJ60	NO•4,MARK" 4"		11073-61010-04	1		
8410-	2F••FJ60	NO•4,MARK" 5"		11073-61010-05	1		
8410-	2F••FJ60	NO•1,MARK" 1"		11701-61010-01	1		
8410-	2F••FJ60	NO•1,MARK" 2"		11701-61010-02	1		
8410-	2F••FJ60	NO•1,MARK" 3"		11701-61010-03	1		
8410-	2F••FJ60	NO•1,MARK" 4"		11701-61010-04	1		

PROD.DATE	MODELS	DESCRIPTION	R/P	PART NUMBER	QTY	REV.REF.CODE FROM	REV.REF.CODE UP TO
	11711 BEARING, CRANKSHAFT						
	CONTINUED						
8410-	2F..FJ60	NO.1,MARK" 5"		11701-61010-05	1		
8510-	2H..HJ60	NO.2,MARK" 1"		11071-68020-01	1	567	
8510-	2H..HJ60	NO.2,MARK" 2"		11071-68020-02	1	567	
8510-	2H..HJ60	NO.1,MARK" 1"		11701-68020-01	6	567	
8510-	2H..HJ60	NO.1,MARK" 2"		11701-68020-02	6	567	
8409-8510	3B..BJ60	MARK" 1"		11701-56010-01	5		566
8409-8510	3B..BJ60	MARK" 2"		11701-56010-02	5		566
	13011 RING SET, PISTON						
8008-	2F..FJ60	STD		13011-61010-	1	455	
8008-	2F..FJ60	O/S 0.50		13013-61010-	1	455	
8008-	2F..FJ60	O/S 1.00		13015-61010-	1	455	
8008-	2F..FJ60	O/S 1.50		13017-61010-	1	455	
8510-	2H..HJ60	STD		13011-68020-	1	567	
8510-	2H..HJ60	O/S 0.50		13013-68020-	1	567	
8008-8409	3B..BJ60	STD		13011-58010-	1	455	
8409-8510	3B..BJ60	STD		13011-58011-	1		566
	13041 BEARING, CONNECTING ROD						
8510-	2H..HJ60	MARK" 1"		13041-68040-01	6	567	
8510-	2H..HJ60	MARK" 2"		13041-68040-02	6	567	
8409-8510	3B..BJ60	MARK" 1"		13041-58010-01	4		566
8409-8510	3B..BJ60	MARK" 2"		13041-58010-02	4		566
	13101 PISTON SUB-ASSY, W/PIN						
8008-	2F..FJ60	STD		13101-61011-	6	455	
8008-	2F..FJ60	O/S 0.50		13103-61011-	6	455	
8008-	2F..FJ60	O/S 1.00		13105-61011-	6	455	
8008-	2F..FJ60	O/S 1.50		13107-61011-	6	455	
8510-	2H..HJ60	STD		13101-68011-	6	567	

PROD.DATE	MODELS	DESCRIPTION	R/P	PART NUMBER	QTY	REV.REF.CODE FROM	REV.REF.CODE UP TO
	13101 PISTON SUB-ASSY, W/PIN						
	CONTINUED						
8510-	2H..HJ60	O/S 0.50		13103-68011-	6	567	
8008-8409	3B..BJ60	STD		13101-58011-	4	455	
8409-8510	3B..BJ60	STD		13101-58012-	4		566
	13101A RING, HOLE SNAP (FOR PISTON PIN)						
8510-	2H..HJ60			90521-31001-	12	567	
8008-8409	3B..BJ60			90521-36003-	8	455	
8409-8510	3B..BJ60			90521-34002-	8		566
	13201 ROD SUB-ASSY, CONNECTING						
8008-	2F..FJ60			13201-60011-	6	455	
8510-	2H..HJ60			13201-68010-	6	567	
8008-8409	3B..BJ60		#	13201-58010- (13201-59035-)	4	455	
8409-8510	3B..BJ60			13201-59035-	4		566
	13201A BUSH (FOR CONNECTING ROD SMALL END)						
8510-	2H..HJ60			90999-73087-	6	567	
8008-8510	3B..BJ60			90999-73088-	4	455	566
	13202 BEARING SET, CONNECTING ROD						
8008-	2F..FJ60	STD		13202-60011-	1	455	
8008-	2F..FJ60	U/S 0.05		13203-60011-	1	455	
8008-	2F..FJ60	U/S 0.25		13204-60011-	1	455	
8008-	2F..FJ60	U/S 0.50		13205-60011-	1	455	
8510-	2H..HJ60	U/S 0.25		13204-68040-	1	567	
8510-	2H..HJ60	U/S 0.50		13205-68040-	1	567	
8510-	2H..HJ60	U/S 0.75		13206-68040-	1	567	
8510-	2H..HJ60	U/S 1.00		13207-68040-	1	567	
8008-8409	3B..BJ60	STD		13202-58010-	1	455	
8008-8409	3B..BJ60	U/S 0.25		13204-58010-	1	455	
8008-8409	3B..BJ60	U/S 0.50		13205-58010-	1	455	
8008-8409	3B..BJ60	U/S 1.00		13207-58010-	1	455	
8409-8510	3B..BJ60	U/S 0.25		13204-58011-	1		566

PROD.DATE	MODELS	DESCRIPTION	R/P	PART NUMBER	QTY	REV.REF.CODE FROM	REV.REF.CODE UP TO
	13202 BEARING SET, CONNECTING ROD						
	CONTINUED						
8409–8510	3B••BJ60	U/S 0.50		13205-58011-	1		566
8409–8510	3B••BJ60	U/S 1.00		13207-58011-	1		566
	13265 BOLT, CONNECTING ROD						
8008–	2F••FJ60			13265-69015-	12	455	
8510–	2H••HJ60			13265-68010-	12	567	
8008–8510	3B••BJ60			13265-58010-	8	455	566
	13265A NUT, HEXAGON (FOR CONNECTING ROD BOLT)						
8008–	2F••FJ60			90170-10198-	12	455	
8510–	2H••HJ60			90179-12015-	12	567	
8008–8402	3B••BJ60		#	90170-12010- (90179-12044-)	8	455	
8402–8510	3B••BJ60			90179-12044-	8		566
	13405 FLYWHEEL SUB-ASSY						
8008–	2F••FJ60			13405-69015-	1	455	
8510–	2H••HJ60••MTM			13405-68011-	1	567	
8008–8406	3B••BJ60		#	13405-59055- (13405-56031-) •(90105-13004-)	1	455	
8406–8510	3B••BJ60			13405-56031-	1		566
	13405A PIN, STRAIGHT (FOR FLYWHEEL)						
8008–	3B,2H,2F••BJ60,HJ60, FJ60••MTM			90250-10192-	3	455	
	13405B BOLT, FLYWHEEL SET						
8008–8410	2F••FJ60		#	90913-01003- (90913-01013-)	6	455	
8410–8411	2F••FJ60		#	90913-01013- (90913-01014-)	6		
8411–	2F••FJ60			90913-01014-	6		
8510–	2H••HJ60••MTM			90105-12039-	6	567	
8008–8411	3B••BJ60			90105-13002-	6	455	514
8411–8510	3B••BJ60	※13-1.5PX 0-20		90105-13004-	6	515	566

PROD.DATE	MODELS	DESCRIPTION	R/P	PART NUMBER	QTY	REV.REF.CODE FROM	REV.REF.CODE UP TO
	13411 CRANKSHAFT						
8008–8210	2F••FJ60		#	13401-60015- (13401-61010-)	1	455	
8210–	2F••FJ60			13401-61010-	1		
8510–	2H••HJ60			13401-68011-	1	567	
8008–8409	3B••BJ60		#	13401-58010- (13401-58020-)	1	455	
8409–8510	3B••BJ60			13401-58020-	1		566
	13411C PIN, STRAIGHT (FOR CRANKSHAFT)						
8008–	2F••FJ60			90241-10017-	1	455	
	13411D SEAL, OIL (FOR CRANKSHAFT)						
8008–8410	2F••FJ60			90311-99065-	1	455	
8410–	2F••FJ60			90311-99001-	1		
	13434 SPLINE, OIL PUMP DRIVE						
8510–	2H••HJ60			13519-68010-	1	567	
8008–8510	3B••BJ60			13519-56010-	1		566
	13453 GEAR, FLYWHEEL RING						
8008–	2F••FJ60			13453-60010-	1	455	
8510–	2H••HJ60••MTM	N=108		13453-47010-	1	567	
8008–8510	3B••BJ60	N=110		13453-56020-	1	455	566
	13471 PULLEY, CRANKSHAFT						
8008–	2F••FJ60	W/PS,OD=155		13470-60120-	1	455	
8008–8110	2F••FJ60••CND	OD=155		13470-60031-	1	455	458
8008–	2F••FJ60••USA	W/COOLER & PS,OD=155 &227		13470-61010-	1	455	
8510–	2H••HJ60			13470-68020-	1	567	
8008–8110	3B••BJ60		#	13470-56100- (13470-56101-)	1	455	458
8110–8409	3B••BJ60		#	13470-56101- (13470-56170-)	1	459	
8409–8510	3B••BJ60			13470-56170-	1		566

* O—O P X O—O =
Outside diameter—Pitch x Bolt length—Thread length

GENUINE TOYOTA PARTS

PROD.DATE	MODELS	DESCRIPTION	R/P	PART NUMBER	QTY	REV.REF.CODE FROM	REV.REF.CODE UP TO
	13471A KEY, CRANKSHAFT (FOR CRANKSHAFT PULLEY SET)						
8008-	2F..FJ60			90281-07004-	1	455	
8510-	2H..HJ60			95161-10519-	1	567	
8008-8510	3B..BJ60			95161-10416-	1	455	566
	13471C BOLT (FOR CRANKSHAFT PULLEY SET)						
8008-8510	3B..BJ60			90105-16003-	1	455	566
	13471E NUT (FOR CRANKSHAFT PULLEY)						
8008-8504	2F..FJ60			90179-22004-	1	455	554
8504-	2F..FJ60			90179-22009-	1	555	
8510-	2H..HJ60			90179-22062-	1	567	
	13477 PULLEY, CRANKSHAFT, NO.2						
8510-	2H..HJ60	W/COOLER		88452-60011-	1	567	
8210-8510	3B..BJ60	NO.2,W/PS		13477-60030-	1	467	566
8411-8510	3B..BJ60	NO.1,W/COOLER		88451-25020-	1	515	566
	13477B PLATE, CRANKSHAFT PULLEY, NO.2						
8210-8510	3B..BJ60	W/PS		13477-60010-	1	467	566
	13503 SHAFT SUB-ASSY, IDLE GEAR						
8008-8409	3B..BJ60			13504-56020-	1	455	
8409-8510	3B..BJ60			13504-56030-	1		566
	13521 GEAR OR SPROCKET, CRANKSHAFT TIMING						
8008-	2F..FJ60			13521-60010-	1	455	
8510-	2H..HJ60			13521-68010-	1	567	
8008-8409	3B..BJ60			13521-56020-	1	455	
8409-8510	3B..BJ60			13521-56030-	1		566
	13521A KEY (FOR CRANKSHAFT TIMING GEAR)						
C 8008-8609	2F..FJ60			# 90280-05010- (95161-10519-)	1	455	
C 8609-	2F..FJ60			95161-10519-	1		
8008-	3B,2H..BJ60,HJ60				1	455	

PROD.DATE	MODELS	DESCRIPTION	R/P	PART NUMBER	QTY	REV.REF.CODE FROM	REV.REF.CODE UP TO
	13525 GEAR, IDLE, NO.1						
8510-	2H..HJ60	N=51		13525-68010-	1	567	
8008-8409	3B..BJ60			13525-56010-	1	455	
8409-8510	3B..BJ60			13508-56010-	1		566
	13526 GEAR, IDLE, NO.2						
8510-	2H..HJ60	N=37		13526-68010-	1	567	
	13572 PLATE, IDLE GEAR THRUST						
8510-	2H..HJ60			13572-68010-	2	567	
8008-8409	3B..BJ60			# 13572-56010- (13572-56020-)	1	455	
8409-8510	3B..BJ60			13572-56020-	1		566
	13577A BOLT, HEXAGON (FOR IDLE GEAR BOLT LOCK)						
8510-	2H..HJ60			90105-10036-	4	567	
8008-8510	3B..BJ60			90119-10208-	2	455	566
	13581 SHAFT, IDLE GEAR, NO.1						
8510-	2H..HJ60			13581-68010-	1	567	
	13582 SHAFT, IDLE GEAR, NO.2						
8510-	2H..HJ60			13582-68010-	1	567	
	13707A UNION (FOR OIL PIPE, NO.1)						
8008-8510	3B..BJ60			90044-01010-	1	455	566

FIG•13-02 CAMSHAFT & VALVE

1-G3

MR4-11-0374

(8008-)2F

(8008-8510)3B

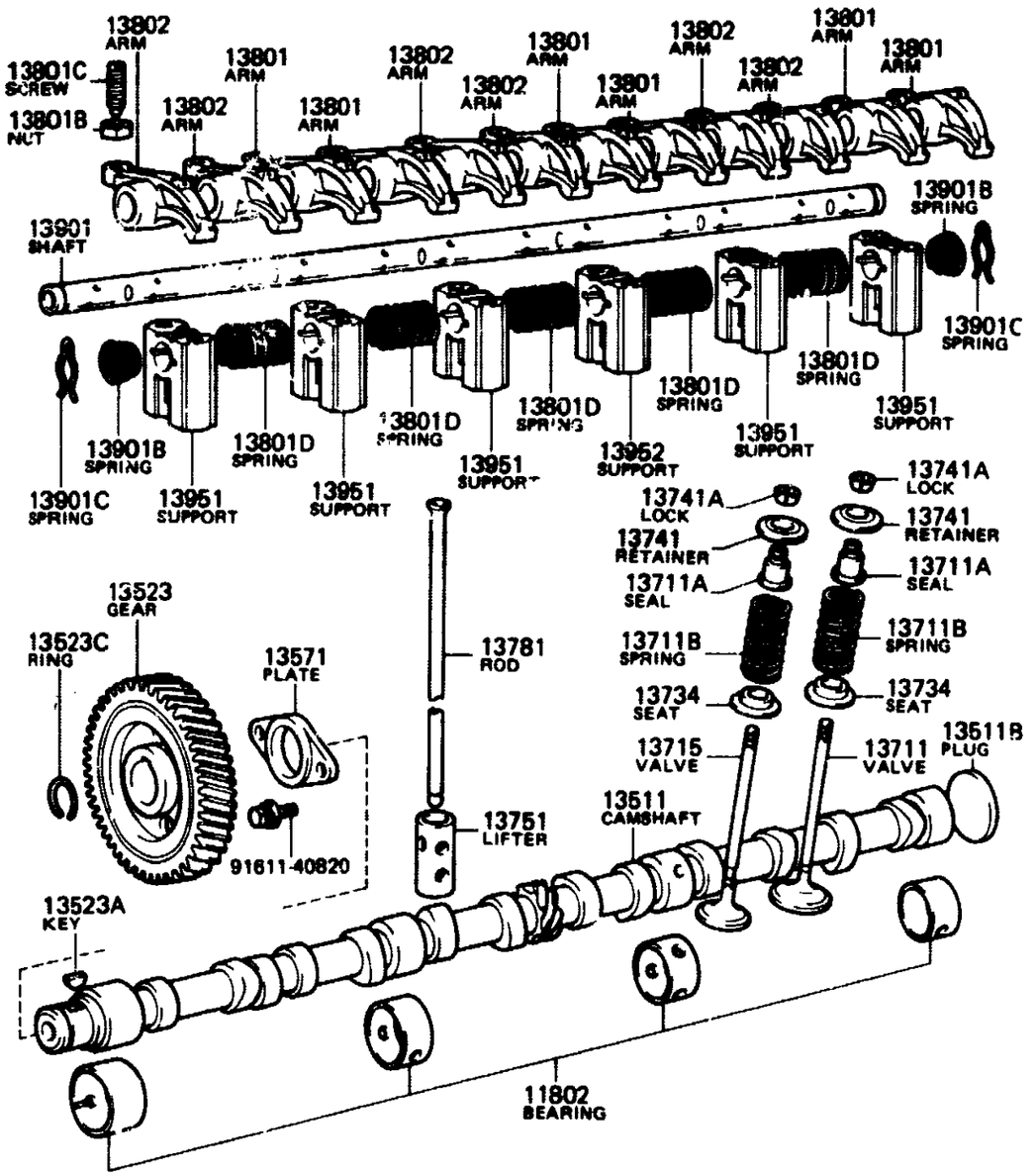

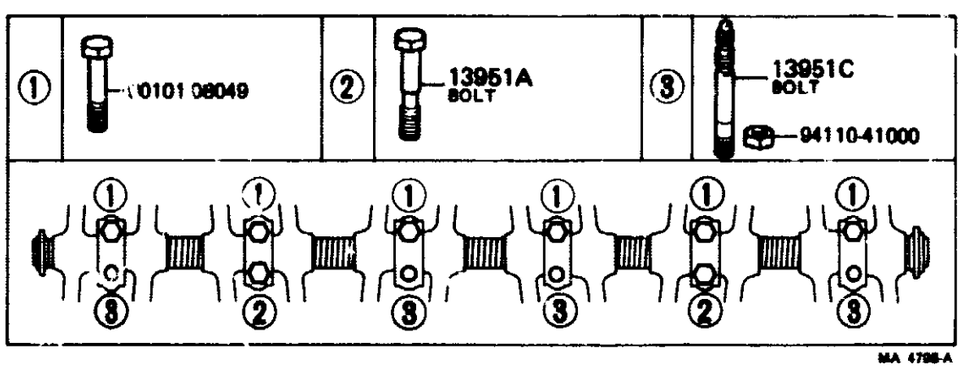

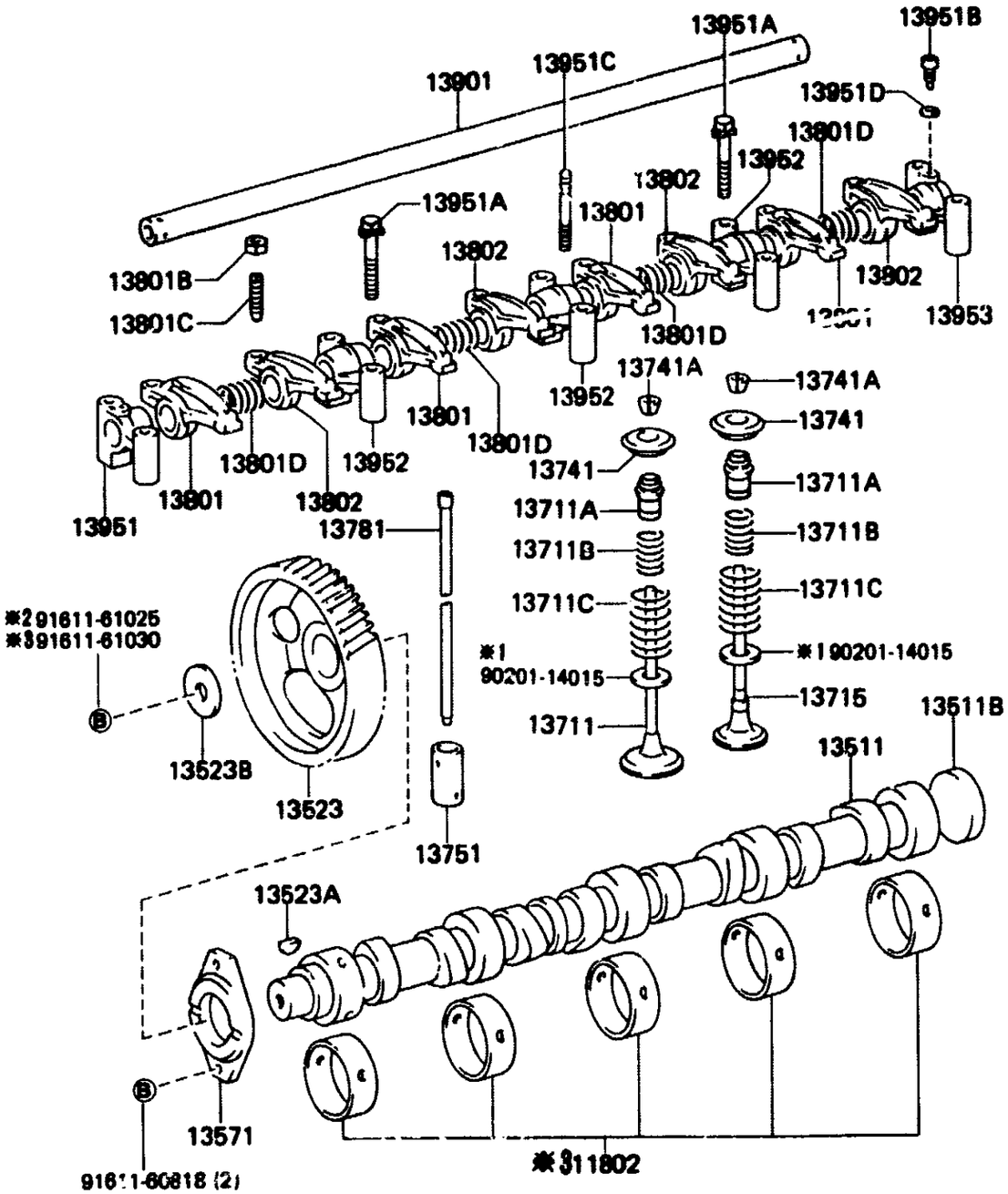

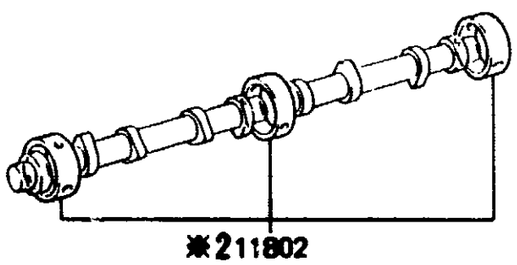

※1 (8408-)
※2 (-8408)
※3 (8409-)

MA 8087

(8510-)2H

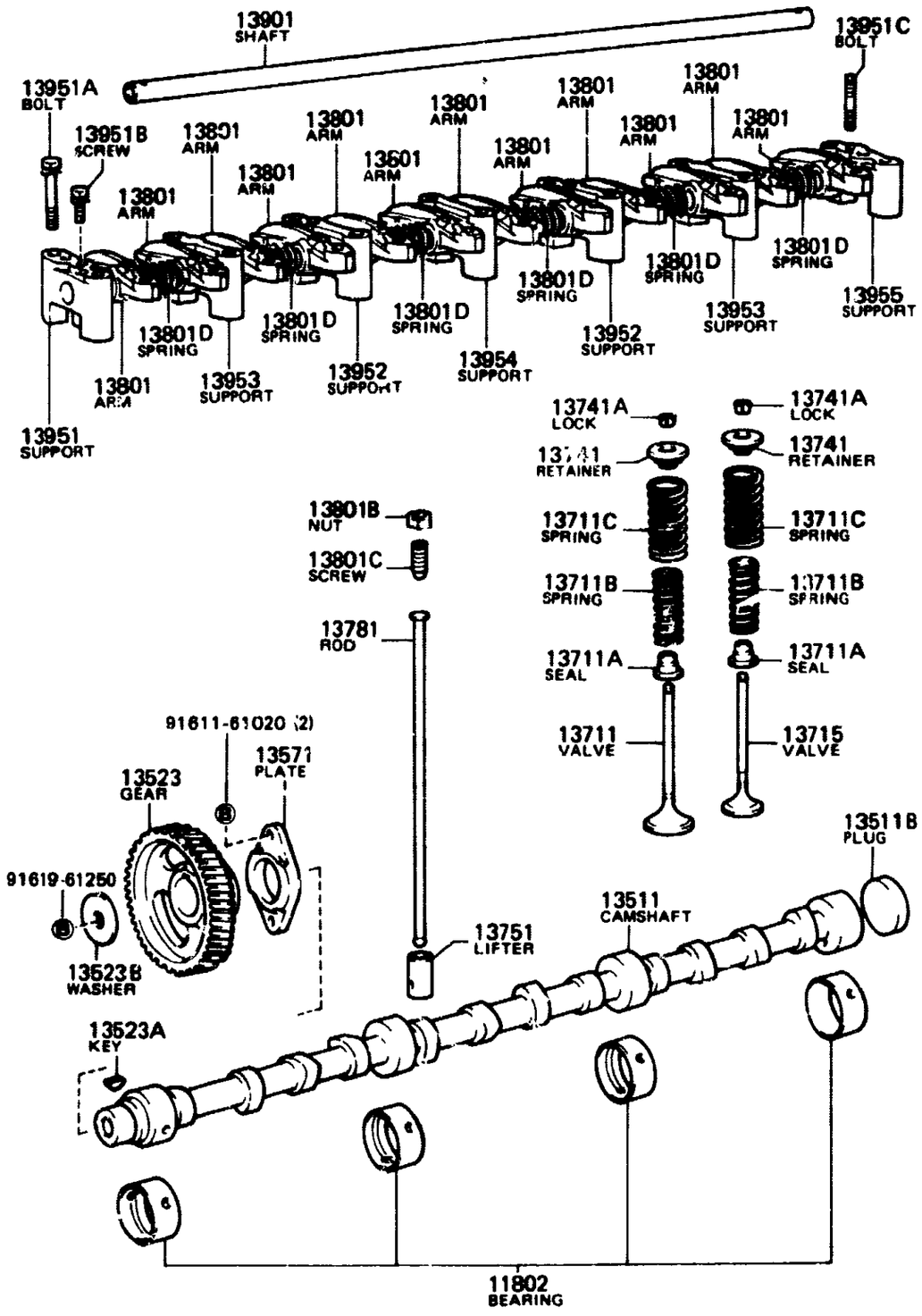

MA4861-C

GENUINE TOYOTA PARTS

	PROD.DATE	MODELS	DESCRIPTION	R/P	PART NUMBER	QTY	REV.REF.CODE FROM	REV.REF.CODE UP TO
	FIG.	13-02 CAMSHAFT & VALVE						
		11802 BEARING SET, CAMSHAFT						
	8008-8410	2F••FJ60	STD		11802-60011-	1	455	
	8008-8410	2F••FJ60	U/S 0.25		11804-60021-	1	455	
	8008-8410	2F••FJ60	U/S 0.50		11805-60021-	1	455	
	8410-	2F••FJ60	STD		11802-61010-	1		
	8410-	2F••FJ60	U/S 0.25		11804-61010-	1		
	8410-	2F••FJ60	U/S 0.50		11805-61010-	1		
	8510-	2H••HJ60	STD		11802-68011-	1	567	
	8510-	2H••HJ60	U/S 0.125		11803-68011-	1	567	
	8510-	2H••HJ60	U/S 0.250		11804-68011-	1	567	
	8008-8409	3B••BJ60	STD		11802-56011-	1	455	
	8409-8510	3B••BJ60	STD		11802-56020-	1		566
		13511 CAMSHAFT						
	8008-	2F••FJ60			13511-60060-	1	455	
	8510-	2H••HJ60			13511-68010-	1	567	
	8J08-8409	3B••BJ60			13511-56010-	1	455	
	8409-8510	3B••BJ60			13511-56030-	1		566
		13511B PLUG, EXPANSION (FOR CAMSHAFT)						
	8008-	2F••FJ60			90331-48010-	1	455	
	8510-	2H••HJ60	OD=55		90331-55001-	1	567	
	8008-8409	3B••BJ60	OD=51		90331-51032-	1	455	
	8409-8510	3B••BJ60	OD=56		90331-56001-	1		566
		13523 GEAR OR SPROCKET, CAMSHAFT TIMING						
	8008-	2F••FJ60			13523-60030-	1	455	
	8510-	2H••HJ60			13523-68010-	1	567	
	8008-8409	3B••BJ60	N=44		13523-56030-	1	455	
	8409-8510	3B••BJ60			13523-56040-	1		566
		13523A KEY, WOODRUFF (FOR TIMING GEAR)						
C	8008-8609	2F••FJ60			# 90280-05010- (95161-10519-	1	455	

	PROD.DATE	MODELS	DESCRIPTION	R/P	PART NUMBER	QTY	REV.REF.CODE FROM	REV.REF.CODE UP TO
		13523A KEY, WOODRUFF (FOR TIMING GEAR) CONTINUED						
C	8609-	2F••FJ60			95161-10519-	1		
	8008-	3B,2H••BJ60,HJ60				1	455	
		13523B WASHER, PLATE (FOR TIMING GEAR)						
	8510-	2H••HJ60			90201-12006-	1	567	
	8008-8510	3B••BJ60			90201-10227-	1	455	566
		13523C RING, SNAP CAMSHAFT (FOR TIMING GEAR)						
	8008-	2F••FJ60			90520-29051-	1	455	
		13571 PLATE, CAMSHAFT THRUST						
	8008-8010	2F••FJ60			# 13571-60010- (13571-61010-)	1	455	
	8010-	2F••FJ60			13571-61010-	1		
	8510-	2H••HJ60			13571-68010-	1	567	
	8008-8409	3B••BJ60			13571-56010-	1	455	
	8409-8510	3B••BJ60			13571-56020-	1		566
		13711 VALVE, INTAKE						
	8008-	2F••FJ60			13711-60021-	6	455	
	8510-	2H••HJ60			13711-68010-	6	567	
	8008-8510	3B••BJ60			13711-58010-	4	455	566
		13711A SEAL OR RING, O (FOR VALVE STEM OIL)						
	8008-	2F••FJ60			90913-02048-	12	455	
	8510-	2H••HJ60			90913-02050-	12	567	
	8008-8510	3B••BJ60			90913-02051-	8	455	566
		13711B SPRING, COMPRESSION (FOR INNER)						
	8008-	2F••FJ60			90501-45342-	12	455	
	8510-	2H••HJ60			90501-26017-	12	567	
	8008-8510	3B••BJ60			90501-23018-	8	455	566
		13711C SPRING, COMPRESSION (FOR OUTER)						
	8510-	2H••HJ60			90501-42006-	12	567	

PROD.DATE	MODELS	DESCRIPTION	R/P	PART NUMBER	QTY	REV.REF.CODE FROM	REV.REF.CODE UP TO
	13711C SPRING, COMPRESSION (FOR OUTER) CONTINUED						
8008-8510	3B••BJ60			90501-47003-	8	455	566
	13715 VALVE, EXHAUST						
8411-	2F••FJ60			13715-61030-	6		
8008-8110	2F••FJ60••CND			13715-61010-	6	455	458
8008-8411	2F••FJ60••USA			# 13715-60032- (13715-61030-)	6	455	
8510-	2H••HJ60			13715-68010-	6	567	
8008-8410	3B••BJ60			# 13715-58010- (13715-58011-)	4	455	
8410-8510	3B••BJ60			13715-58011-	4		566
	13734 SEAT, VALVE SPRING						
8008-	2F••FJ60			13734-60030-	12	455	
	13741 RETAINER, VALVE SPRING						
8008-	2F••FJ60			13741-60030-	12	455	
8510-	2H••HJ60			13741-68010-	12	567	
8008-8409	3B••BJ60			13741-56020-	8	455	
8409-8510	3B••BJ60			13741-56021-	8		566
	13741A LOCK, VALVE SPRING RETAINER						
8008-	2F••FJ60			90913-03012-	24	455	
8510-	2H••HJ60			90913-03018-	24	567	
8008-8510	3B••BJ60			90913-03019-	16	455	566
	13751 LIFTER, VALVE						
8008-	2F••FJ60	STD		13751-61010-	12	455	
8008-	2F••FJ60	O/S 0.05		13755-61010-	12	455	
8510-	2H••HJ60	STD		13751-47011-	12	567	
8510-	2H••HJ60	O/S 0.05		13755-47011-	12	567	
8008-8305	3B••BJ60			# 13751-56011- (13751-56012-)	8	455	
8305-8409	3B••BJ60			13751-56012-	8		
8409-8510	3B••BJ60			13751-56020-	8		566

PROD.DATE	MODELS	DESCRIPTION	R/P	PART NUMBER	QTY	REV.REF.CODE FROM	REV.REF.CODE UP TO
	13781 ROD, VALVE PUSH						
8008-	2F..FJ60			13781-61010-	12	455	
8510-	2H..HJ60			13781-68010-	12	567	
8008-8409	3B..BJ60			13781-31011-	8	455	
8409-8510	3B..BJ60			13781-56010-	8		566
	13801 ARM SUB-ASSY, VALVE ROCKER, NO.1						
8008-8410	2F..FJ60			13811-61021-	6	455	
8410-	2F..FJ60			13811-61030-	6		
8510-	2H..HJ60			13811-68011-	12	567	
8008-8409	3B..BJ60			13811-56020-	4	455	
8409-8510	3B..BJ60			13811-56030-	4		566
	13801B NUT, HEXAGON (FOR VALVE ADJUSTING)						
8008-8410	2F..FJ60			90170-10014-	12	455	
8410-	2H,2F..HJ60,FJ60			90170-08005-	12		
8008-8409	3B..BJ60			90170-10074-	8	455	
8409-8510	3B..BJ60			90041-70001-	8		566
	13801C SCREW, VALVE ADJUSTING						
8409-8410	2F..FJ60			90913-05007-	12		
8410-	2H,2F..HJ60,FJ60			90913-05020-	12		
8409-8510	3B..BJ60			90913-05021-	8		566
8008-8409	3B,2F..BJ60,FJ60			90913-05007-	12	455	
	13801D SPRING, COMPRESSION (FOR ROCKER ARM)						
8410-	2F..FJ60			90501-14087-	5		
8008-8410	3B,2F..BJ60,FJ60			90501-16163-	5	455	
8410-	3B,2H..BJ60,HJ60				6		
	13802 ARM SUB-ASSY, VALVE ROCKER, NO.2						
8008-8410	2F..FJ60			13812-61021-	6	455	
8410-	2F..FJ60			13812-61030-	6		
8008-8409	3B..BJ60			13812-56020-	4	455	
8409-8510	3B..BJ60			13812-56030-	4		566

PROD.DATE	MODELS	DESCRIPTION	R/P	PART NUMBER	QTY	REV.REF.CODE FROM	REV.REF.CODE UP TO
	13901 SHAFT SUB-ASSY, VALVE ROCKER, NO.1						
8008-8410	2F..FJ60			# 13901-61011- (13901-61020-)	1	455	
8410-	2F..FJ60			13901-61020-	1		
8510-	2H..HJ60			13901-68010-	1	567	
8008-8510	3B..BJ60			13901-56020-	1	455	566
	13901B SPRING, CONICAL (FOR VALVE ROCKER SHAFT)						
8008-	2F..FJ60			90502-16004-	2	455	
	13901C SPRING, RETAINER (FOR VALVE ROCKER SHAFT)						
8008-	2F..FJ60			90524-15008-	2	455	
	13951 SUPPORT, VALVE ROCKER, NO.1						
8008-	2F..FJ60			# 13951-61012- (13952-61012-)	5	455	
8510-	2H..HJ60			13951-68010-	1	567	
8008-8510	3B..BJ60			13951-56010-	1	455	566
	13951A BOLT (FOR ROCKER SUPPORT SET)						
8509-8510	2F..FJ60			90910-01006-	1		
8008-	2F..FJ60				2	455	
8509-	2F..FJ60			90910-01012-	1		
8510-	2H..HJ60			*8-1.25PX60-30 91611-60860-	14	567	
8008-8510	3B..BJ60			*8-1.25PX55-30 91611-60855-	5	455	566
8008-8510	3B..BJ60			*8-1.25PX65-30 91611-60865-	5	455	566
	13951B SCREW OR BOLT (FOR VALVE ROCKER SHAFT LOCK)						
8510-	2H..HJ60			*8-1.25PX16-in 91611-60816-	2	567	
8008-8409	3B..BJ60			# 90149-60001- (90109-06014-)	2	455	
8409-8510	3B..BJ60			13958-56010-	2		566
	13951C BOLT, STUD (FOR ROCKER SUPPORT)						
8008-	2F..FJ60			13994-61010-	4	455	

* O—O PX O—O =
Outside diameter—Pitch x Bolt length—Thread length

PROD.DATE	MODELS	DESCRIPTION	R/P	PART NUMBER	QTY	REV.REF.CODE FROM	REV.REF.CODE UP TO
	13951C	BOLT, STUD (FOR ROCKER SUPPORT) CONTINUED					
8510-	2H..HJ60	L=38, S=10& 16		92112-60828-	4	567	
8008-8510	3B..BJ60	L=84, S=9&2 9		90116-08123-	4	455	566
	13951D	WASHER, SEAL (FOR HEAD COVER SET)					
8008-8510	3B..BJ60			90201-06177-	2	455	566
	13952	SUPPORT, VALVE ROCKER, NO.2					
8008-	2F..FJ60			13952-61012-	1	455	
8510-	2H..HJ60			13952-6801 --	2	567	
8008-8510	3B..BJ60			13952-56010-	3	455	566
	13953	SUPPORT, VALVE ROCKER, NO.3					
8510-	2H..HJ60			13953-68010-	2	567	
8008-8510	3B..BJ60			13953-56010-	1	455	566
	13954	SUPPORT, VALVE ROCKER, NO.4					
8510-	2H..HJ60			13954-68010-	1	567	
	13955	SUPPORT, VALVE ROCKER, NO.5					
8510-	2H..HJ60			13955-68010-	1	567	

PROD.DATE	MODELS	DESCRIPTION	R/P	PART NUMBER	QTY	REV.REF.CODE FROM	REV.REF.CODE UP TO

(8008-)2F

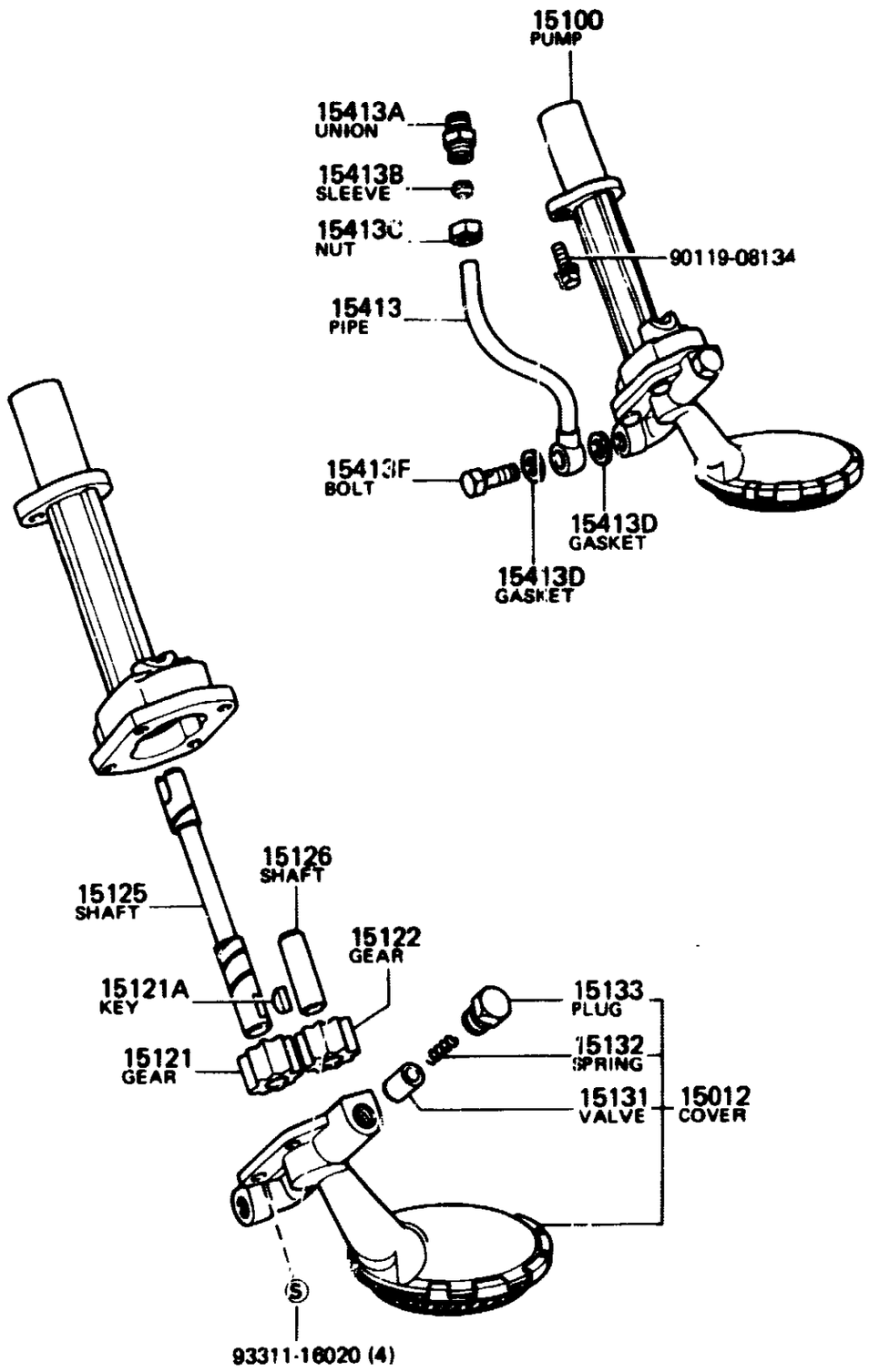

MA 2324-A

(8008-8510)3B

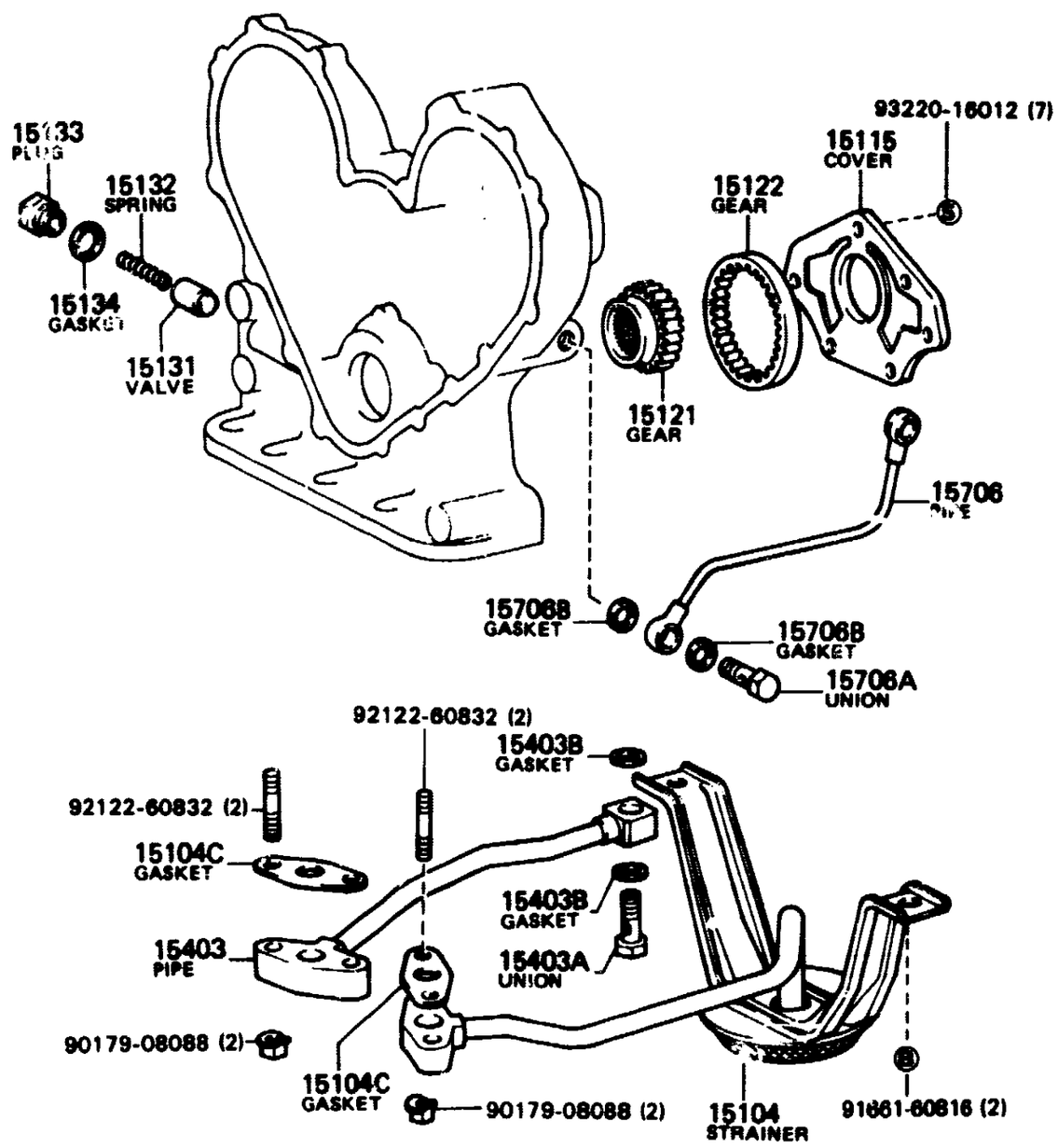

MA 4682-E

FIG.15-01 OIL PUMP

(8510-)2H

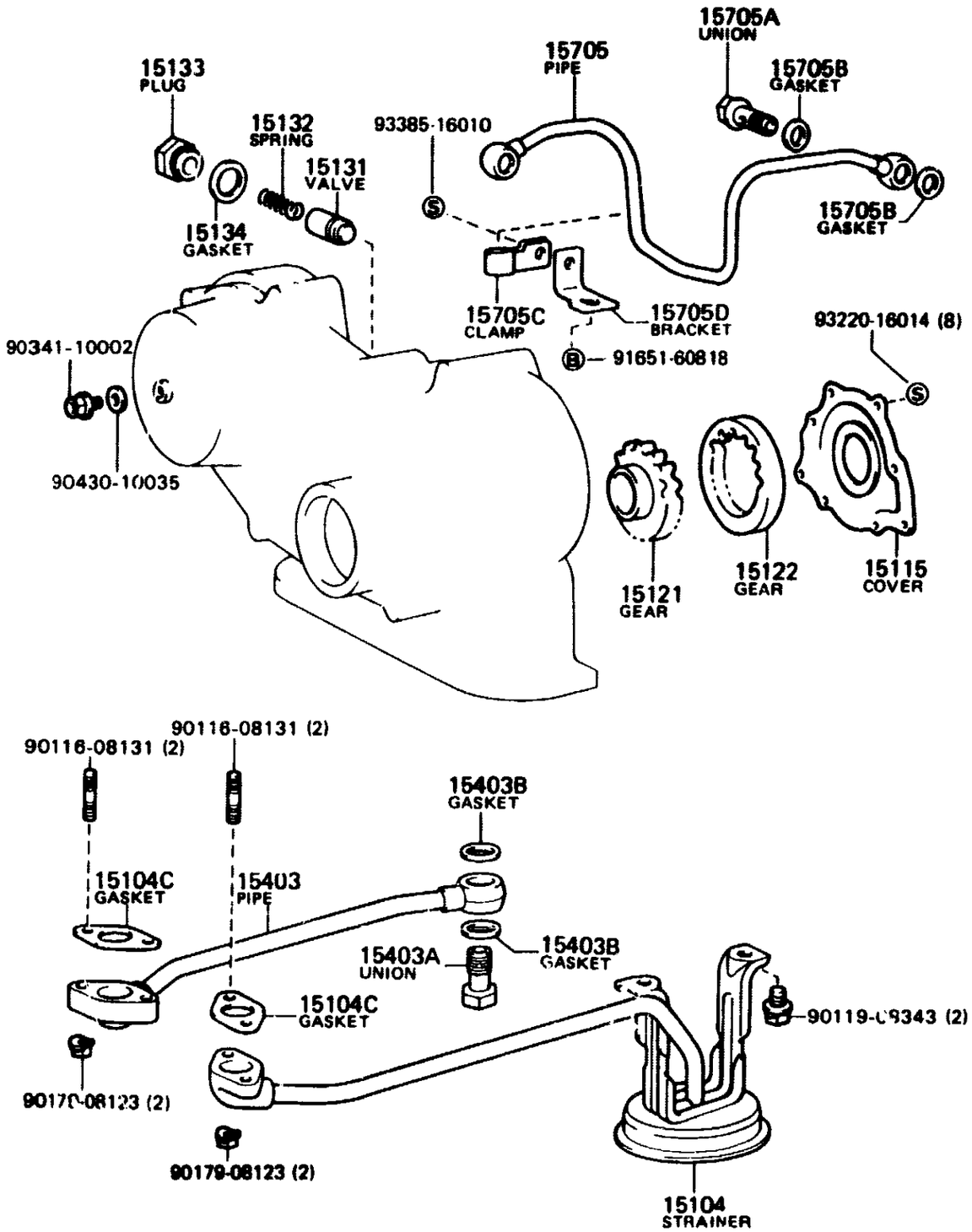

MA 8737-A

GENUINE TOYOTA PARTS

PROD.DATE	MODELS	DESCRIPTION	R/P	PART NUMBER	QTY	REV.REF.CODE FROM	REV.REF.CODE UP TO
FIG.	15-01 OIL PUMP						
	15012	COVER SUB-ASSY, OIL PUMP					
8008-	2F..FJ60			15012-60014-	1	455	
	15100	PUMP ASSY, OIL					
8008-8411	2F..FJ60		#	15100-61010-	1	455	514
				(15100-61011-)			
8411-	2F..FJ60			15100-61011-	1	515	
	15104	STRAINER SUB-ASSY, OIL					
8510-	2H..HJ60			15104-68012-	1	567	
8008-8409	3B..BJ60		#	15104-56040-	1	455	
				(15104-56050-)			
				(15193-56020-)			
8409-8510	3B..BJ60			15104-56050-	1		566
	15104C	GASKET (FOR OIL STRAINER)					
8510-	2H..HJ60			15149-68010-	2	567	
8008-8109	3B..BJ60		#	15422-56020-	2	455	
				(15193-56010-)			
8109-8409	3B..BJ60			15193-56010-	2		
8409-8510	3B..BJ60			15193-56020-	2		566
	15115	COVER, OIL PUMP					
8510-	2H..HJ60			15115-68020-	1	567	
8008-8510	3B..BJ60			15115-56030-	1	455	566
	15121	GEAR, OIL PUMP DRIVE					
8008-8411	2F..FJ60			15121-88111-	1	455	514
8411-	2F..FJ60			15121-61011-	1	515	
8510-	2H..HJ60			15121-68020-	1	567	
8008-8510	3B..BJ60			15121-56030-	1	455	566
	15121A	KEY, OIL PUMP DRIVE SHAFT					
8008-	2F..FJ60			90280-03009-	1	455	
	15122	GEAR, OIL PUMP DRIVEN					
8008-8411	2F..FJ60			15122-79410-	1	455	514

PROD.DATE	MODELS	DESCRIPTION	R/P	PART NUMBER	QTY	REV.REF.CODE FROM	REV.REF.CODE UP TO
	15122 GEAR, OIL PUMP DRIVEN CONTINUED						
8411-	2F..FJ60			15122-61011-	1	515	
8510-	2H..HJ60			15122-68020-	1	567	
8008-8510	3B..BJ60			15122-56030-	1	455	566
	15125 SHAFT, OIL PUMP						
8008-	2F..FJ60			15125-60013-	1	455	
	15126 SHAFT, OIL PUMP DRIVEN						
8008-	2F..FJ60			15126-60013-	1	455	
	15131 VALVE, OIL PUMP RELIEF						
8510-	2H..HJ60			15131-22010-	1	567	
8008-	3B,2F..BJ60,FJ60			15131-24010-	1	455	
	15132 SPRING, OIL PUMP RELIEF VALVE						
8008-	2F..FJ60			15132-40010-	1	455	
8008-	3B,2H..BJ60,HJ60			15132-76011-	1	455	
	15133 PLUG, OIL PUMP RELIEF VALVE						
8008-	2F..FJ60			15133-24010-	1	455	
8008-	3B,2H..BJ60,HJ60			15133-20010-	1	455	
	15134 GASKET, OIL PUMP RELIEF VALVE						
8008-	3B,2H..BJ60,HJ60			15134-20010-	1	455	
	15403 PIPE SUB-ASSY, OIL PUMP OUTLET						
8510-	2H..HJ60			15403-68010-	1	567	
8008-8409	3B..BJ60			15403-56040-	1	455	
8409-8510	3B..BJ60			15403-56041-	1		566
	15403A UNION (FOR OIL PUMP OUTLET PIPE)						
8510-	2H..HJ60			90401-18007-	1	567	
8008-8510	3B..BJ60			90401-18002-	1	455	566
	15403B GASKET (FOR OIL PUMP OUTLET PIPE)						
8008-	3B,2H..BJ60,HJ60			90430-18012-	2	455	

PROD.DATE	MODELS	DESCRIPTION	R/P	PART NUMBER	QTY	REV.REF.CODE FROM	REV.REF.CODE UP TO
	15413 PIPE, OIL PUMP OUTLET						
8008-	2F..FJ60			15403-60020-	1	455	
	15413A UNION (FOR OIL PUMP OUTLET PIPE)						
8008-	2F..FJ60			90404-16008-	1	455	
	15413B SLEEVE, BALL (FOR OIL PUMP OUTLET PIPE)						
8008-	2F..FJ60			90410-11005-	1	455	
	15413C NUT, UNION (FOR OIL PUMP OUTLET PIPE)						
8008-	2F..FJ60			90402-16042-	1	455	
	15413D GASKET (FOR OIL PUMP OUTLET PIPE)						
8008-	2F..FJ60			90430-15261-	2	455	
	15413E BOLT, UNION (FOR OIL PUMP OUTLET PIPE)						
8008-	2F..FJ60			90401-14093-	1	455	
	15705 PIPE SUB-ASSY, OIL, INJECTION PUMP INLET						
8510-	2H..HJ60..ATM			15707-68020-	1	567	
8510-	2H..HJ60..MTM			15707-68011-	1	567	
	15705A UNION (FOR INJECTION PUMP INLET PIPE)						
8510-	2H..HJ60			90401-10006-	1	567	
	15705B GASKET (FOR INJECTION PUMP INLET PIPE)						
8510-	2H..HJ60			90430-10035-	2	567	
	15705C CLAMP (FOR INJECTION PUMP INLET PIPE)						
8510-	2H..HJ60			90467-08516-	1	567	
	15705D BRACKET (FOR INJECTION PUMP INLET PIPE)						
8510-	2H..HJ60			15783-68010-	1	567	
	15706 PIPE SUB-ASSY, OIL, INJECTION PUMP OUTLET						
8008-8510	3B..BJ60			15077-56010-	1	455	566

PROD.DATE	MODELS	DESCRIPTION	R/P	PART NUMBER	QTY	REV.REF.CODE FROM	REV.REF.CODE UP TO
	15706A	UNION (FOR INJECTION PUMP OUTLET PIPE)					
8008-8510	3B..BJ60			90044-01010-	1	455	566
	15706B	GASKET (FOR INJECTION PUMP OUTLET PIPE)					
8008-8510	3B..BJ60			90044-30026-	2	455	566

PROD.DATE	MODELS	DESCRIPTION	R/P	PART NUMBER	QTY	REV.REF.CODE FROM	REV.REF.CODE UP TO

FIG.15-02 OIL FILTER

MR4-11-0376

(8008-)2F

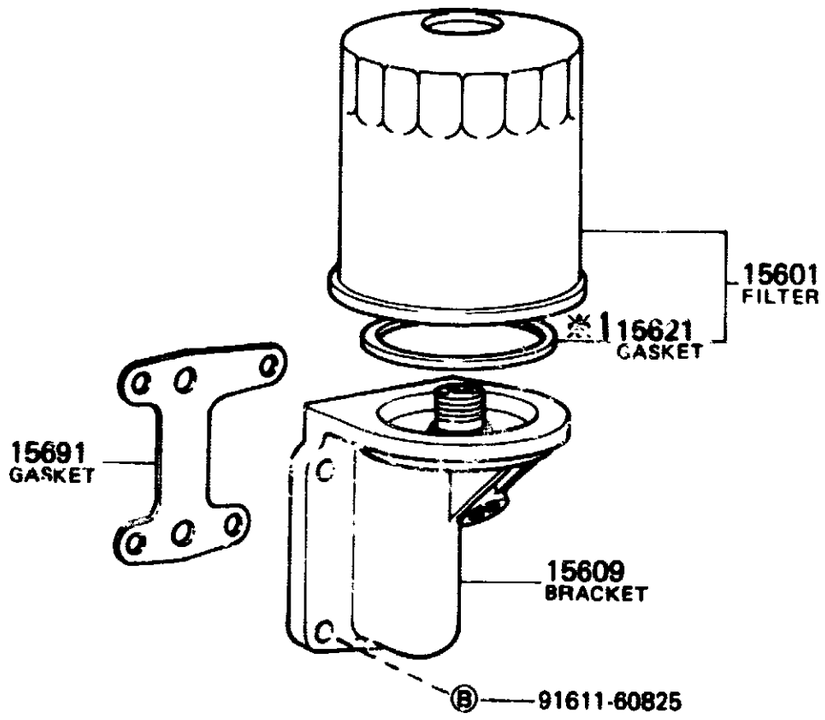

(8008-8411)3B

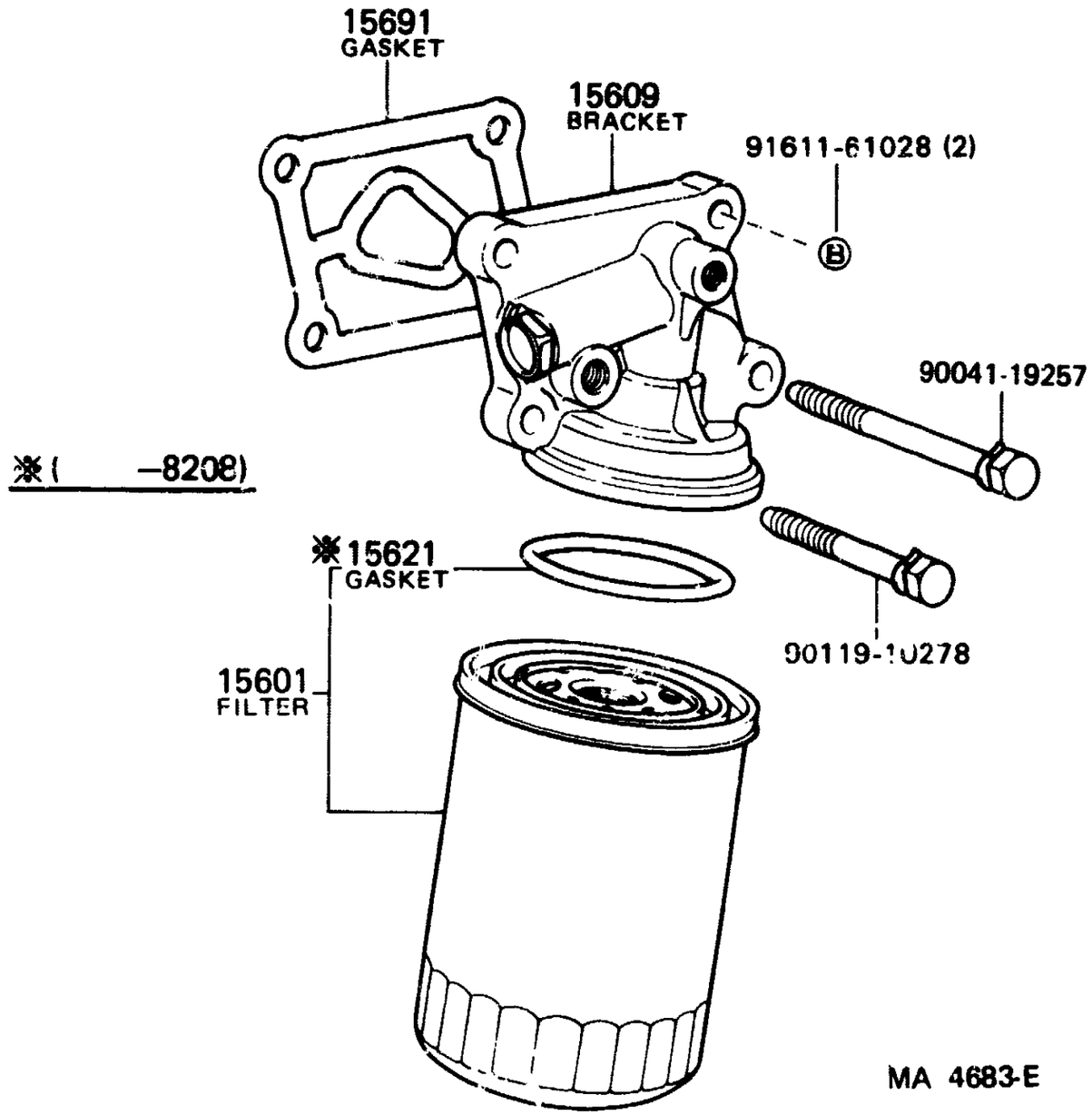

MA 4683-E

W/OIL COOLER

※1(-8208)
※2(-8511)
※3(8511-)

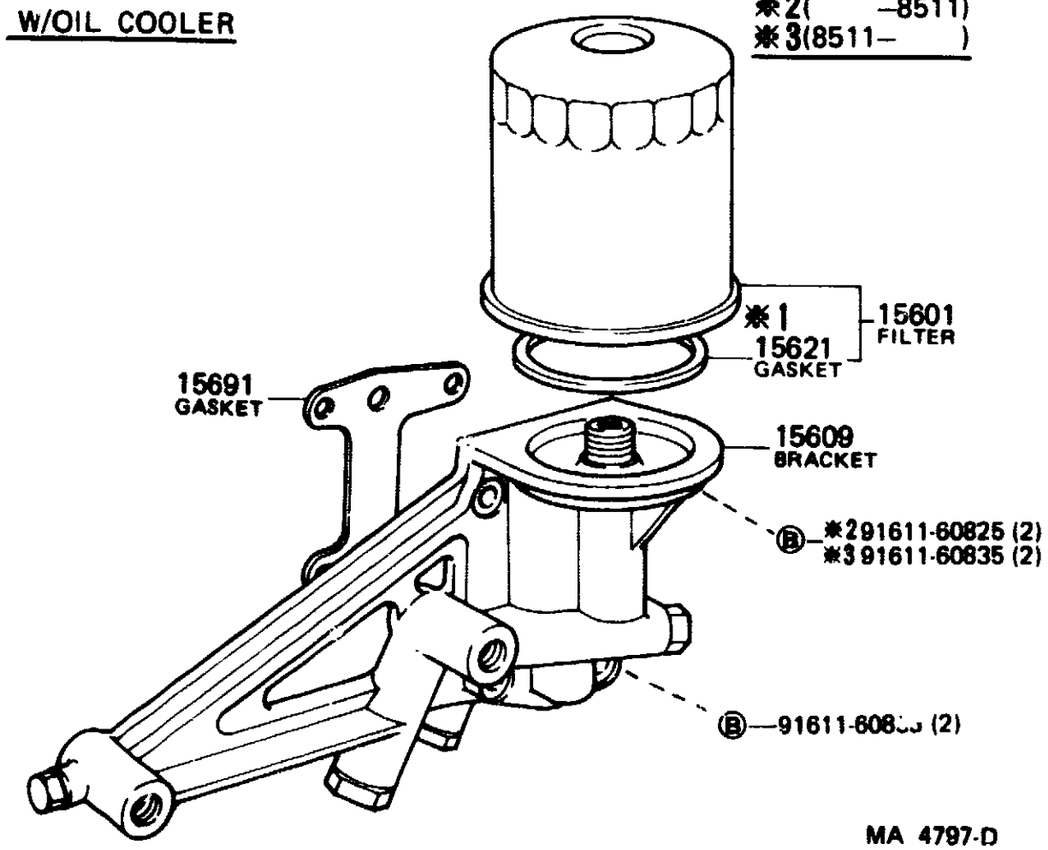

MA 4797-D

FIG.15-02 OIL FILTER

1-D4

MR4-11-0377

(8411-8510)3B

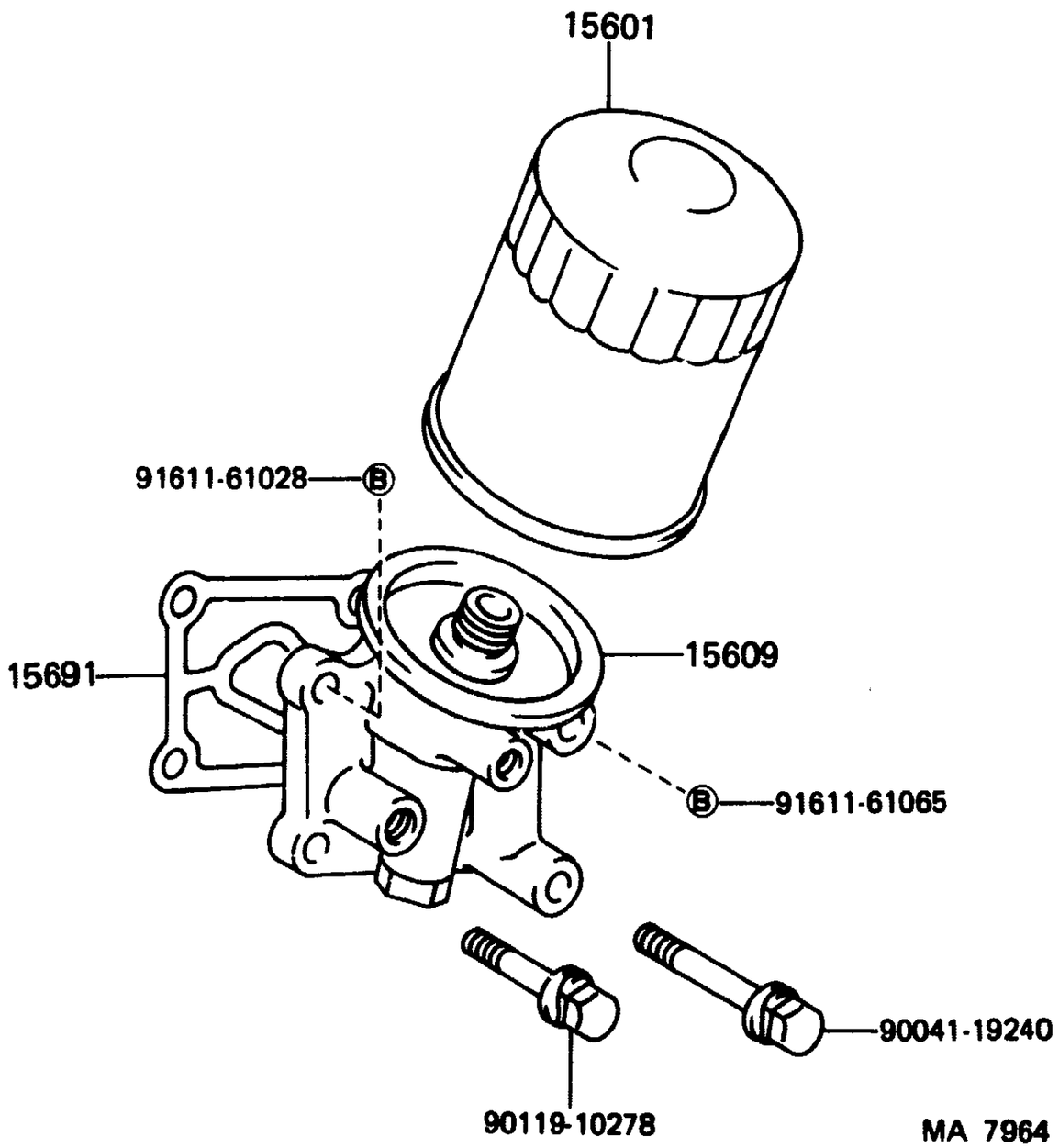

MA 7964

(8510-)2H

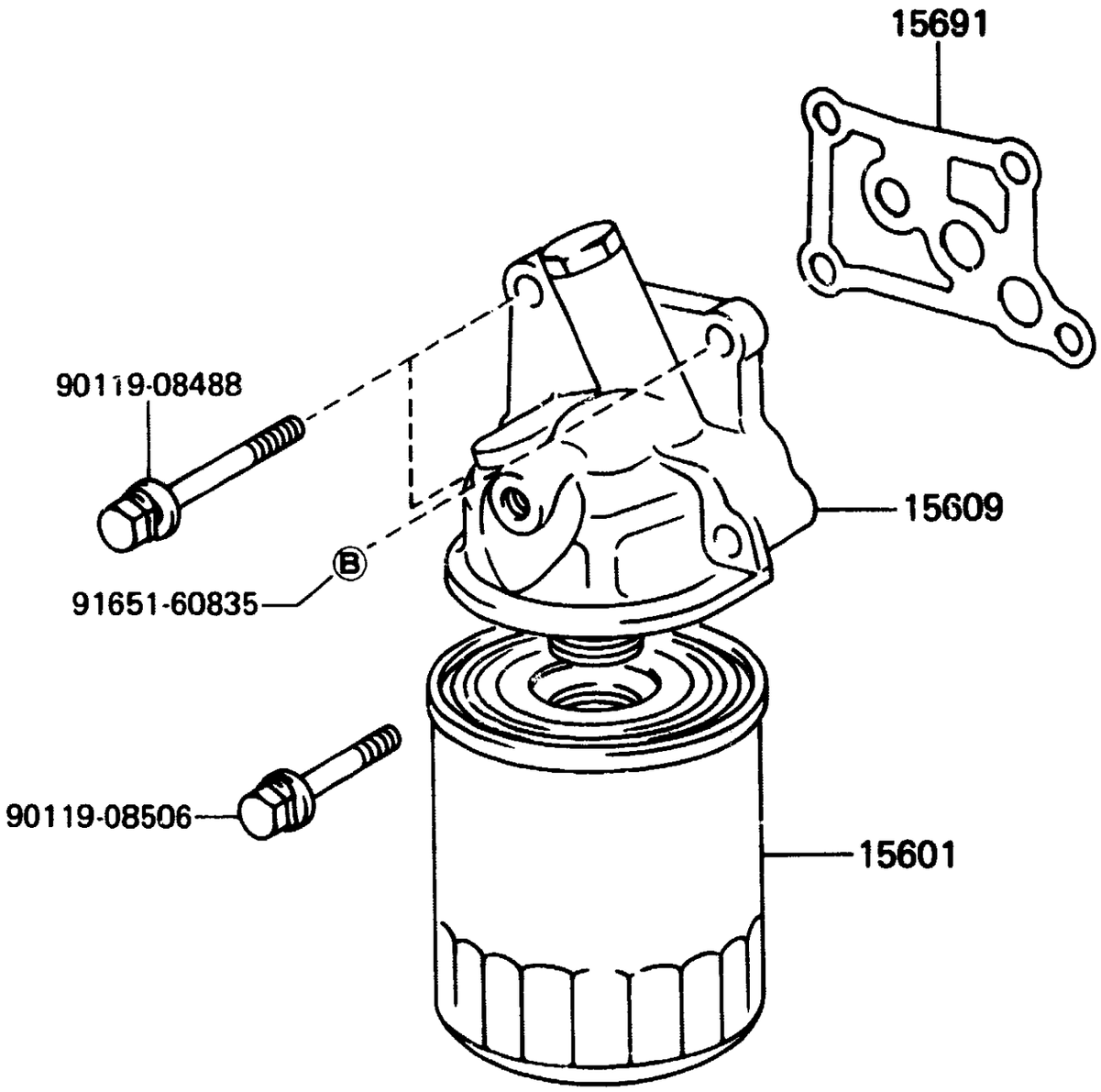

MA 7933

MA7964

MA7933

PROD.DATE	MODELS	DESCRIPTION	R/P	PART NUMBER	QTY	REV.REF.CODE FROM	REV.REF.CODE UP TO
FIG.	15-02 OIL FILTER						
	15601 FILTER SUB-ASSY, OIL						
8510-	2H..HJ60			15601-68010-	1	567	
8008-	3B,2F..BJ60,FJ60			15600-41010-	1	455	
	15609 BRACKET SUB-ASSY, OIL FILTER						
8511-	2F..FJ60	W/OIL COOLER		15609-61012-	1		
8008-8110	2F..FJ60..CND			15609-61020-	1	455	458
8008-8210	2F..FJ60..USA	W/OIL COOLER	#	15609-61010- (15609-61011-)	1	455	
8210-8511	2F..FJ60..USA	W/OIL COOLER		15609-61011-	1		
8510-	2H..HJ60			15609-68030-	1	567	
8008-8411	3B..BJ60			15609-56040-	1	455	514
8411-8510	3B..BJ60			15609-58010-	1	515	566
	15621 GASKET, OIL FILTER BODY						
8008-8208	3B,2F..BJ60,FJ60			15621-41010-	1	455	
	15691 GASKET, OIL FILTER						
8008-8510	2F..FJ60			15691-60010-	1	455	566
8510-	2H..HJ60			15691-68020-	1	567	
8008-8510	3B..BJ60			15691-56030-	1	455	566

FIG•15-03 OIL COOLER

MR4-11-0378

(8008–)2F••USA

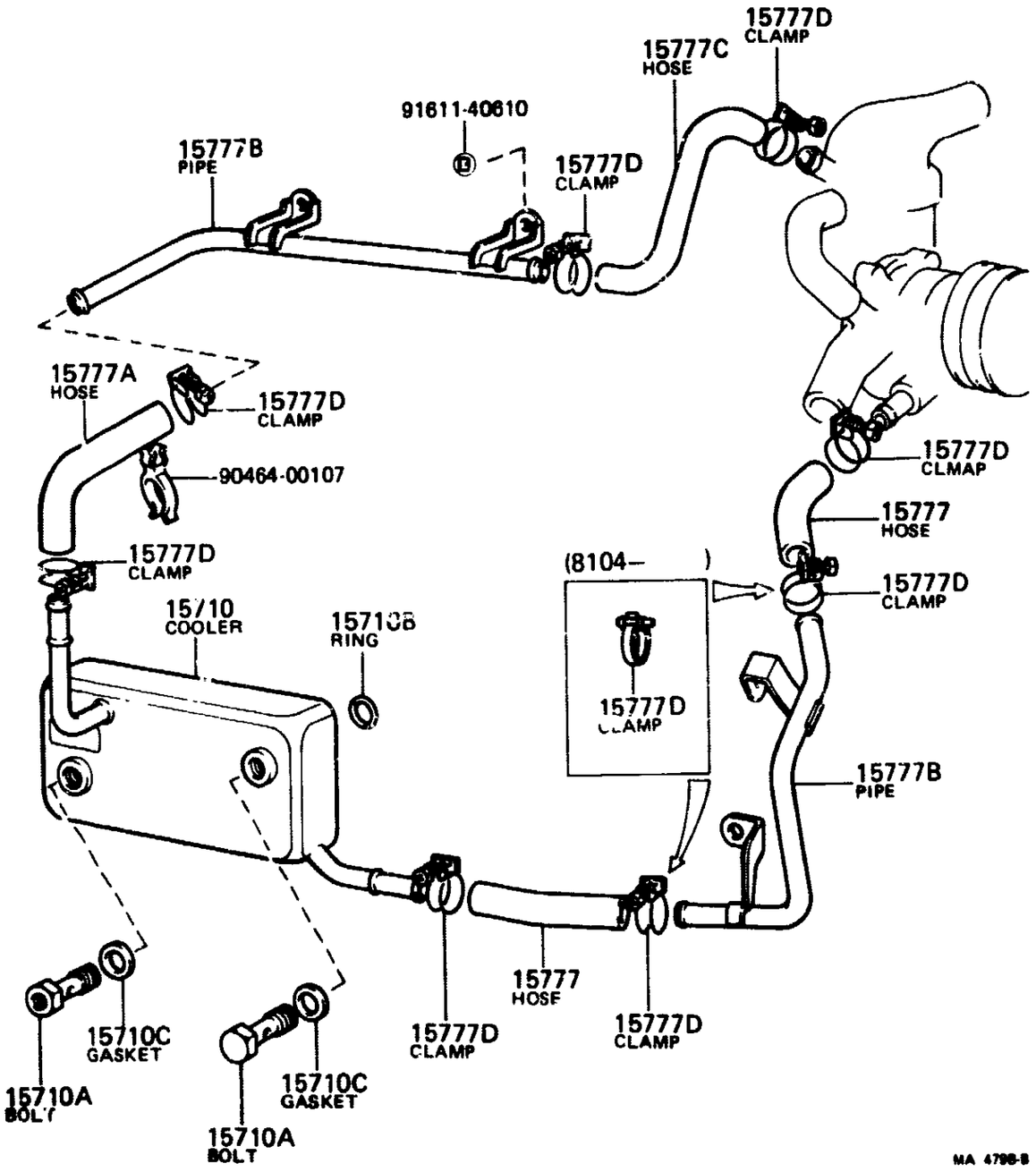

MA 4798-B

(8008–8510)3B

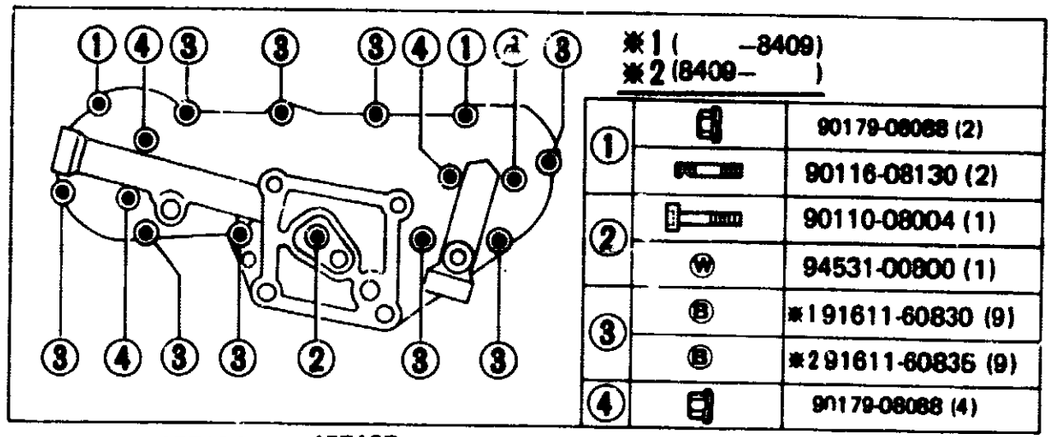

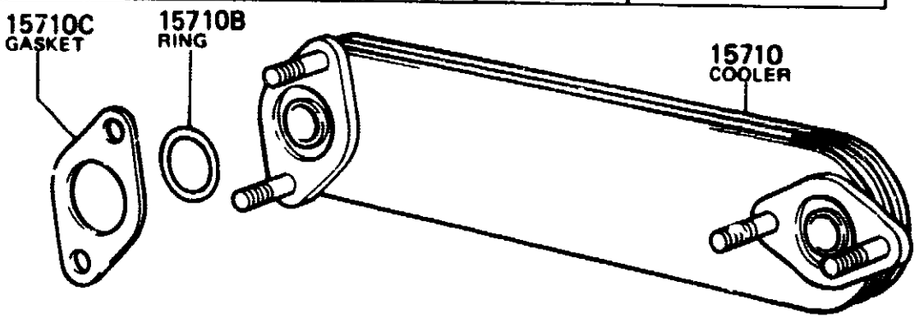

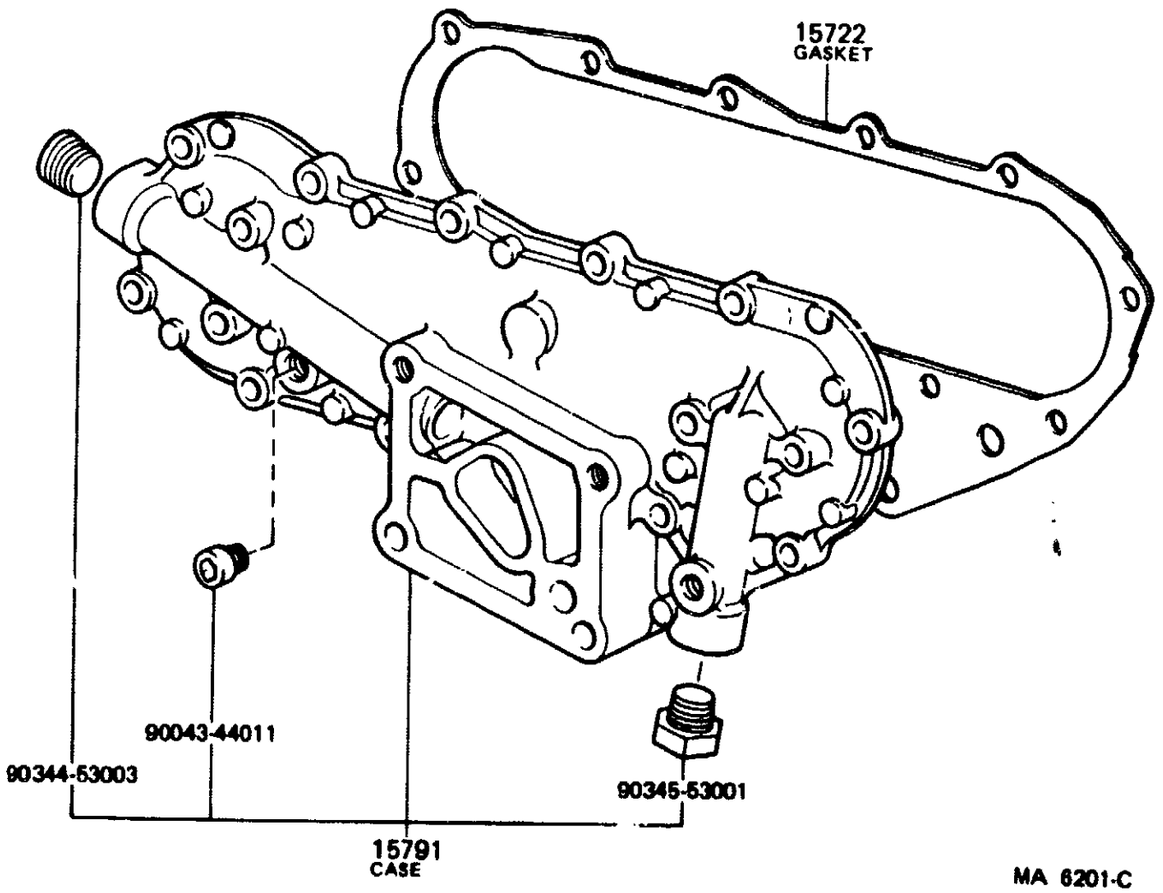

MA 6201-C

HR4-13-0201

GENUINE TOYOTA PARTS

FIG.15-03 OIL COOLER

(8510-)2H

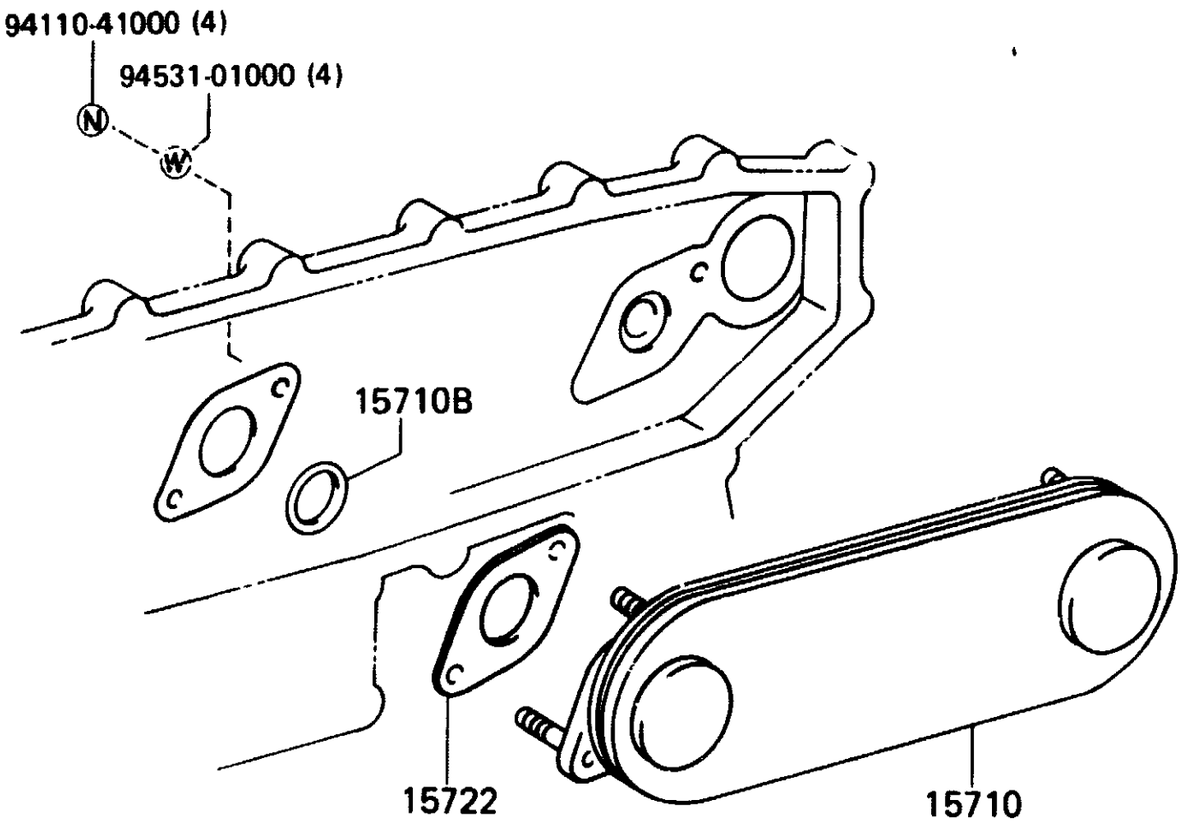

MA 4865-B

PROD.DATE	MODELS	DESCRIPTION	R/P	PART NUMBER	QTY	REV.REF.CODE FROM	REV.REF.CODE UP TO
FIG.	15-03 OIL COOLER						
	15710 COOLER ASSY, OIL						
8008-	2F..FJ60..USA			15710-61010-	1	455	
8510-	2H..HJ60			15710-68010-	1	567	
8008-8409	3B..BJ60		#	15710-56040- (15710-56041-)	1	455	
8409-8510	3B..BJ60			15710-56041-	1		566
	15710A BOLT, UNION (FOR OIL COOLER)						
8008-8210	2F..FJ60..USA			90401-18083-	1	455	
8008-8210	2F..FJ60..USA	W/SWITCH HOLE		90401-18084-	1	455	
8210-	2F..FJ60..USA			90401-18083-	2		
	15710B RING, O						
8008-	2F..FJ60..USA			90301-21176-	2	455	
8510-	2H..HJ60				2	567	
8008-8510	3B..BJ60			90301-20001-	2	455	566
	15710C GASKET						
8008-	2F..FJ60..USA			90430-18012-	2	455	
8008-8510	3B..BJ60			90923-05014-	2	455	566
	15722 GASKET, OIL COOLER						
8510-	2H..HJ60			90923-05013-	2	567	
8008-8403	3B..BJ60		#	15725-56010- (15725-56011-)	1	455	
8403-8510	3B..BJ60			15725-56011-	1		566
	15777 HOSE, OIL COOLER						
8008-8308	2F..FJ60..USA	PIPE TO OIL COOLER LOWER	#	99553-30210- (99555-30210-)	1	455	
8008-	2F..FJ60..USA	PIPE TO WATER PUMP		90910-05155-	1	455	
8308--	2F..FJ60..USA	PIPE TO OIL COOLER LOWER		99555-30210-	1		

GENUINE TOYOTA PARTS

PROD.DATE	MODELS	DESCRIPTION	R/P	PART NUMBER	QTY	REV.REF.CODE FROM	REV.REF.CODE UP TO
	15777A HOSE, OIL COOLER						
8008-8308	2F..FJ60..USA			99553-30280-	1	455	
8308-	2F..FJ60..USA			99555-30280-	1		
	15777B PIPE, OIL COOLER						
8008-	2F..FJ60..USA	UPR		15707-61010-	1	455	
8008-	2F..FJ60..USA	LWR		15771-61010-	1	455	
	15777C HOSE, OIL COOLER						
8008-	2F..FJ60..USA			15777-61011-	1	455	
	15777D CLAMP OR CLIP, HOSE (FOR OIL COOLER HOSE)						
8008-8104	2F..FJ60..USA		#	96111-10270- (96112-10270-)	8	455	
8104-	2F..FJ60..USA	LWR PIPE SIDE		90460-24039-	2		
8104-	2F..FJ60..USA			96112-10250-	6		
	15791 CASE, OIL COOLER						
8008-8403	3B..BJ60		#	15701-56010- (15701-56011-)	1	455	
8403-8510	3B..BJ60			15701-56011-	1		566

FIG.16-01 WATER PUMP

MR4-11-0379

(8008-)2F

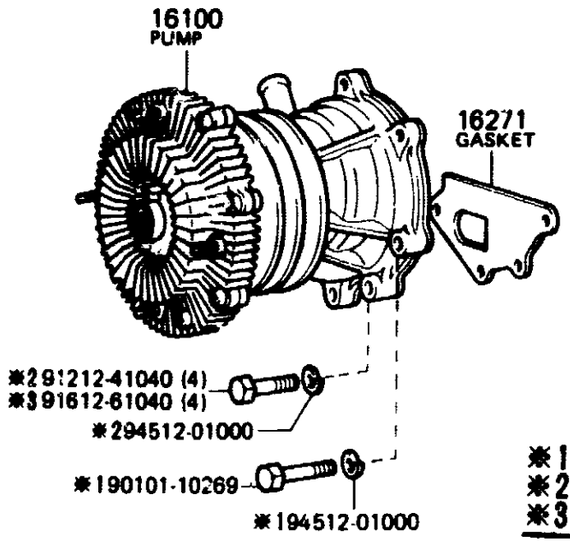

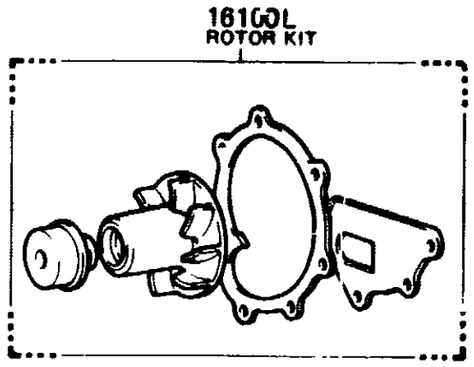

※1 (-8110) CND
※2 (-8410)
※3 (8410-)

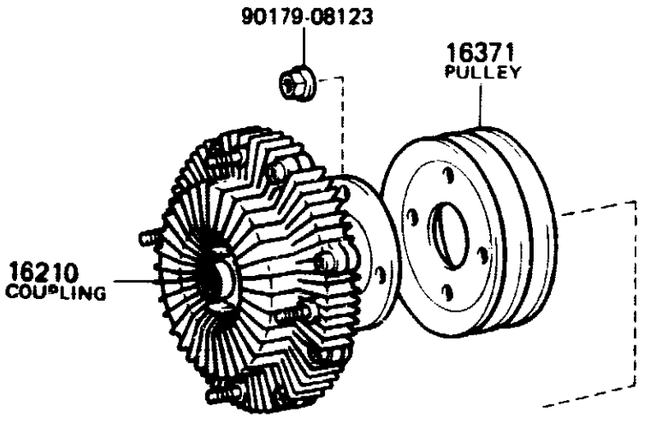

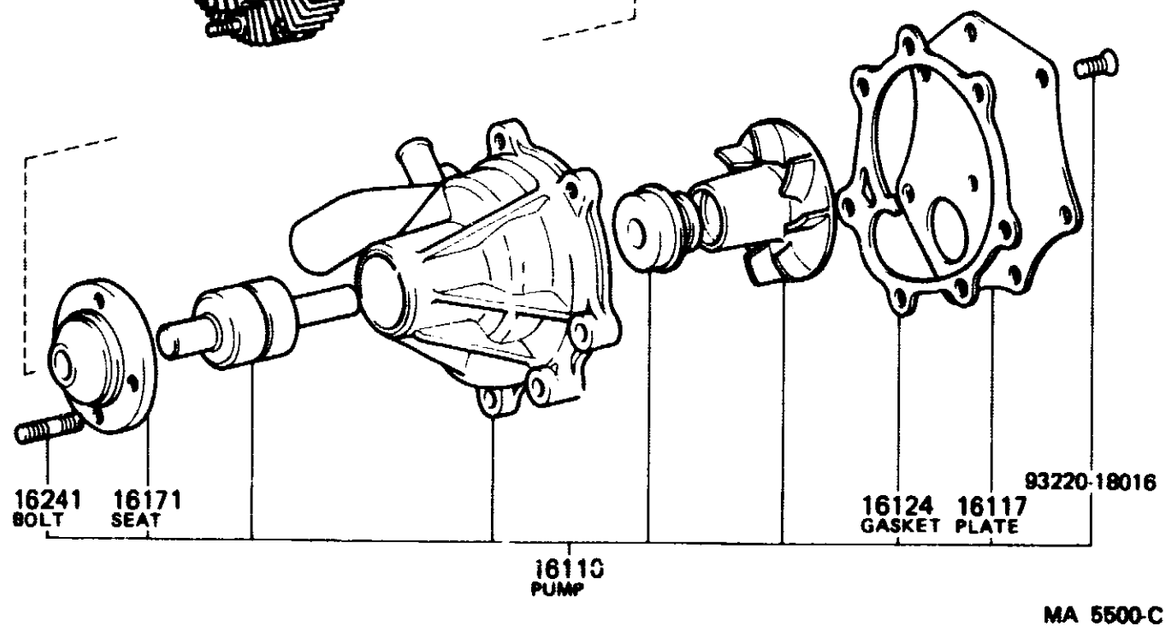

MA 5500-C

(8008-8510)3B

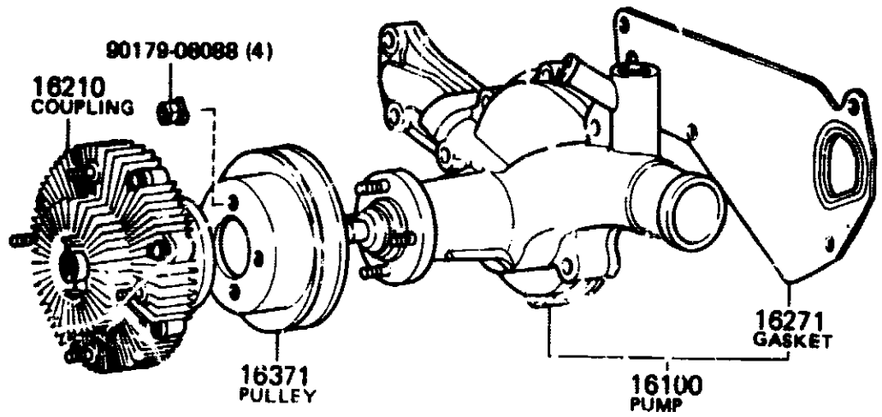

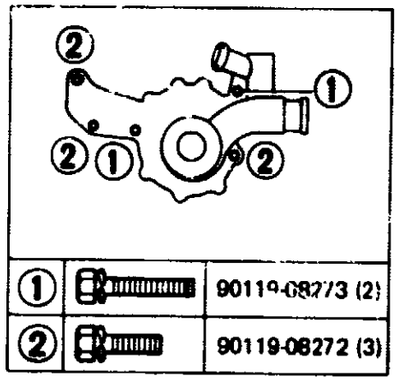

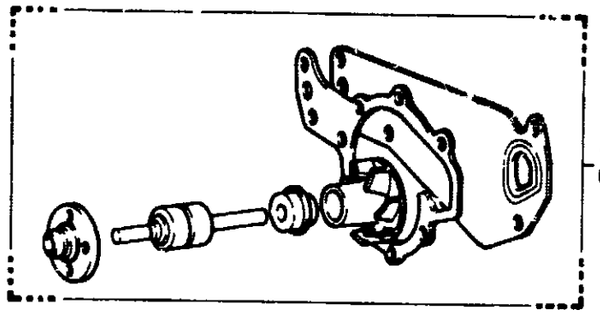

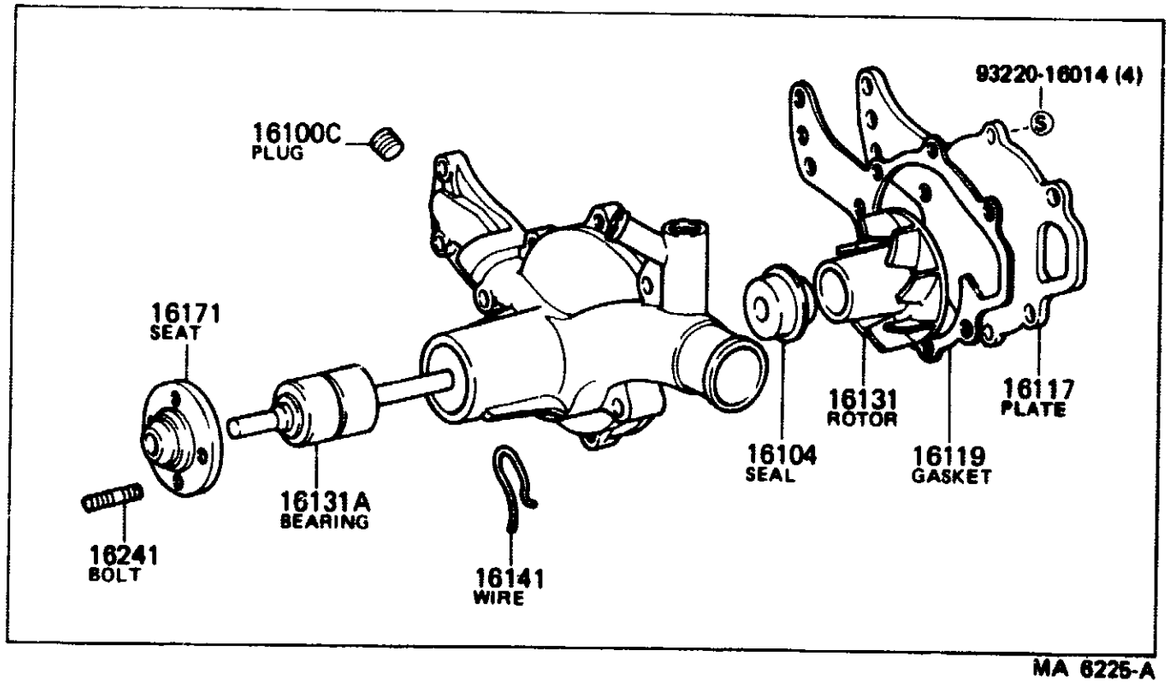

MA 6225-A

FIG.16-01 WATER PUMP

1-J4

(8510-)2H

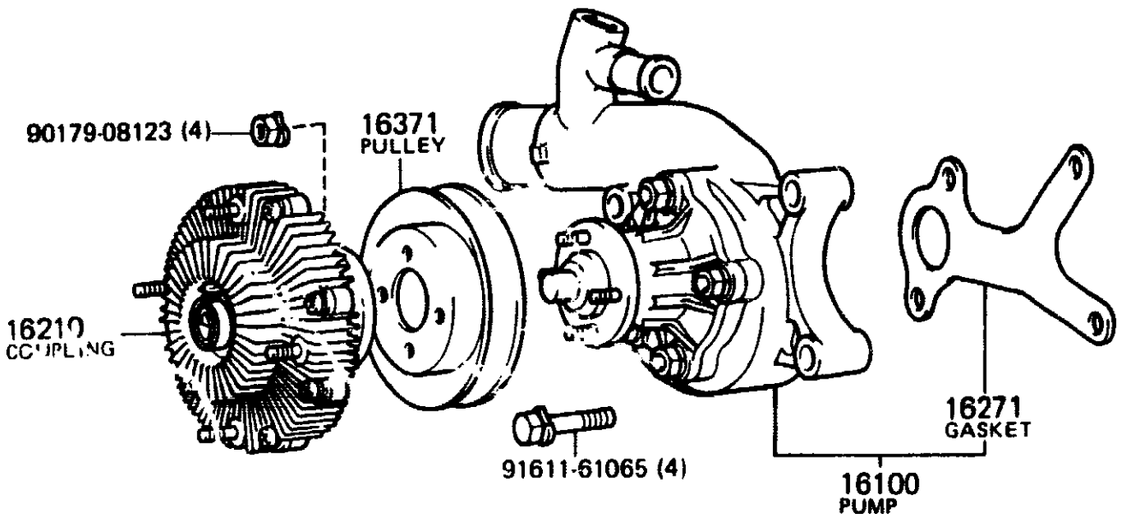

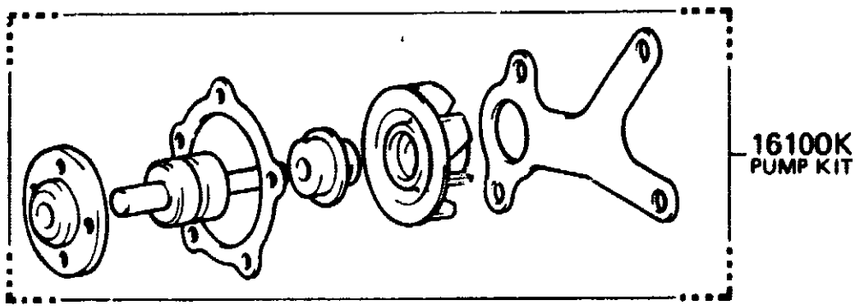

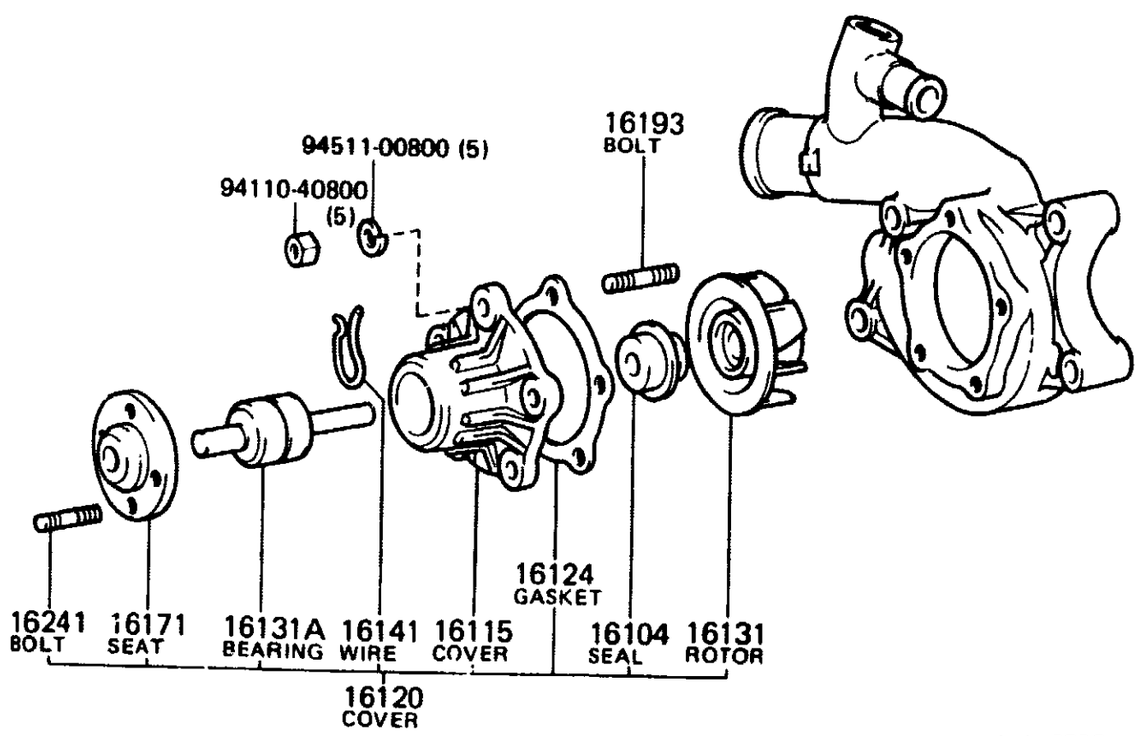

MA 8738

GENUINE TOYOTA PARTS

PROD.DATE	MODELS	DESCRIPTION	R/P	PART NUMBER	QTY	REV.REF.CODE FROM	REV.REF.CODE UP TO
FIG.	16-01 WATER PUMP						
	16100 PUMP ASSY, WATER						
8008-8110	2F..FJ60..CND			16100-61071-	1	455	458
8008-	2F..FJ60..USA			16100-61130 -	1	455	
8510-	2H..HJ60			16100-69035-	1	567	
8008-8510	3B..BJ60			16100-59105-	1	455	566
	16100C PLUG, W/HEAD TAPER SCREW						
8008-8510	3B..BJ60			15184-15010-	1	455	566
	16100K PUMP KIT, WATER						
8510-	2H..HJ60			04161-68010-	1	567	
8008-8510	3B..BJ60			04161-56080-	1	455	566
	16100L ROTOR KIT, WATER PUMP						
8008-8510	2F..FJ60			04162-61020-	1	455	566
	16104 SEAL SET, WATER PUMP						
8008-	2H..HJ60		#	16104-41111- (16104-15020-)	1	455	
8008-8411	3B..BJ60		#	16104-52012- (16104-52013-)	1	455	514
8411-8507	3B..BJ60		#	16104-52011- (16104-52012-)	1	515	
8507-8510	3B..BJ60			16104-52013-	1		566
	16110 PUMP ASSY, WATER, W/O COUPLING						
8008-8110	2F..FJ60..CND			16110-61071-	1	455	458
8008-	2F..FJ60..USA			16110-61081-	1	455	
	16115 COVER, WATER PUMP						
8510-	2H..HJ60			16115-68010-	1	567	
	16117 PLATE, WATER PUMP						
8008-	2F..FJ60			16117-61012-	1	455	
8008-8510	3B..BJ60			16117-56040-	1	455	566

PROD.DATE	MODELS	DESCRIPTION	R/P	PART NUMBER	QTY	REV.REF.CODE FROM	REV.REF.CODE UP TO
	16119	GASKET, WATER PUMP BODY					
8008-8510	3B••BJ60			16119-56040-	1	455	566
	16120	COVER ASSY, WATER PUMP					
8510-	2H••HJ60			16120-69015-	1	567	
	16124	GASKET, WATER PUMP COVER					
8008-	2F••FJ60			16124-61012-	1	455	
8510-	2H••HJ60			16129-68010-	1	567	
	16131	ROTOR, WATER PUMP					
8510-	2H••HJ60			16131-68010-	1	567	
8008-8510	3B••BJ60			16131-56040-	1	455	566
	16131A	BEARING, WATER PUMP					
8510-	2H••HJ60			90369-35016-	1	567	
8008-8510	3B••BJ60		#	90369-38002- (90369-38003-)	1	455	566
	16141	WIRE, WATER PUMP BEARING RETAINING					
8510-	2H••HJ60			16141-68010-	1	567	
8008-8510	3B••BJ60			16141-76010-	1	455	566
	16171	SEAT, WATER PUMP PULLEY					
8510-	2H••HJ60			16171-41170-	1	567	
8008-	3B,2F••BJ60,FJ60			16171-61071-	1	455	
	16193	BOLT, STUD (FOR WATER PUMP COVER)					
8510-	2H••HJ60			16193-47020-	5	567	
	16210	COUPLING ASSY, FLUID					
8008-8110	2F••FJ60••CND		#	16210-61071- (16210-61072-)	1	455	458
8008-	2F••FJ60••USA		#	16210-61120- (16210-61121-)	1	455	
8510-	2H••HJ60			16210-68021-	1	567	
8008-8307	3B••BJ60		#	16210-58011- (16210-58012-)	1	455	

PROD.DATE	MODELS	DESCRIPTION	R/P	PART NUMBER	QTY	REV.REF.CODE FROM	REV.REF.CODE UP TO
	16210	COUPLING ASSY, FLUID CONTINUED					
8307-8510	3B••BJ60			16210-58012-	1		566
	16241	BOLT, STUD (FOR WATER PUMP COUPLING)					
8008-	2F••FJ60			16198-41050-	4	455	
8510-	2H••HJ60			90116-08112-	4	567	
8008-8510	3B••BJ60			16198-41170-	4	455	566
	16271	GASKET, WATER PUMP					
8008-	2F••FJ60			16271-60011-	1	455	
8510-	2H••HJ60			16271-68010-	1	567	
8008-8510	3B••BJ60			16271-56020-	1	455	566
	16371	PULLEY, FAN					
8008-	2F••FJ60			16173-61070-	1	455	
8510-	2H••HJ60			16371-68040-	1	567	
8008-8510	3B••BJ60			16371-56040-	1	455	566

FIG.16-03 RADIATOR & WATER OUTLET

1-L4

HR4-11-038C

(8008-)2F

ILLUST.NO. 1OF2

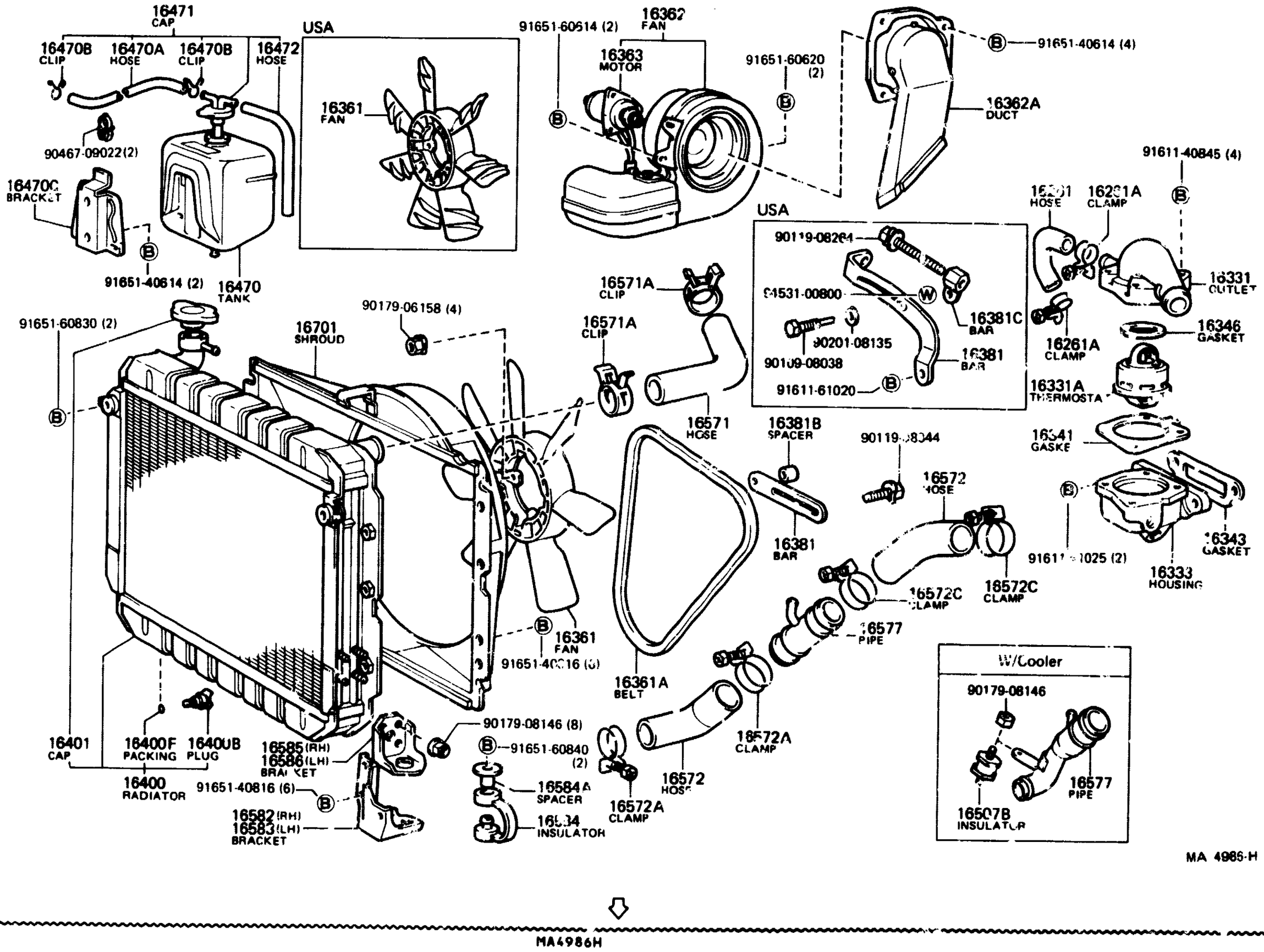

MA 4986-H

(8008-)2F

(8006-8110)3B

ILLUST.NO. 2OF2

V-belt Application Chart

USA

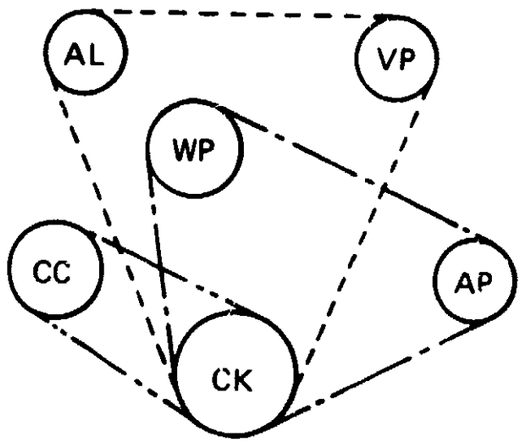

AL : Alternator
WP : Water Pump
CK : Crankshaft
AP : Air Pump
CC : Cooler Compressor
VP : Vane Pump

CND

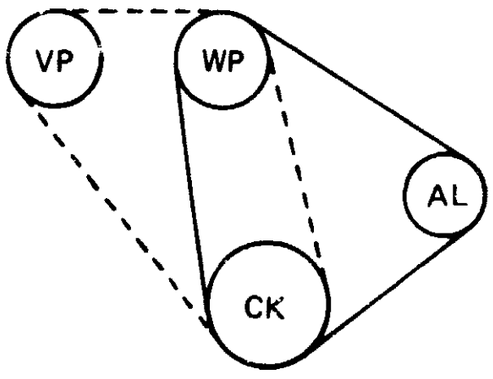

	P.N.C.	FIG. NO.
———	16361A	16-03
- - - - -	44310A	45-03
—·—	17610B	17-05
—··—	88310A	87-19

MA 5177-A

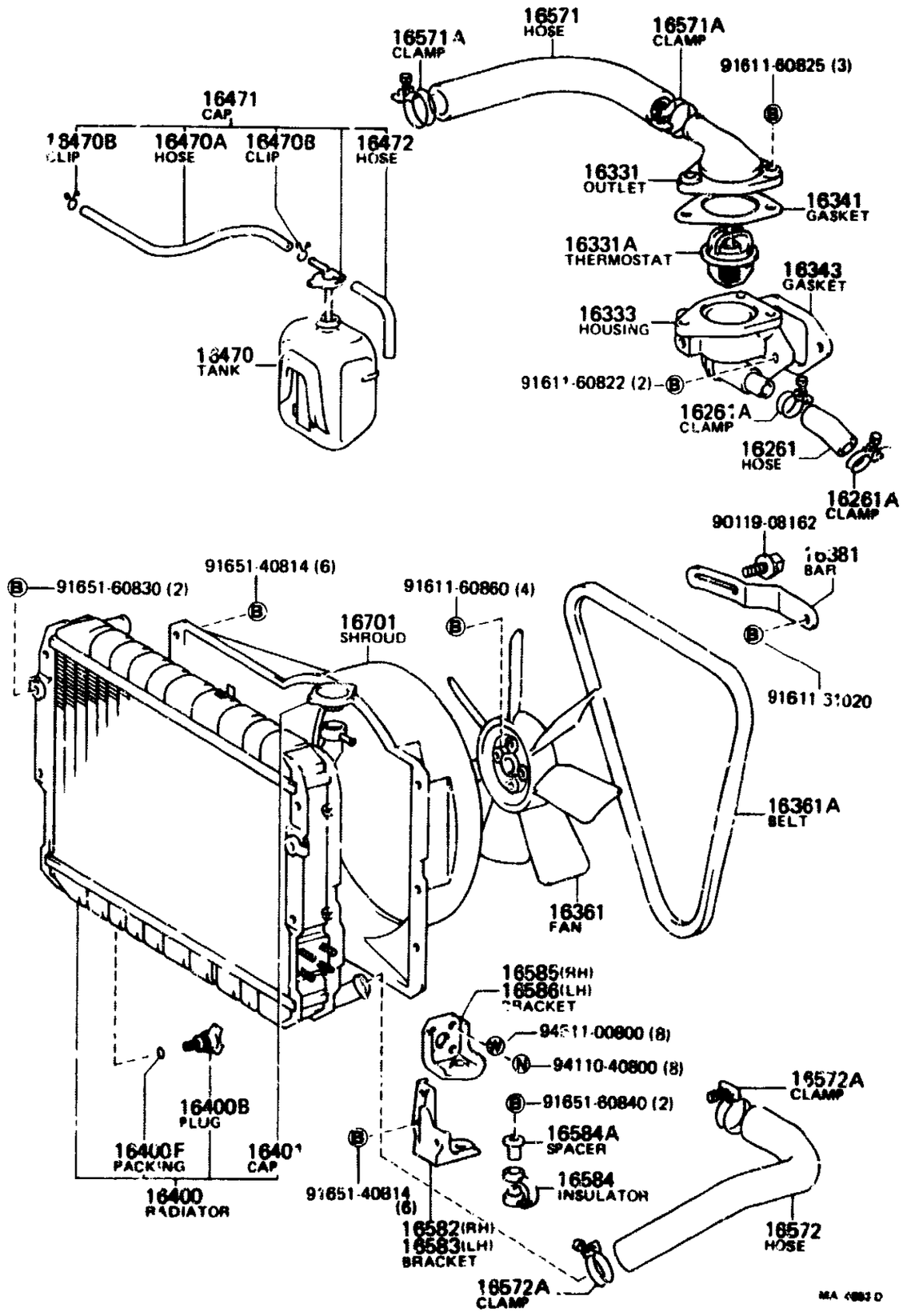

FIG•16-03 RADIATOR & WATER OUTLET

1-A5

MR4-11-0382

(8110-8510)3B

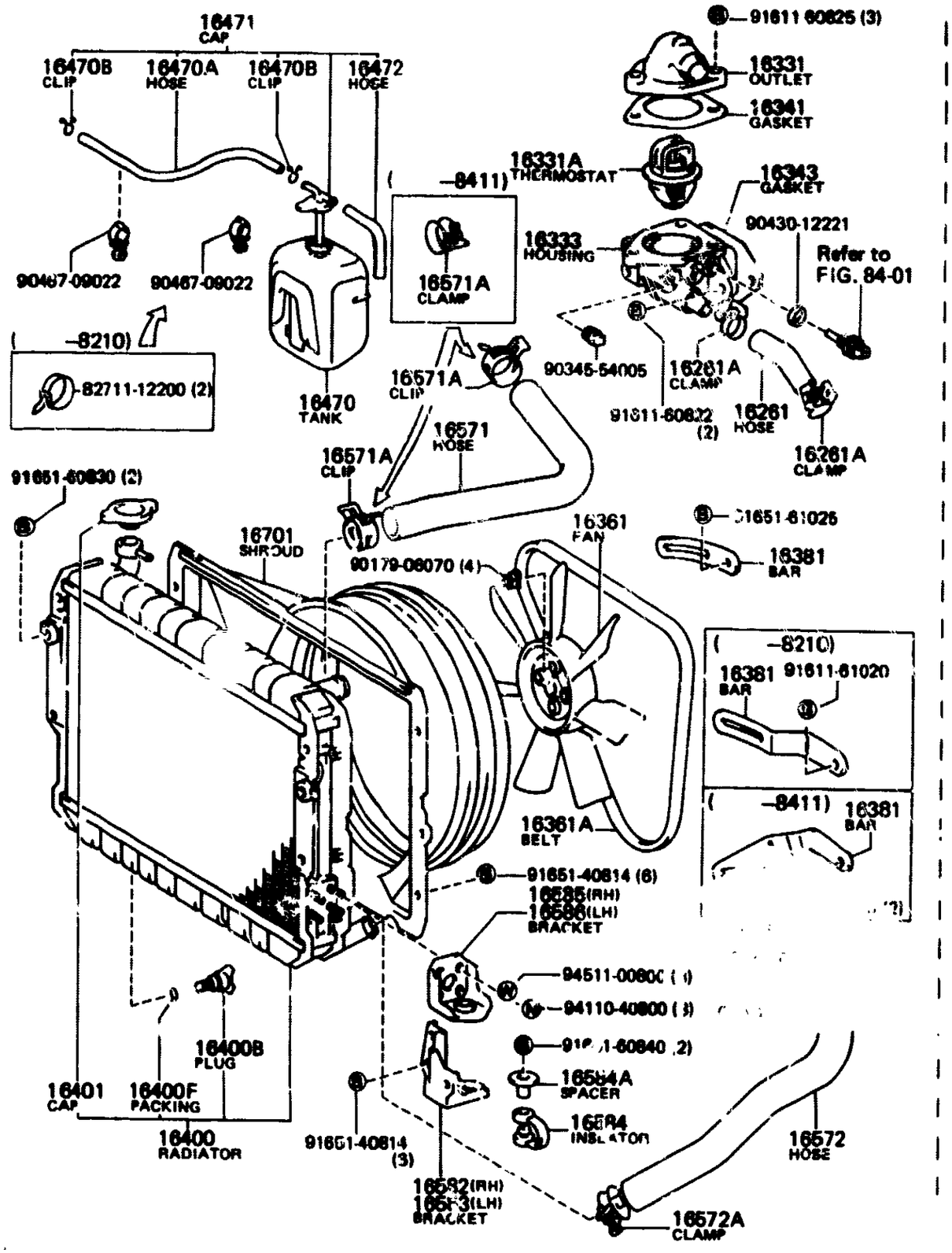

MA 5866-B

MA5866B

FIG.16-03 RADIATOR & WATER OUTLET

1-B5

MR4-11-0383

(8510-)2H

ILLUST. NO. 1OF2

16471 CAP
16470B CLIP
16470A HOSE
16470B CLIP
16472 HOSE
16470 TANK
91611-60835 (2)
16329 STAY
90950-01524
90301-29006
16571A CLIP
16571 HOSE
91611-60822 (3)
16571A CLIP
16331 OUTLET
16323 HOUSING
91611-60835 (8)
91611-60820 (13)
16325 GASKET
16341 GASKET
16261A CLAMP
16331A THERMOSTAT
16261A CLAMP
16261 HOSE
90341-12002
90430-12005
90430-20004
90430-20004
16323B PLUG
16323B PLUG
*16381 BAR
*91611-61018 (2)
16343 GASKET
16333 HOUSING
91611-61025 (3)
91651-60830 (2)
91651-40814 (6)
16701 SHROUD
94180-40600 (4)
16361A BELT
*W/O COOLER
16572 HOSE
16585 (RH)
16586 (LH)
BRACKET
94511-00800 (8)
16572A CLAMP
91651-60840 (2)
16584A SPACER
94110-40800
16400F PACKING
16400B PLUG
16401 CAP
16400 RADIATOR
91651-40814 (6)
16582 (RH)
16583 (LH)
BRACKET
16584 INSULATOR
16572A CLAMP

MA 8739-A

MA8739B

FIG.16-03 RADIATOR & WATER OUTLET

1-C5

GENUINE TOYOTA PARTS

(8510-)2H

ILLUST.NO. 2OF2

V-belt Application Chart

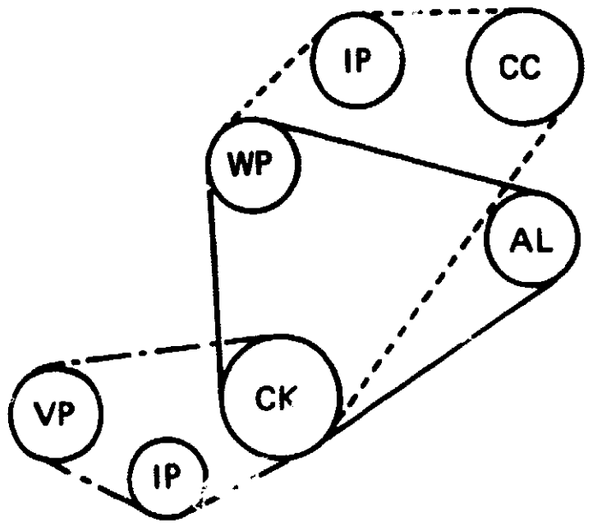

CK : Crankshaft
WP : Water Pump
AL : Alternator
CC : Cooler Compressor
VP : Vane Pump
IP : Idle Pully

	P.N.C.	FIG. No.
———	16361A	16-03
—·—	44310A	45-03
- - - - -	88310A	87-19

MA 5185-A

	PROD.DATE	MODELS	DESCRIPTION	R/P	PART NUMBER	QTY	REV.REF.CODE FROM	REV.REF.CODE UP TO
	FIG.	16-03 RADIATOR & WATER OUTLET						
		16261 HOSE, WATER BY-PASS						
	8008-	2F..FJ60			16261-60011-	1	455	
	8510-	2H..HJ60			99555-40090-	1	567	
	8008-8110	3B..BJ60			# 16261-56011- (16261-56012-)	1	455	458
	8110-8510	3B..BJ60			16261-56012-	1	459	566
		16261A CLAMP OR CLIP, HOSE (FOR WATER BY-PASS HOSE)						
	8008-	2H,2F..HJ60,FJ60			96112-10330-	2	455	
	8008-8510	3B..BJ60			90044-60053-	2	455	566
		16323 HOUSING, WATER INLET						
C	8510-8608	2H..HJ60			16323-68040-	1	567	600
C	8608-	2H..HJ60			16323-68050-	1	601	
		16323B PLUG (FOR WATER INLET HOUSING)						
	8510-	2H..HJ60			90341-20002-	2	567	
		16325 GASKET, WATER INLET HOUSING, NO.1						
	8510-	2H..HJ60			16325-68020-	1	567	
		16329 STAY, WATER INLET HOLE						
	8510-	2H..HJ60			16329-68010-	1	567	
		16331 OUTLET, WATER						
	8008-8110	2F..FJ60..CND			16333-61100-	1	455	458
	8008-	2F..FJ60..USA			16333-61110-	1	455	
	8510-	2H..HJ60			16331-68011-	1	567	
	8008-8110	3B..BJ60			16331-56020-	1	455	458
	8110-8510	3B..BJ60			16331-56030-	1	459	566
		16331A THERMOSTAT						
	8008-8411	2F..FJ60	XHA. 95-100		90916-03052-	1	455	
	8411-	2F..FJ60			90916-03071-	1		

* WAX O—O = WAX TYPE (Opening temperature—Fully open temperature)

PROD.DATE	MODELS	DESCRIPTION	R/P	PART NUMBER	QTY	REV.REF.CODE FROM	REV.REF.CODE UP TO
	16331A THERMOSTAT CONTINUED						
8008-8010	3B..BJ60	XWAX 88-100	#	90916-03045- (90916-03059-)	1	455	
8010-	3B,2H..BJ60,HJ60	XWAX 88-100		90916-03059-	1		
	16333 HOUSING, WATER OUTLET						
8008-8110	2F..FJ60..CND			16331-61041-	1	455	458
8008-	2F..FJ60..USA			16331-61032-	1	455	
8510-	2H..HJ60			16333-68010-	1	567	
8008-8110	3B..BJ60			16333-56040-	1	455	458
8110-8510	3B..BJ60			16333-56060-	1	459	566
	16341 GASKET, WATER OUTLET						
8008-	2F..FJ60			16341-61020-	1	455	
8510-	2H..HJ60			16341-68010-	1	567	
8008-8510	3B..BJ60			16341-56020-	1	455	566
	16343 GASKET, WATER OUTLET HOUSING						
8008-8411	2F..FJ60			16343-60010-	1	455	
8411-	2F..FJ60			16343-61010-	1		
8510-	2H..HJ60			16343-68010-	1	567	
8008-8510	3B..BJ60			16343-56020-	1	455	566
	16346 GASKET, THERMOSTAT						
8008-	2F..FJ60			90430-43002-	1	455	
	16361 FAN						
8008-8110	2F..FJ60..CND			16361-61011-	1	455	458
8008-	2F..FJ60..USA			16361-61020-	1	455	
8510-	2H..HJ60			16361-68010-	1	567	
8008-8510	3B..BJ60			16361-41070-	1	455	566
	16361A BELT, V (FOR FAN AND ALTERNATOR)						
8008-8110	2F..FJ60..CND			99343-11070-	1	455	458
8510-	2H..HJ60			99343-11095-	1	567	

PROD.DATE	MODELS	DESCRIPTION	R/P	PART NUMBER	QTY	REV.REF.CODE FROM	REV.REF.CODE UP TO
	16361A BELT, V (FOR FAN AND ALTERNATOR) CONTINUED						
8008-8510	3B..BJ60			99343-01195-	1	455	566
	16362 FAN, NO.2						
8008-	2F..FJ60..USA			16360-61015-	1	455	
	16362A DUCT, COOLING FAN AIR						
8008-8510	2F..FJ60..USA			53809-90A00-	1	455	566
	16363 MOTOR, COOLING FAN						
8008-	2F..FJ60..USA			16363-61020-	1	455	
	16381 BAR, FAN BELT ADJUSTING						
8008-8110	2F..FJ60..CND			16381-60081-	1	455	458
8008-	2F..FJ60..USA			16381-61011-	1	455	
8510-	2H..HJ60	W/O COOLER		16381-68030-	1	567	
8008-8210	3B..BJ60			16381-56030-	1	455	466
8210-8411	3B..BJ60			16381-56050-	1	467	514
8411-8510	3B..BJ60			16381-58020-	1	515	566
	16381B SPACER, FAN BELT ADJUSTING BAR						
8008-8110	2F..FJ60..CND			90560-12263-	1	455	458
	16381C BAR, FAN BELT ADJUSTING, NO.2						
8008-	2F..FJ60..USA			17317-61020-	1	455	
	16400 RADIATOR ASSY						
8604-	2F..FJ60			16400-61051-	1	573	
8008-8110	2F..FJ60..CND			16400-61040-	1	455	458
8008-8604	2F..FJ60..USA			16400-61050-	1	455	572
8510-	2H..HJ60..ATM	W/COOLER		16400-68090-	1	567	
8510-	2H..HJ60..ATM			16400-68110-	1	567	
8510-	2H..HJ60..MTM			16400-68100-	1	567	
8008-8110	3B..BJ60			16400-58010-	1	455	458
8110-8411	3B..BJ60			# 16400-58011- (16400-58180-)	1	459	514

WAX O—O =
WAX TYPE (Opening temperature—Fully open temperature)

GENUINE TOYOTA PARTS

PROD.DATE	MODELS	DESCRIPTION	R/P	PART NUMBER	QTY	REV.REF.CODE FROM	REV.REF.CODE UP TO
	16400 RADIATOR ASSY CONTINUED						
8411-8510	3B..BJ60			16400-58180-	1	515	566
8411-8510	3B..BJ60	W/COOLER		16400-58190-	1	515	566
	16400B PLUG, RADIATOR DRAIN COCK						
8008-	3B,2H,2F..BJ60,HJ60,FJ60			16417-24200-	1	455	
	16400F PACKING (FOR RADIATOR DRAIN COCK)						
8003-	3B,2H,2F..BJ60,HJ60,FJ60			16418-24200-	1	455	
	16401 CAP SUB-ASSY, RADIATOR						
8411-8604	2F..FJ60			16401-41021-	1	515	572
8604-	2F..FJ60			16401-71010-	1	573	
8008-8411	3B,2F..BJ60,FJ60			16401-41021-	1	455	514
8411-	3B,2H..BJ60,HJ60			16401-71010-	1	515	
	16470 TANK ASSY, RADIATOR RESERVE						
8008-	3B,2H,2F..BJ60,HJ60,FJ60			16480-90A00-	1	455	
	16470A HOSE (FOR RADIATOR RESERVE TANK)						
8008-	2F..FJ60			# 90445-12101- (90445-12065-)	1	455	
8510-	2H..HJ60			# 90445-12002- (90445-12043-)	1	567	
8008-8110	3B..BJ60				1	455	458
8110-8510	3B..BJ60			# 90445-12046- (90445-12065-)	1	459	566
	16470B CLAMP OR CLIP (FOR RADIATOR RESERVE TANK HOSE)						
8008-	3B,2H,2F..BJ60,HJ60,FJ60			90467-11085-	2	455	
	16470C BRACKET (FOR RADIATOR RESERVE TANK)						
8008-	2F..FJ60			85361-30070-	1	455	
	16471 CAP SUB-ASSY, RESERVE TANK						
8008-	2F..FJ60			16405-90A00-	1	455	

PROD.DATE	MODELS	DESCRIPTION	R/P	PART NUMBER	QTY	REV.REF.CODE FROM	REV.REF.CODE UP TO
	16471 CAP SUB-ASSY, RESERVE TANK CONTINUED						
8510-	2H..HJ60			16405-90A02-	1	567	
8008-8110	3B..BJ60				1	455	458
8110-8510	3B..BJ60			16405-90A04-	1	459	566
	16472 HOSE, BREATHER						
8008-	3B,2H,2F..BJ60,HJ60,FJ60			85338-22020-	1	455	
	16507B INSULATOR, RADIATOR PIPE						
8008-	2F..FJ60..USA	W/COOLER		17853-38010-	1	455	
	16571 HOSE, RADIATOR, INLET						
8008-	2F..FJ60			90916-01172-	1	455	
8510-	2H..HJ60			16571-68010-	1	567	
8008-8110	3B..BJ60			16571-58010-	1	455	458
8110-8510	3B..BJ60			16571-58011-	1	459	566
	16571A CLAMP OR CLIP, HOSE (FOR RADIATOR INLET)						
8008-	2F..FJ60			90467-42001-	2	455	
8008-8411	3B..BJ60	RADIATOR SIDE		90460-50016-	1	455	514
8008-8411	3B..BJ60	WATER OUTLET SIDE		96111-10560-	1	455	514
8411-	3B,2H..BJ60,HJ60			90467-42001-	2	515	
	16572 HOSE, RADIATOR, OUTLET						
8008-8510	2F..FJ60	RADIATOR SIDE		16571-61090-	1	455	566
8008-8510	2F..FJ60	WATER PUMP SIDE		90916-01056-	1	455	566
8008-	2F..FJ60..USA	WATER PUMP SIDE,W/COOLER		90916-01163-	1	455	
8008-	2F..FJ60..USA	RADIATOR SIDE,W/COOLER		99554-70185-	1	455	
8510-	2H..HJ60			16572-68010-	1	567	
8008-8510	3B..BJ60			16572-58010-	1	455	566

PROD.DATE	MODELS	DESCRIPTION	R/P	PART NUMBER	QTY	REV.REF.CODE FROM	REV.REF.CODE UP TO
	16572A CLAMP OR CLIP, HOSE (FOR RADIATOR OUTLET, NO.1)						
8008-8010	2F..FJ60	RADIATOR SIDE		96111-10530-	1	455	
8008-8510	2F..FJ60	PIPE SIDE		96111-10580-	1	455	566
8010-8510	2F..FJ60	RADIATOR SIDE		96111-10510-	1		566
8008-8010	2F..FJ60..USA	W/COOLER		96111-10530-	2	455	
8010-	2F..FJ60..USA	W/COOLER		96111-10510-	2		
8510-	2H..HJ60	RADIATOR SIDE			1	567	
8008-8411	3B..BJ60			90460-50016-	2	455	514
8411-8510	3B..BJ60	RADIATOR SIDE			1	515	566
8411-	3B,2H..BJ60,HJ60	WATER PUMP SIDE		96111-10560-	1	515	
	16572C CLAMP OR CLIP, HOSE (FOR RADIATOR OUTLET, NO.2)						
8008-	2F..FJ60			96111-10580-	2	455	
	16577 PIPE, RADIATOR						
8008-8510	2F..FJ60			16577-61040-	1	455	566
8008-	2F..FJ60..USA	W/COOLER		16577-61120-	1	455	
	16582 BRACKET, RADIATOR, NO.1						
8008-	3B,2H,2F..BJ60,HJ60, FJ60			16582-61010-	1	455	
	16583 BRACKET, RADIATOR, NO.2						
8008-	3B,2H,2F..BJ60,HJ60, FJ60			16583-61010-	1	455	
	16584 INSULATOR, RADIATOR MOUNTING						
8008-	3B,2H,2F..BJ60,HJ60, FJ60			16584-61010-	2	455	
	16584A SPACER, RADIATOR MOUNTING INSULATOR						
8008-	3B,2H,2F..BJ60,HJ60, FJ60			90561-09005-	2	455	

PROD.DATE	MODELS	DESCRIPTION	R/P	PART NUMBER	QTY	REV.REF.CODE FROM	REV.REF.CODE UP TO
	16585 BRACKET, RADIATOR, NO.3						
8008-	3B,2H,2F..BJ60,HJ60, FJ60			16585-61010-	1	455	
	16586 BRACKET, RADIATOR, NO.4						
8008-	3B,2H,2F..BJ60,HJ60, FJ60			16586-61010-	1	455	
	16701 SHROUD SUB-ASSY, FAN						
8008-8110	2F..FJ60..CND			16711-61111-	1	455	458
8008-	2F..FJ60..USA			16711-61151-	1	455	
8510-	2H..HJ60			16711-68010-	1	567	
8008-8112	3B..BJ60		#	16711-58010- (16711-58011-)	1	455	
8112-8411	3B..BJ60		#	16711-58011- (16711-58040-)	1		514
8411-8510	3B..BJ60			16711-58040-	1	515	566

(8008-8209)2F••USA

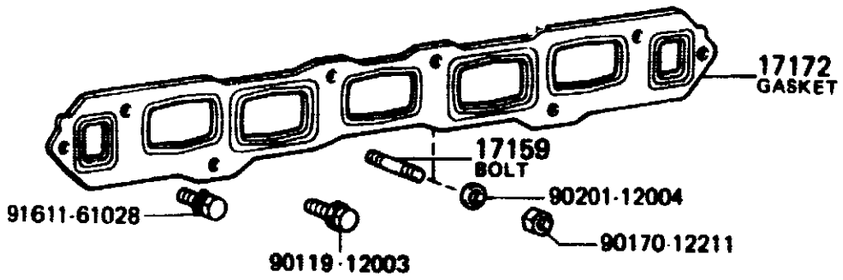

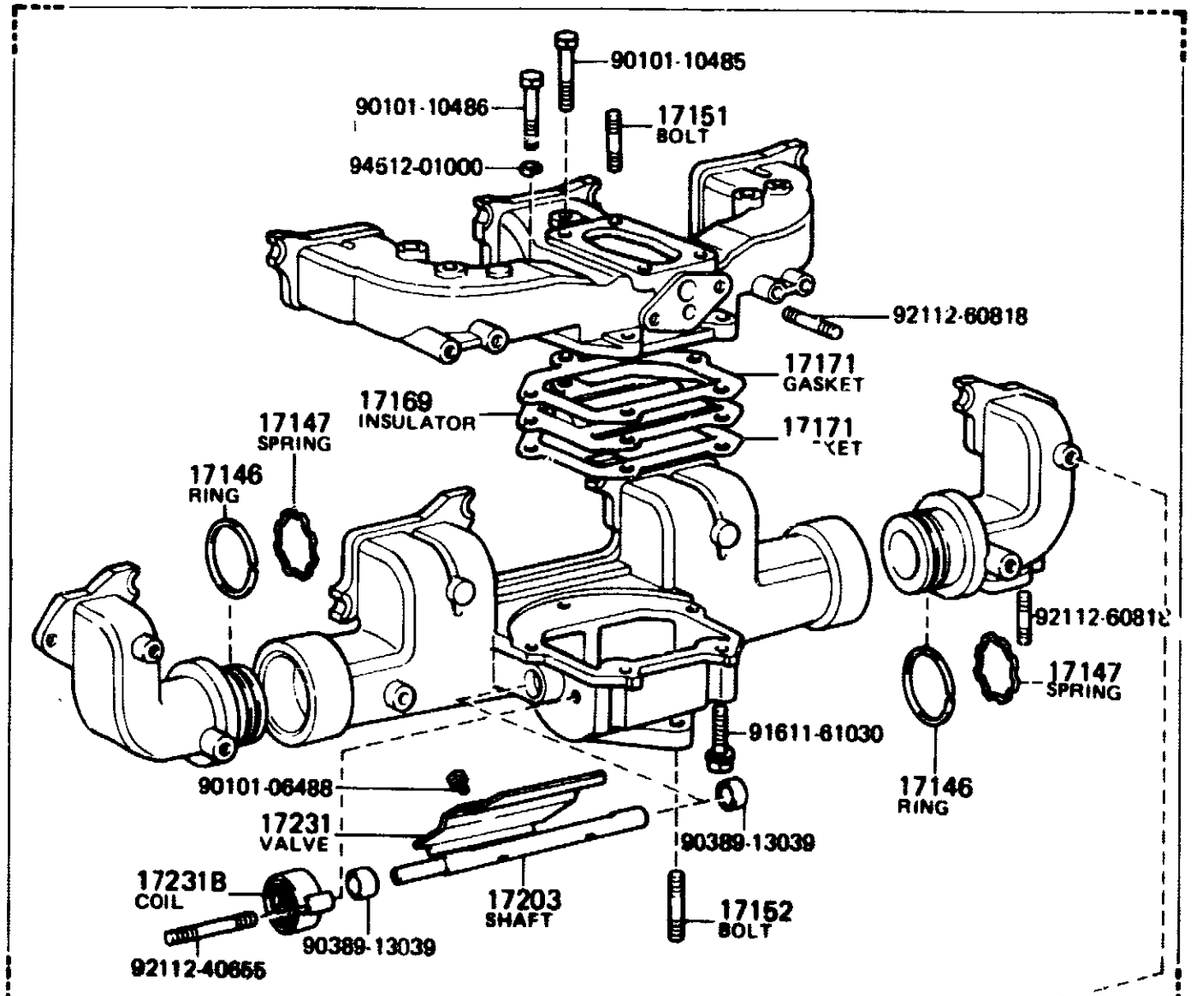

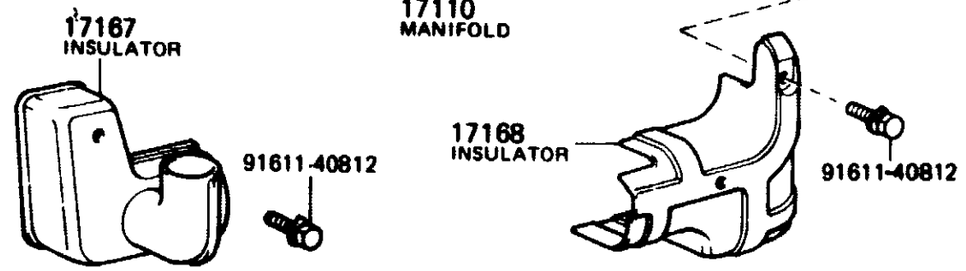

MA 4812

(8209-)2F••USA

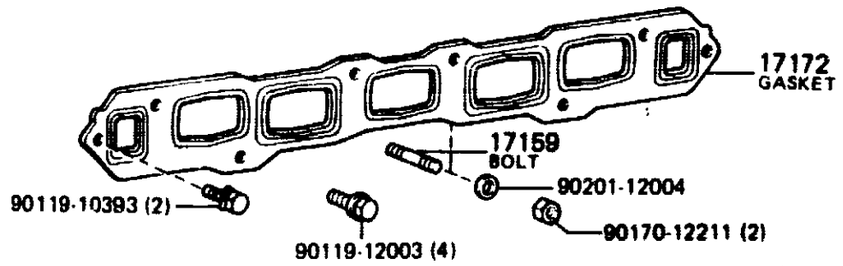

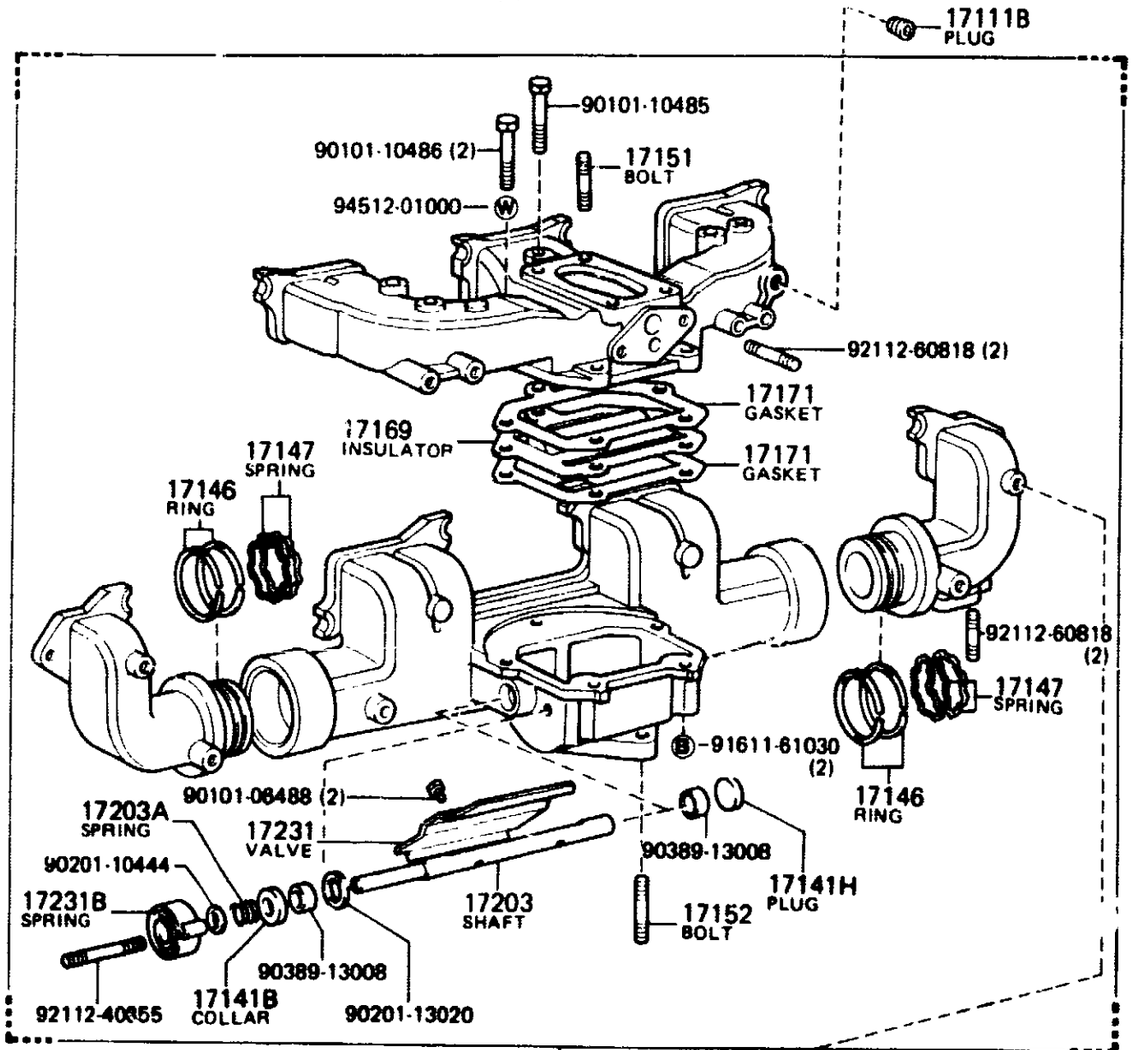

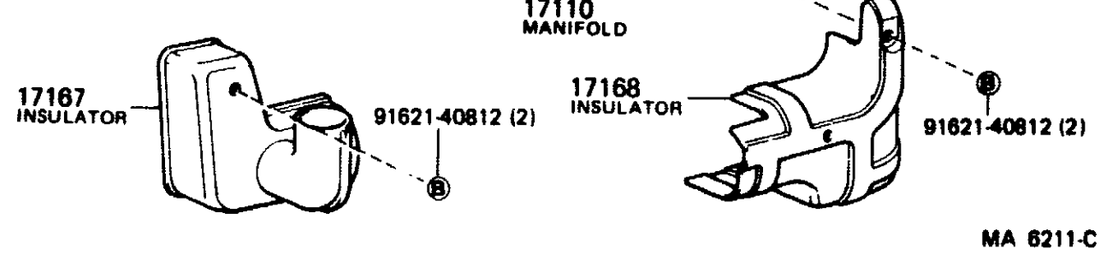

MA 6211-C

MA4812

MA6211C

FIG.17-01 MANIFOLD

MR4-11-0385

(8008-8110)2F..CND

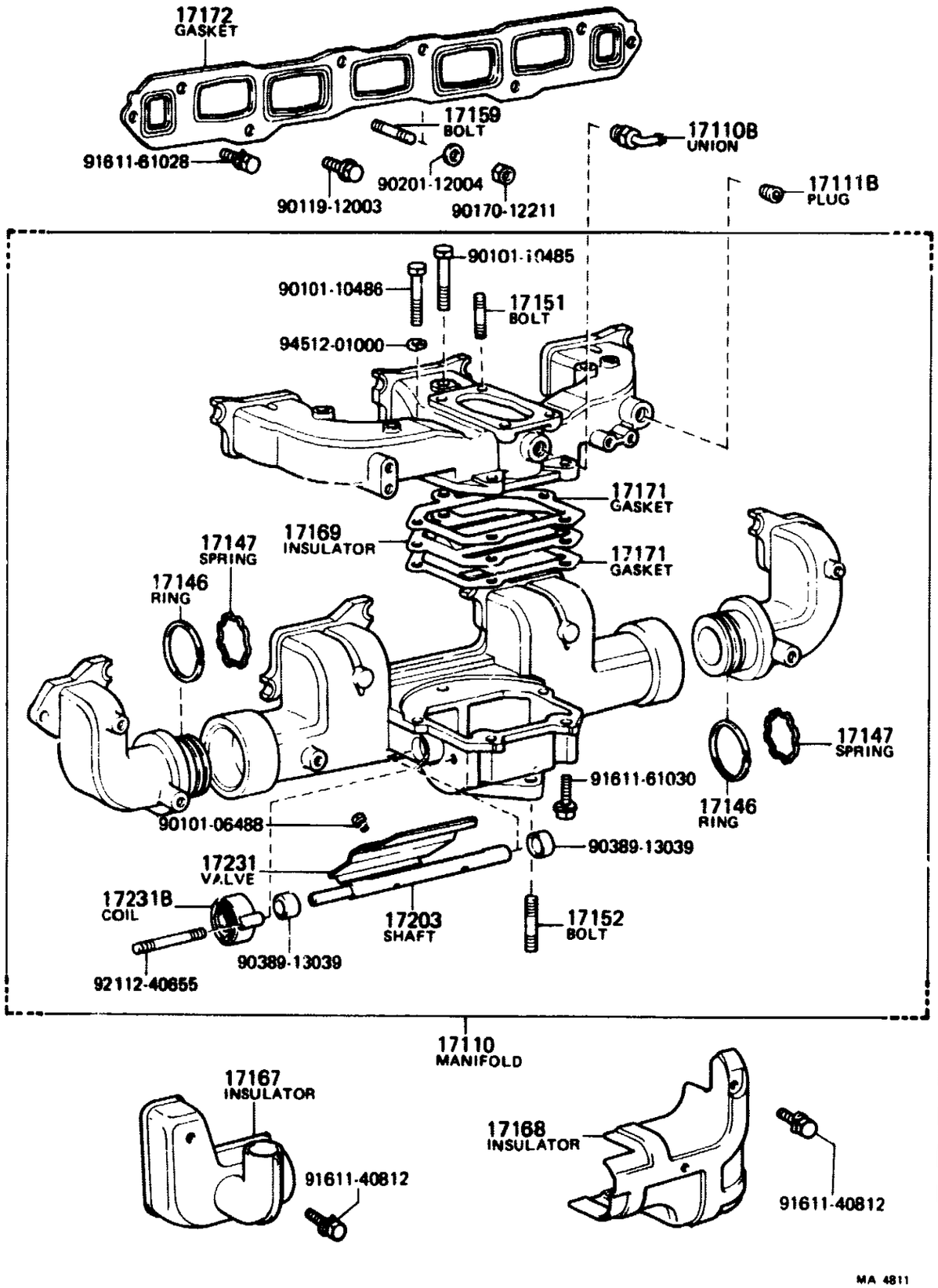

MA 4811

(8008-8510)3B

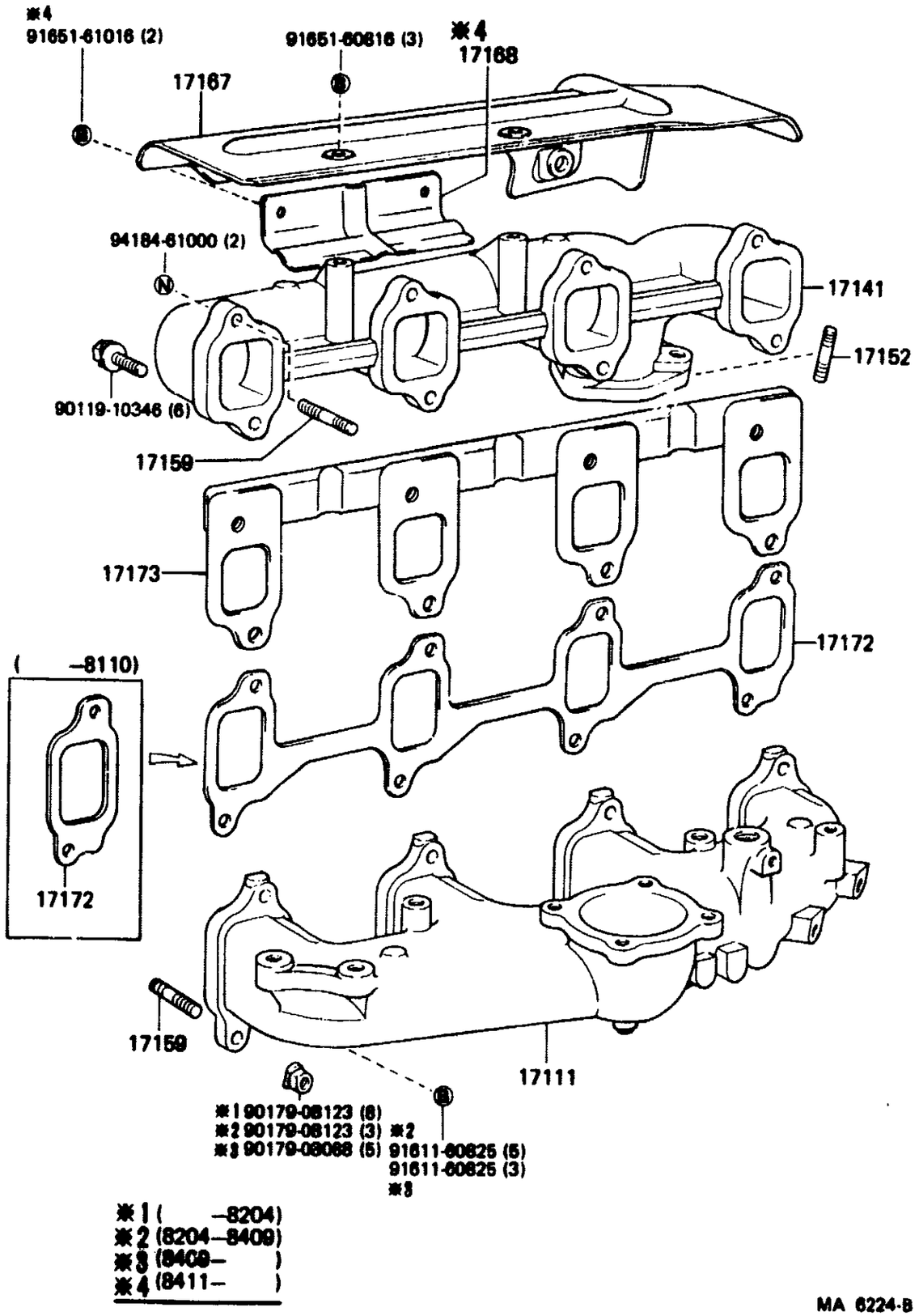

※1 (-8204)
※2 (8204-8409)
※3 (8409-)
※4 (8411-)

MA 6224-B

(8510- .)2H

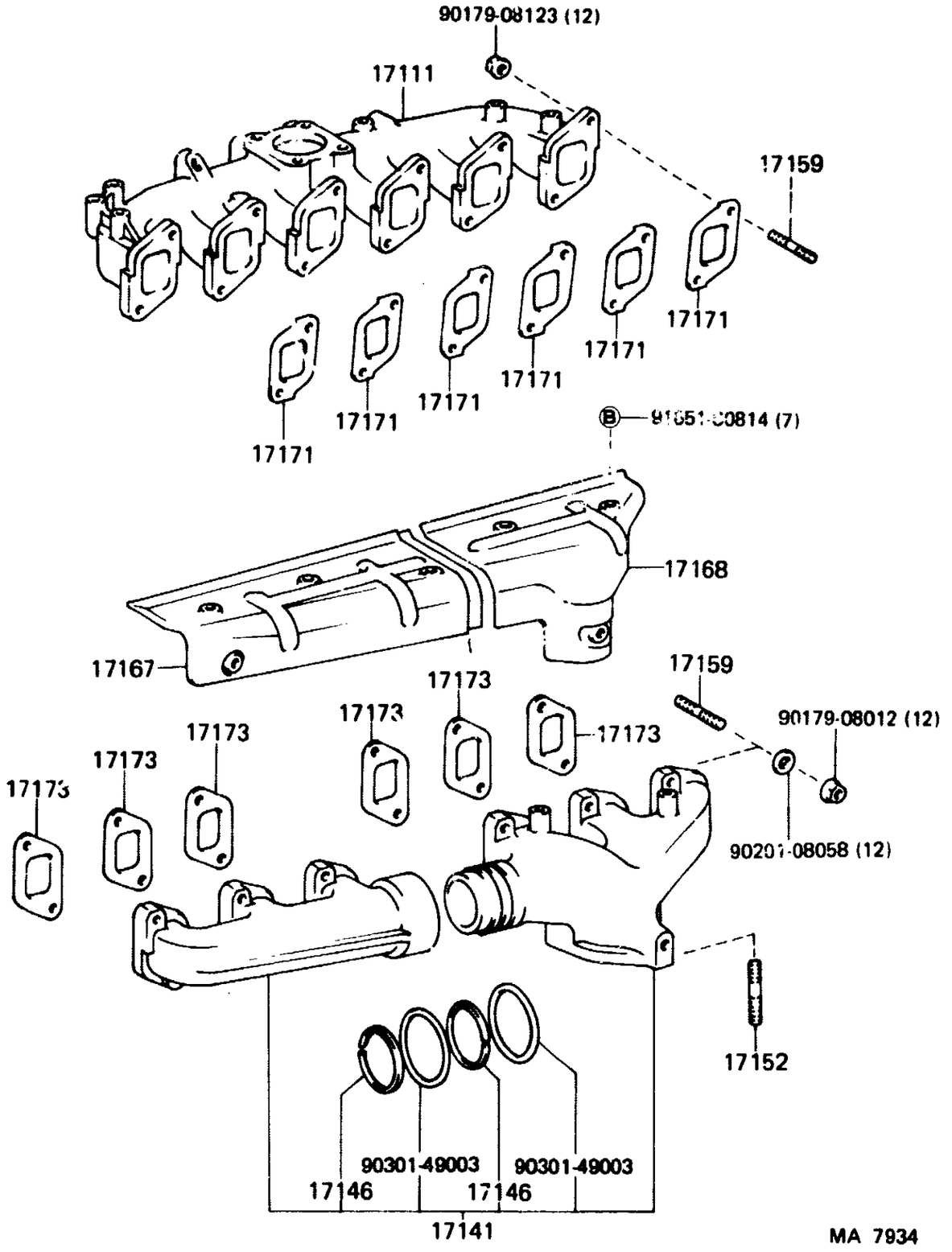

GENUINE TOYOTA PARTS

PROD.DATE	MODELS	DESCRIPTION	R/P	PART NUMBER	QTY	REV.REF.CODE FROM	REV.REF.CODE UP TO
FIG.	17-01 MANIFOLD						
	17110 MANIFOLD ASSY						
8008-8110	2F••FJ60••CND		*	17100-61052-	1	455	458
8008-8209	2F••FJ60••USA		#	17100-61081- (17100-61082-)	1	455	472
8209-	2F••FJ60••USA			17100-61082-	1	473	
	17110B UNION (FOR VENTILATION HOSE TO MANIFOLD)						
8008-8110	2F••FJ60••CND			90404-53035-	1	455	458
	17111 MANIFOLD, INTAKE						
8510-	2H••HJ60••ATM			17111-68050-	1	567	
8510-	2H••HJ60••MTM			17111-68022-	1	567	
8008-8110	3B••BJ60		#	17111-56060- (17111-56100-)	1	455	458
8110-8210	3B••BJ60		#	17111-56080- (17111-56130-)	1	459	466
8210-8510	3B••BJ60			17111-56130-	1	467	566
	17111B PLUG, NO.2						
8504-	2F••FJ60			90344-53011-	1		
8008-8110	2F••FJ60••CND				1	455	458
8210-8306	2F••FJ60••USA				1	467	
8306-8504	2F••FJ60••USA			90344-53002-	1		
	17141 MANIFOLD, EXHAUST						
8510-	2H••HJ60			17140-68010-	1	567	
8008-8210	3B••BJ60		#	17141-56030- (17141-56031-)	1	455	466
8210-8409	3B••BJ60		#	17141-56031- (17141-56050-)	1	467	
8409-8510	3B••BJ60			17141-56050-	1		566
	17141B COLLAR (FOR EXHAUST MANIFOLD)						
8209-	2F••FJ60••USA			90387-10055-	1	473	
	17141H PLUG, TIGHT (FOR EXHAUST MANIFOLD)						
8209-	2F••FJ60••USA			96411-12000-	1	473	

PROD.DATE	MODELS	DESCRIPTION	R/P	PART NUMBER	QTY	REV.REF.CODE FROM	REV.REF.CODE UP TO
	17146 RING, EXHAUST MANIFOLD						
8008-	2F..FJ60			17151-61010-	4	455	
8510-	2H..HJ60			17151-68010-	2	567	
	17147 SPRING, EXHAUST MANIFOLD						
8008-	2F..FJ60			17152-61010-	4	455	
	17151 BOLT, STUD (FOR MANIFOLD TO CARBURETOR)						
8008-	2F..FJ60			90116-08042-	4	455	
	17152 BOLT, STUD (FOR MANIFOLD TO EXHAUST PIPE)						
8008-8311	2F..FJ60			90116-10299-	3	455	
8311-	2F..FJ60			90116-10096-	3		
8008-8203	3B..BJ60	L=40,S=17& 17	#	90116-10055- (90116-10048-)	3	455	
8203-8408	3B..BJ60	L=40,S=19& 12		90116-10048-	3		
8408-	3B,2H..BJ60,HJ60			90116-10056-	3		
	17159 BOLT, STUD (FOR MANIFOLD TO CYLINDER HEAD)						
8008-8410	2F..FJ60			90116-12321-	2	455	
8410-	2F..FJ60			90116-12011-	2		
8510-	2H..HJ60	INTAKE MANIFOLD		90116-08131-	12	567	
8510-	2H..HJ60	EXHAUST MANIFOLD		90116-08188-	12	567	
8008-8108	3B..BJ60	EXHAUST MANIFOLD		92122-61028-	2	455	
8008-8204	3B..BJ60	INTAKE MANIFOLD		92132-60822-	8	455	458
8108-8406	3B..BJ60	EXHAUST MANIFOLD		90116-10048-	2		
8204-8409	3B..BJ60	INTAKE MANIFOLD		92132-60822-	3	459	
8406-8510	3B..BJ60	EXHAUST MANIFOLD		90116-10098-	2		566
8409-8510	3B..BJ60	INTAKE MANIFOLD		92132-60825-	5		566

PROD.DATE	MODELS	DESCRIPTION	R/P	PART NUMBER	QTY	REV.REF.CODE FROM	REV.REF.CODE UP TO
	17167 INSULATOR, EXHAUST MANIFOLD HEAT, NO.1						
8008-	2F..FJ60			17167-61012-	1	455	
8510-	2H..HJ60			17167-68010-	1	567	
8008-8411	3B..BJ60		#	17167-56020- (17167-56022-)	1	455	514
8411-8510	3B..BJ60			17167-56022-	1	515	566
	17168 INSULATOR, EXHAUST MANIFOLD HEAT, NO.2						
8008-	2F..FJ60			17168-61014-	1	455	
8510-	2H..HJ60			17168-68020-	1	567	
8411-8510	3B..BJ60			17168-58021-	1	515	566
	17169 INSULATOR, EXHAUST MANIFOLD HEAT, NO.3						
8008-	2F..FJ60			17169-61011-	1	455	
	17171 GASKET, INTAKE TO EXHAUST MANIFOLD						
8008-	2F..FJ60			17171-61010-	2	455	
8510-	2H..HJ60			17171-68011-	6	567	
	17172 GASKET, MANIFOLD TO CYLINDER HEAD						
8008-	2F..FJ60			17172-61030-	1	455	
8008-8110	3B..BJ60		#	17172-56020- (17172-56021-)	4	455	458
8110-8409	3B..BJ60		#	17172-56021- (17172-56022-)	1	459	
8409-8510	3B..BJ60			17172-56022-	1		566
	17173 GASKET, EXHAUST MANIFOLD TO HEAD						
8510-	2H..HJ60			17173-68010-	6	567	
8008-8208	3B..BJ60		#	17173-56020- (17173-56021-)	1	455	
8208-8301	3B..BJ60		#	17173-56021- (17173-56022-)	1		
8301-8409	3B..BJ60			17173-56022-	1		
8409-8510	3B..BJ60			17173-58010-	1		566
	17203 SHAFT SUB-ASSY, MANIFOLD HEAT CONTROL						
8008-8209	2F..FJ60			17232-61013-	1	455	472

PROD.DATE	MODELS	DESCRIPTION	R/P	PART NUMBER	QTY	REV.REF.CODE FROM	REV.REF.CODE UP TO
	17203 CONTINUED	SHAFT SUB-ASSY, MANIFOLD HEAT CONTROL					
8209-	2F••FJ60			17232-61014-	1	473	
	17203A	SPRING, COMPRESSION (FOR HEAT CONTROL SHAFT)					
8209-	2F••FJ60••USA			90501-08022-	1	473	
	17231	VALVE, MANIFOLD HEAT CONTROL					
8008-	2F••FJ60			17231-61012--	1	455	
	17231B	COIL, HEAT CONTROL VALVE					
8008-8209	2F••FJ60			90510-08001-	1	455	472
8209-	2F••FJ60			90510-08002-	1	473	

PROD.DATE	MODELS	DESCRIPTION	R/P	PART NUMBER	QTY	REV.REF.CODE FROM	REV.REF.CODE UP TO

(8008-)2F

(-8504)

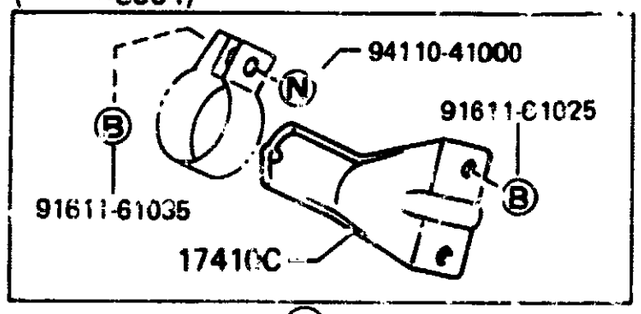

①

(8504-)

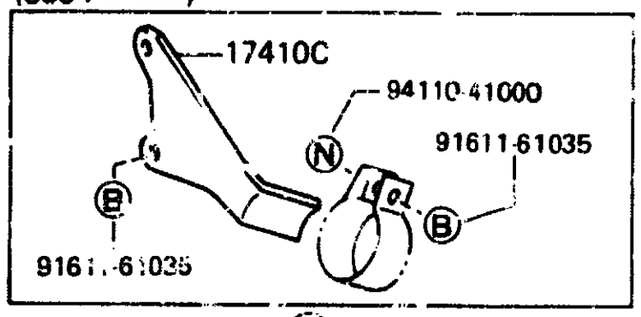

①

USA

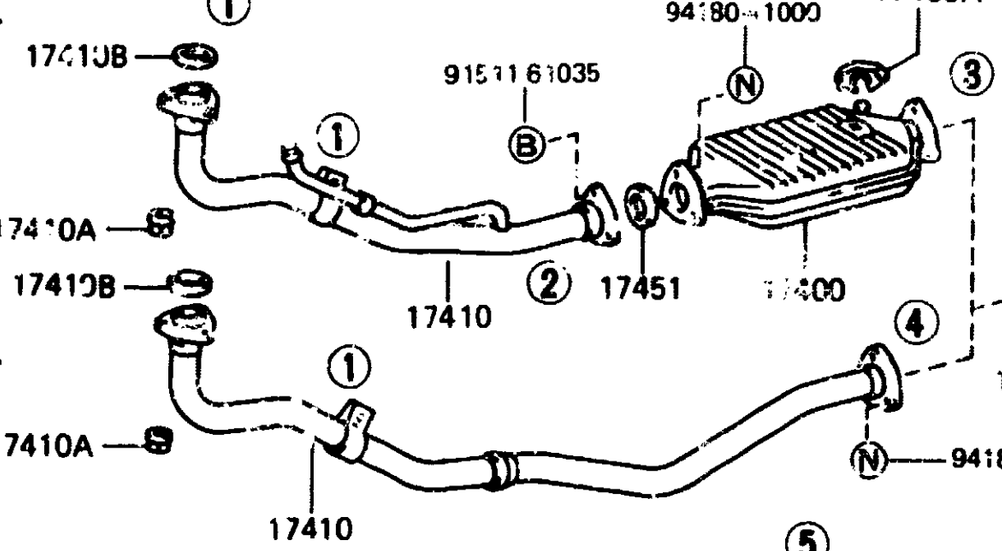

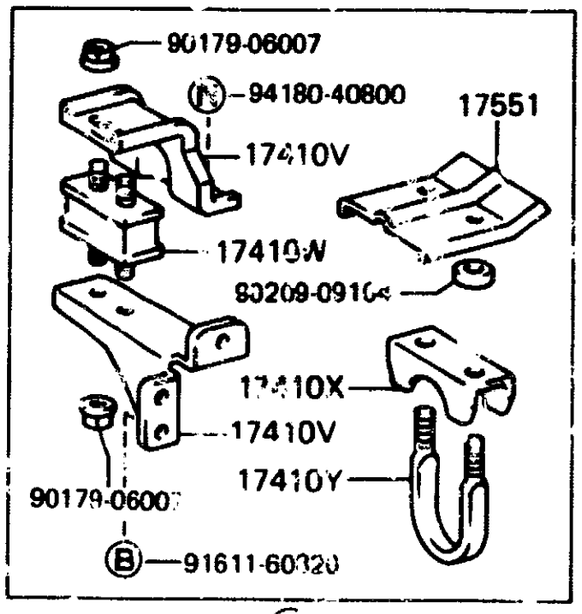

②

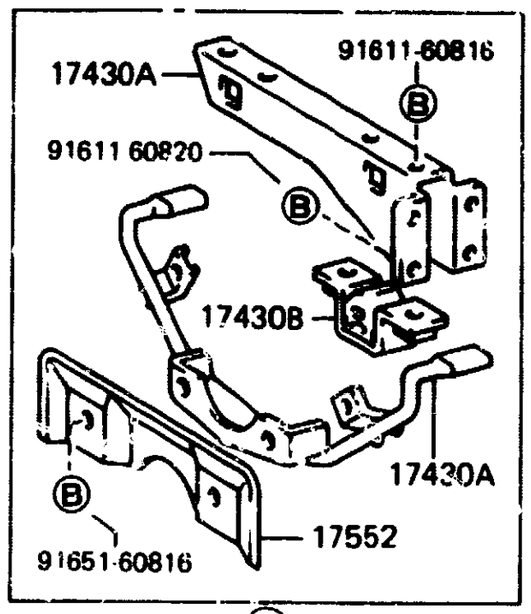

③

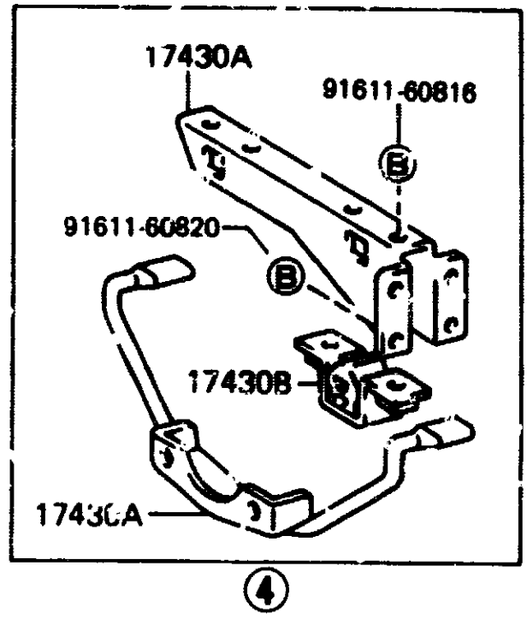

④

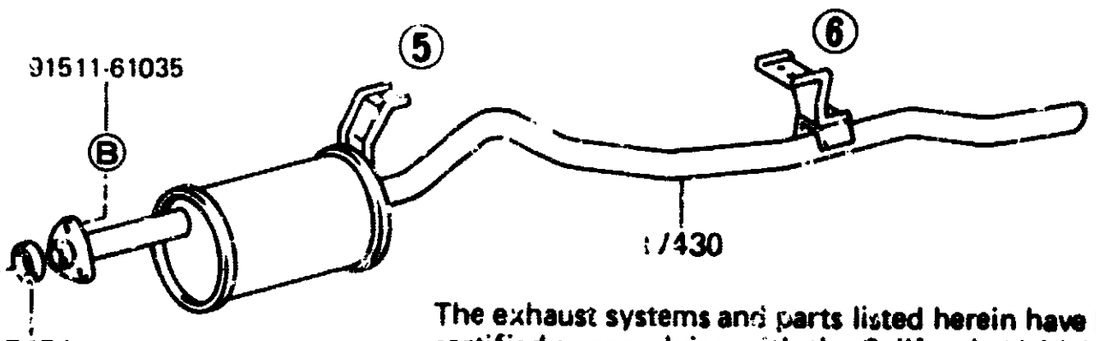

The exhaust systems and parts listed herein have been certified as complying with the California Vehicle and Administrative Codes Noise Regulation.

⑤

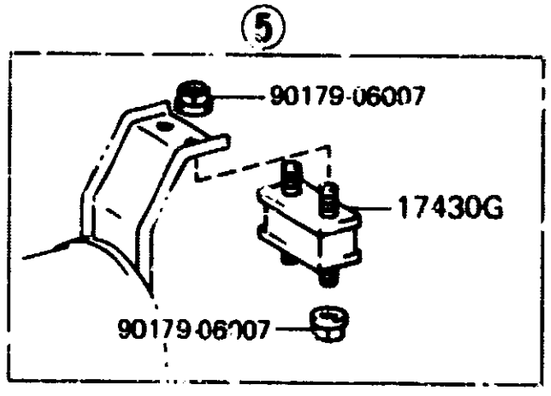

(-8504) ⑥

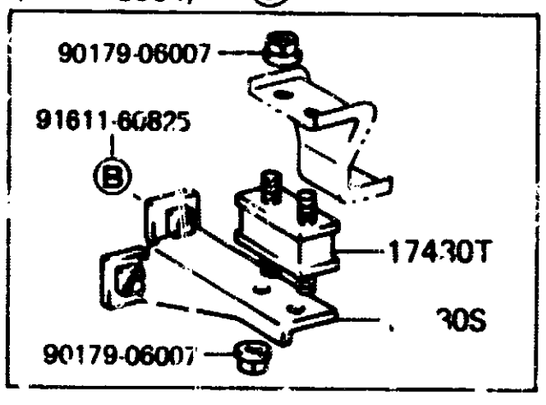

(8504-) ⑥

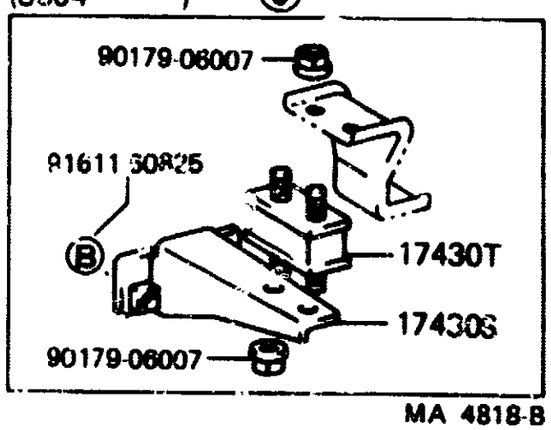

MA 4818-B

(8008-0510)3B

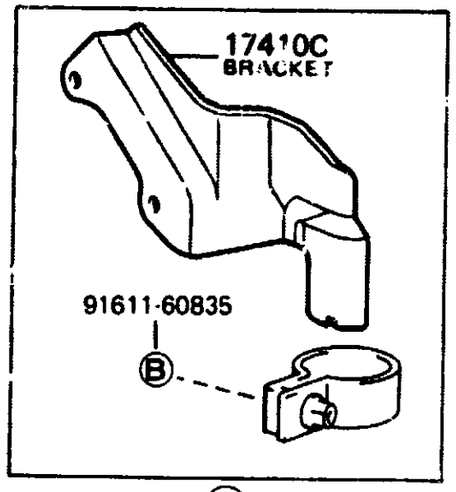

①

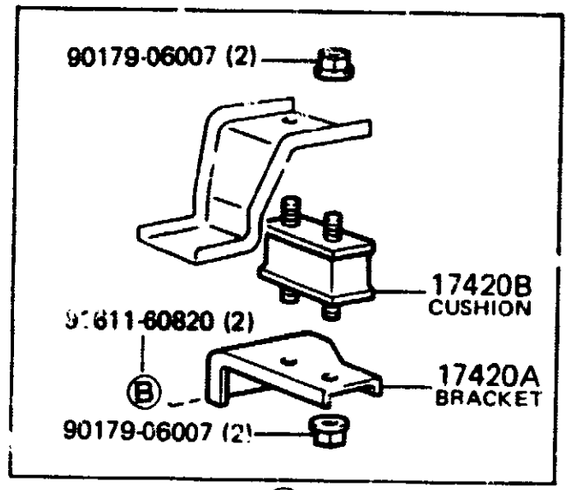

②

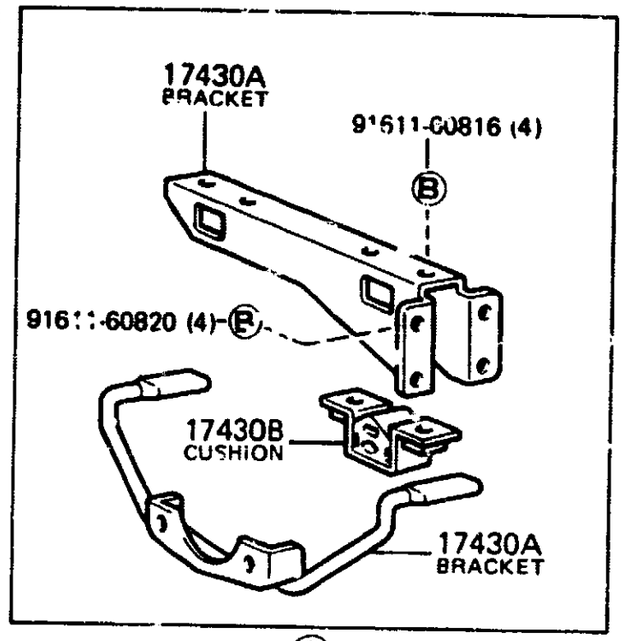

③

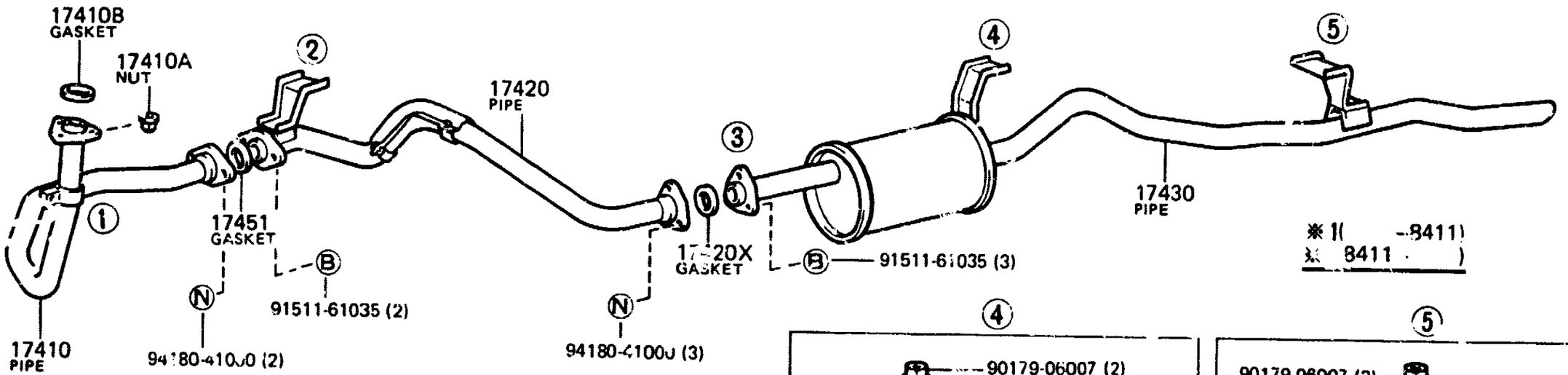

④

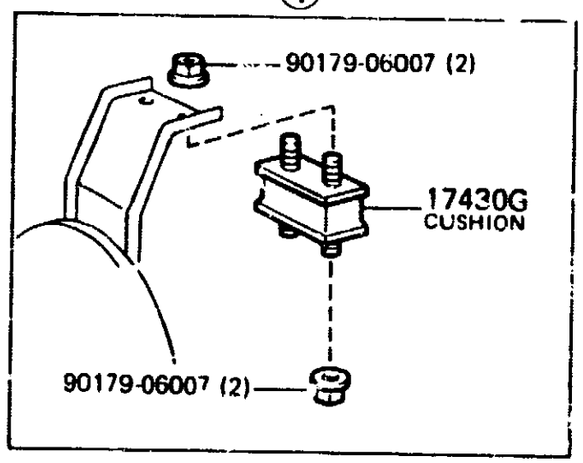

⑤

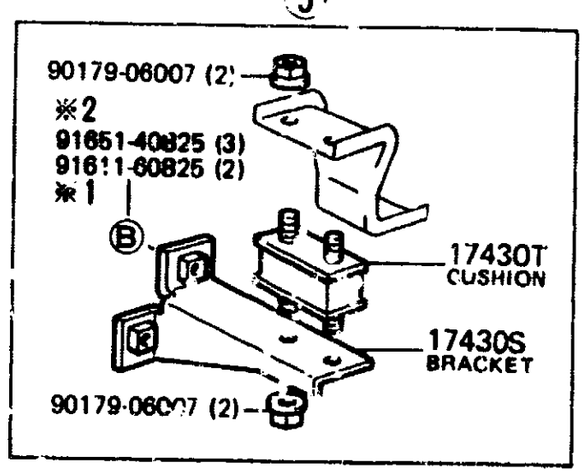

The exhaust systems and parts listed herein have been certified as complying with the California Vehicle and Administrative Codes Noise Regulation.

MA 8114

FIG.17-02 EXHAUST PIPE

1-A6

(8510-　　)2H

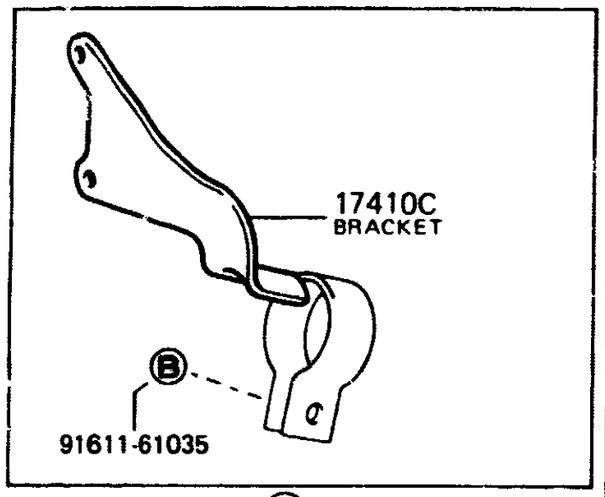

① MTM

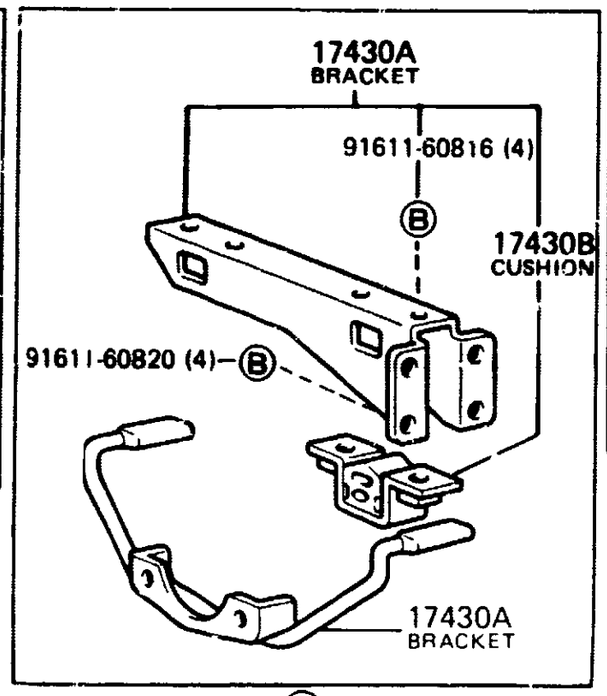

②

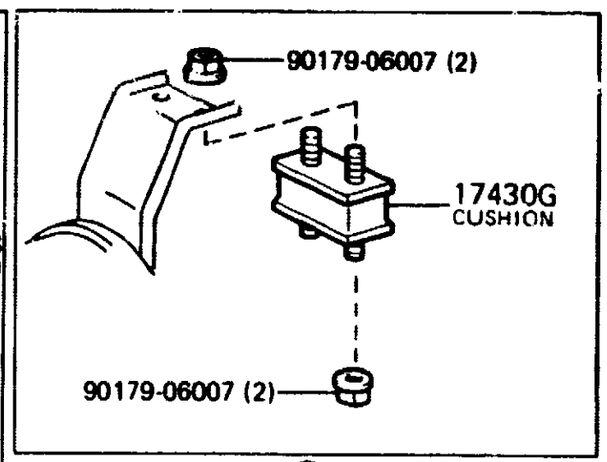

③

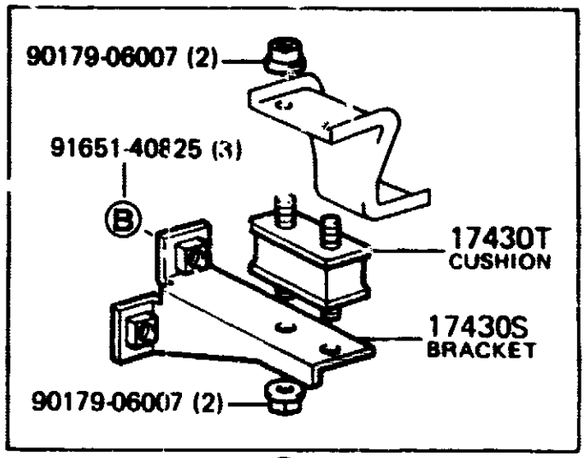

④

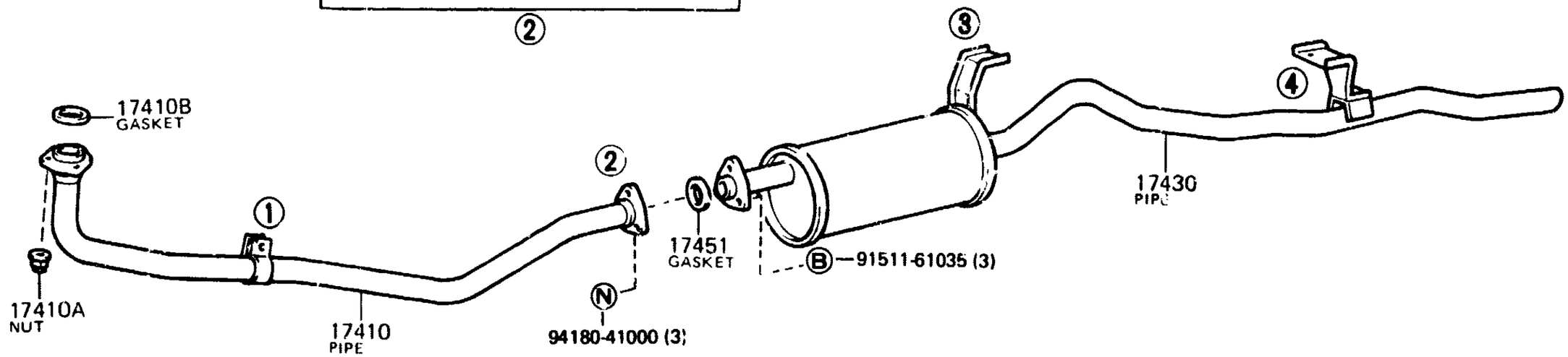

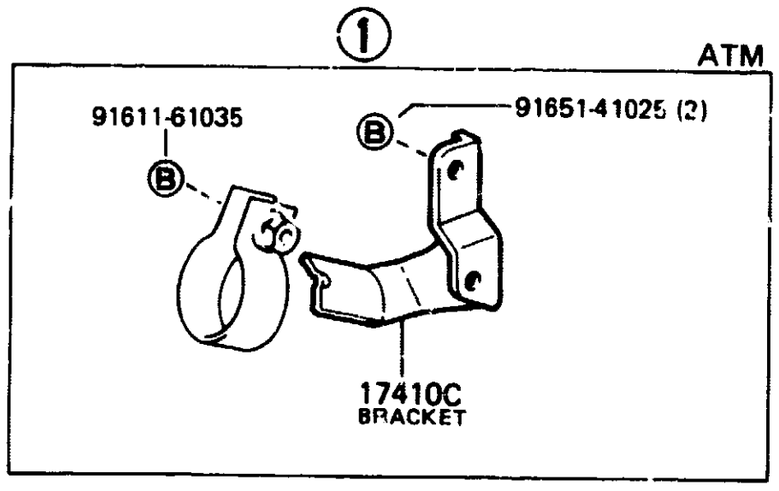

The exhaust systems and parts listed herein have been certified as complying with the California Vehicle and Administrative Codes Noise Regulation.

MA 8670

PROD.DATE	MODELS	DESCRIPTION	R/P	PART NUMBER	QTY	REV.REF.CODE FROM	REV.REF.CODE UP TO
FIG.	17-02 EXHAUST PIPE						
	17400 CONVERTER ASSY, W/CATALYST						
8604-	2F..FJ60			17400-61021-	1	573	
8008-8604	2F..FJ60..USA			17400-61020-	1	455	572
	17400A FLANGE, THERMOSENSER INLET						
8008-	2F..FJ60..USA			18491-61010-	1	455	
	17410 PIPE ASSY, EXHAUST, FRONT						
8504-	2F..FJ60			17410-61190-	1	555	
8008-8110	2F..FJ60..CND			17401-61120-	1	455	458
8008-8504	2F..FJ60..USA		#	17410-61160- (17410-61190-)	1	455	554
8510-	2H..HJ60			17401-68020-	1	567	
8008-8411	3B..BJ60			17401-56080-	1	455	514
8411-8510	3B..BJ60			17401-58050-	1	515	566
	17410A NUT, EXHAUST PIPE SET STUD BOLT						
8008-8411	3B,2F..BJ60,FJ60			90179-10010-	3	455	514
8411-	3B,2H,2F..BJ60,HJ60, FJ60			90179-10070-	3	515	
	17410B GASKET, EXHAUST PIPE						
8008-	2F..FJ60			90917-06003-	1	455	
8510-	2H..HJ60			90917-06005-	1	567	
8008-8510	3B..BJ60			90917-06012-	1	455	566
	17410C BRACKET, EXHAUST PIPE FRONT (FOR FRONT)						
8008-8504	2F..FJ60			17571-61090-	1	455	554
8504-	2F..FJ60			17571-61150-	1	555	
8510-	2H..HJ60..ATM			17571-68010-	1	567	
8510-	2H..HJ60..MTM			17571-68020-	1	567	
8008-8411	3B..BJ60			17571-56040-	1	455	514
8411-8510	3B..BJ60			17571-58090-	1	515	566
	17410V BRACKET, EXHAUST PIPE FRONT (FOR REAR)						
8008-	2F..FJ60..USA	U BOLT SIDE		17563-61030-	1	455	
8008-	2F..FJ60..USA	FRAME SIDE		17572-61040-	1	455	
	17410W CUSHION, EXHAUST PIPE FRONT (FOR REAR)						
8008-	2F..FJ60..USA			17567-61030-	1	455	
	17410X CLAMP NO.1, EXHAUST PIPE FRONT (FOR REAR)						
8008-	2F..FJ60..USA			90917-04006-	1	455	
	17410Y BOLT OR RING, EXHAUST PIPE FRONT (FOR REAR)						
8008-	2F..FJ60..USA			90117-08020-	1	455	
	17420 PIPE ASSY, EXHAUST, CENTER						
8008-8210	3B..BJ60		#	17420-56050- (17420-56051-)	1	455	466
8210-8411	3B..BJ60			17420-56051-	1	467	514
8411-8510	3B..BJ60			17420-58240-	1	515	566
	17420A BRACKET, EXHAUST PIPE CENTER (FOR FRONT)						
8008-8411	3B..BJ60			17572-56130-	1	455	514
8411-8510	3B..BJ60			17572-58050-	1	515	566
	17420J CUSHION, EXHAUST PIPE CENTER (FOR FRONT)						
8008-8510	3B..BJ60			17567-61030-	1	455	566
	17420X GASKET, EXHAUST PIPE (FOR CENTER)						
8008-8510	3B..BJ60			90917-06024-	1	455	566
	17430 PIPE ASSY, TAIL						
8008-8110	2F..FJ60..CND			17430-61160-	1	455	458
8008-	2F..FJ60..USA			17430-61170-	1	455	
8510-	2H..HJ60			17405-68060-	1	567	
8008-8210	3B..BJ60		#	17430-56260- (17430-56261-)	1	455	466
8210-8411	3B..BJ60			17430-56261-	1	467	514
8411-8510	3B..BJ60			17405-58050-	1	515	566

PROD.DATE	MODELS	DESCRIPTION	R/P	PART NUMBER	QTY	REV.REF.CODE FROM	REV.REF.CODE UP TO
	17430A BRACKET, TAIL PIPE (FOR FRONT)						
8008-	2F..FJ60..USA	CCO SUPPORT		17505-61060-	1	455	
8510-	2H..HJ60	PIPE SUPPORT		17505-61050-	1	567	
8510-	2H..HJ60	FRAME SIDE		17590-61051-	1	567	
8008-	3B,2F..BJ60,FJ60	FRAME SIDE		17583-61050-	1	455	
8008-8510	3B,2F..BJ60,FJ60..CND	PIPE SUPPORT		17505-61040-	1	455	566
	17430B CUSHION, TAIL PIPE (FOR FRONT)						
8008-	3B,2H,2F..BJ60,HJ60,FJ60			90917-04052-	2	455	
	17430G CUSHION, TAIL PIPE (FOR CENTER)						
8008-	3B,2H,2F..BJ60,HJ60,FJ60			17567-61030-	1	455	
	17430S BRACKET, TAIL PIPE (FOR REAR)						
8411-8504	2F..FJ60			17574-61050-	1		1100
8504-8604	2F..FJ60			17574-61060-	1	555	572
8604-	2F..FJ60			17574-61050-	1	573	
8008-8411	3B,2F..BJ60,FJ60				1	455	514
8411-	3B,2H..BJ60,HJ60			17574-61060-	1	515	
	17430T CUSHION, TAIL PIPE (FOR REAR)						
8008-	3B,2H,2F..BJ60,HJ60,FJ60			17567-61030-	1	455	
	17451 GASKET, EXHAUST PIPE						
8008-	2H,2F..HJ60,FJ60			90917-06024-	2	455	
8008-8510	3B..BJ60			90917-06012-	1	455	566
	17551 INSULATOR, EXHAUST PIPE HEAT, NO.1						
8008-	2F..FJ60..USA			17551-61030-	1	455	
	17552 INSULATOR, EXHAUST PIPE HEAT, NO.2						
8008-	2F..FJ60..USA			17552-61050-	1	455	

PROD.DATE	MODELS	DESCRIPTION	R/P	PART NUMBER	QTY	REV.REF.CODE FROM	REV.REF.CODE UP TO

FIG.17-03 AIR CLEANER

1-D6

MR4-11-0389

(8008-)2F

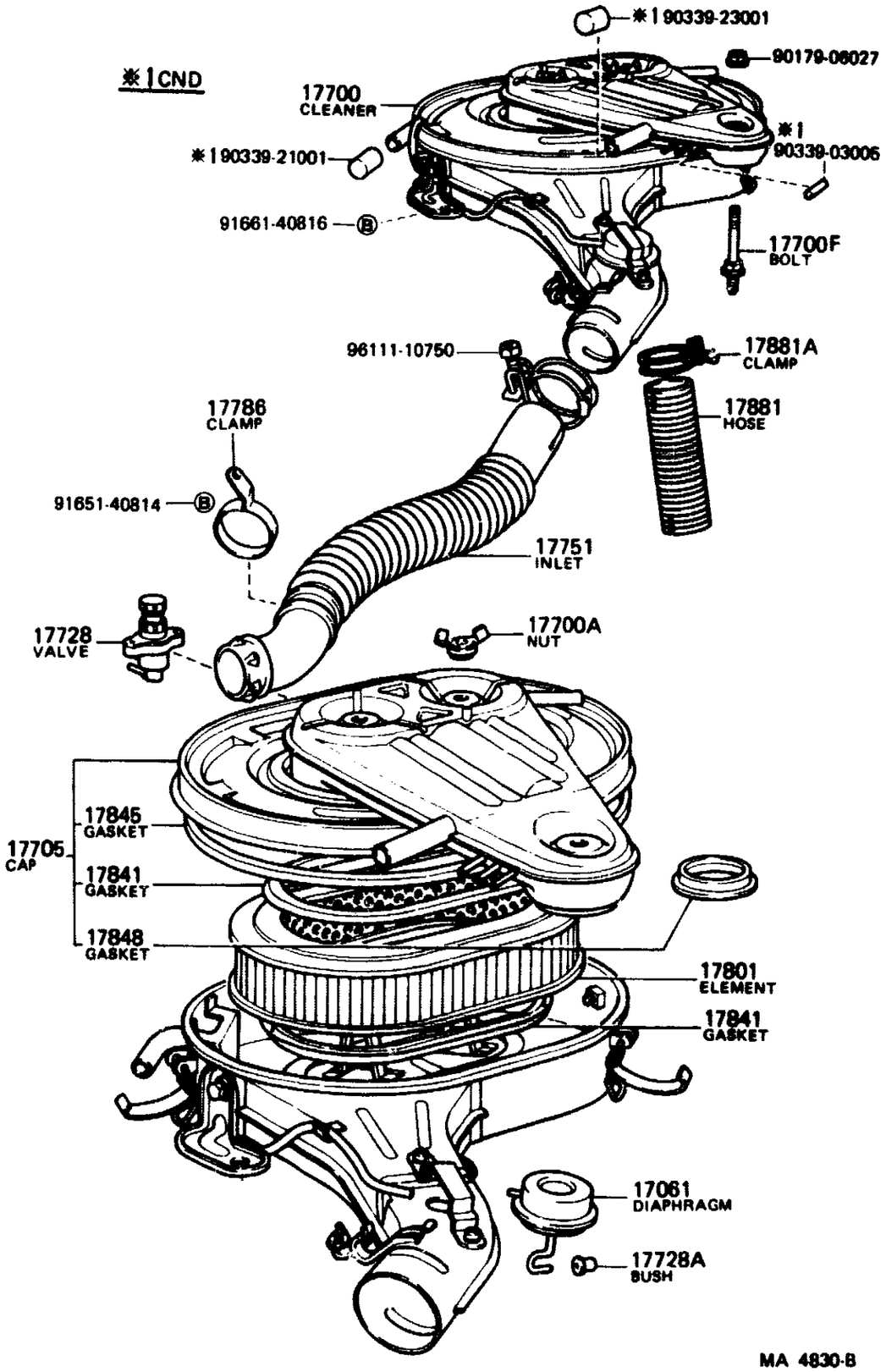

MA 4830-B

(8008-8411)3B

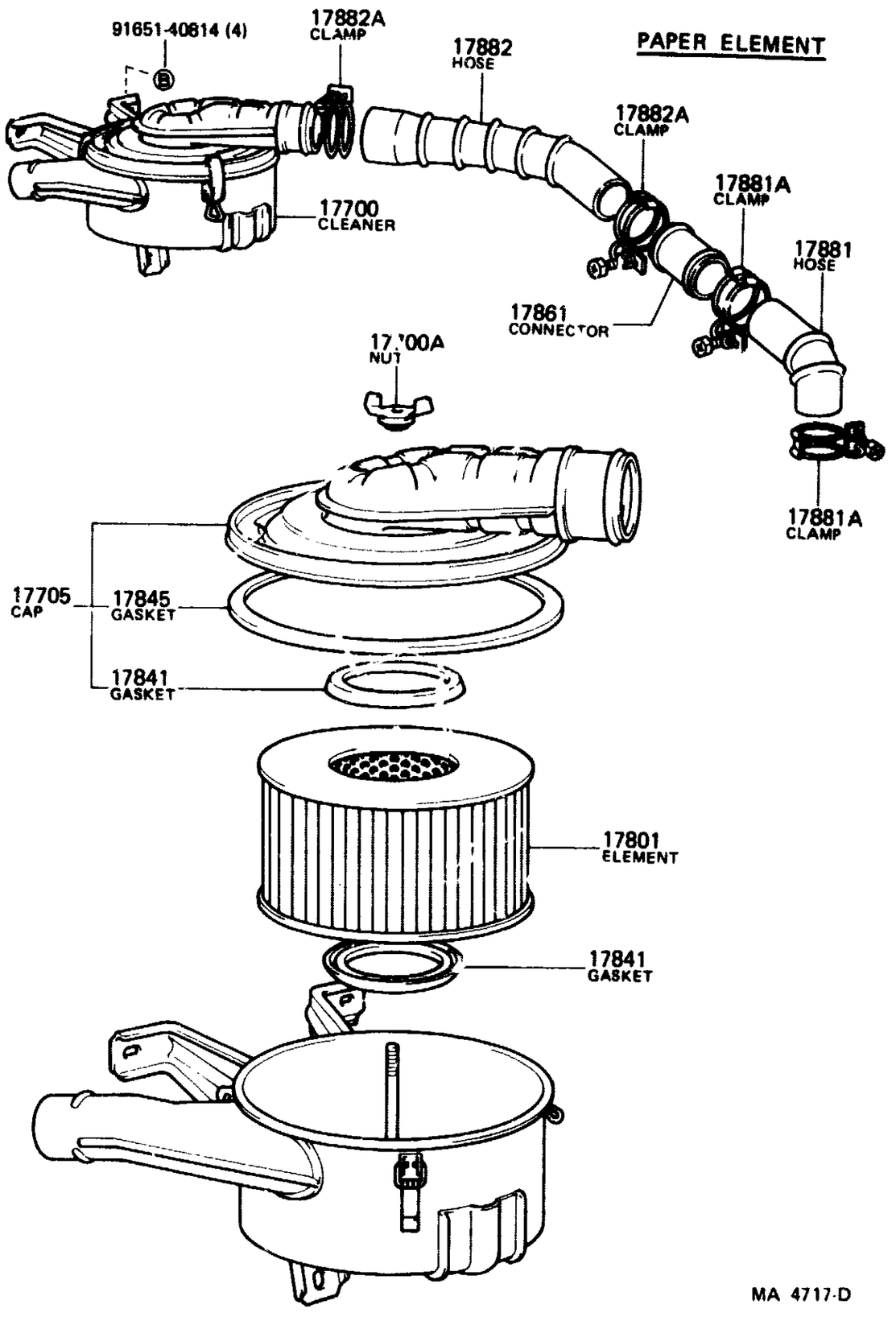

MA 4717-D

FIG.17-03 AIR CLEANER

1-E6

MR4-11-0390

(8411-8510)3B

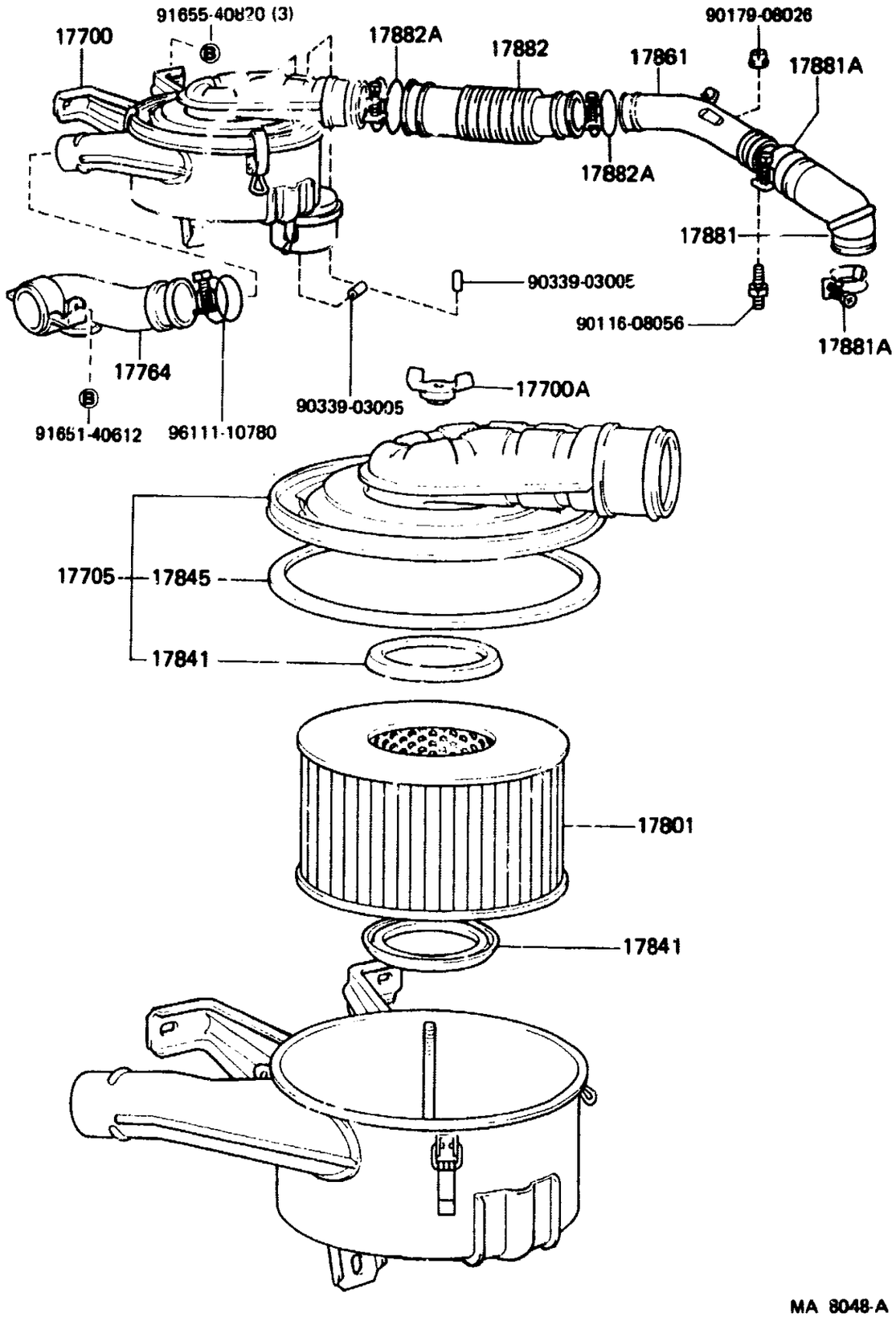

MA 8048-A

(8510-)2H

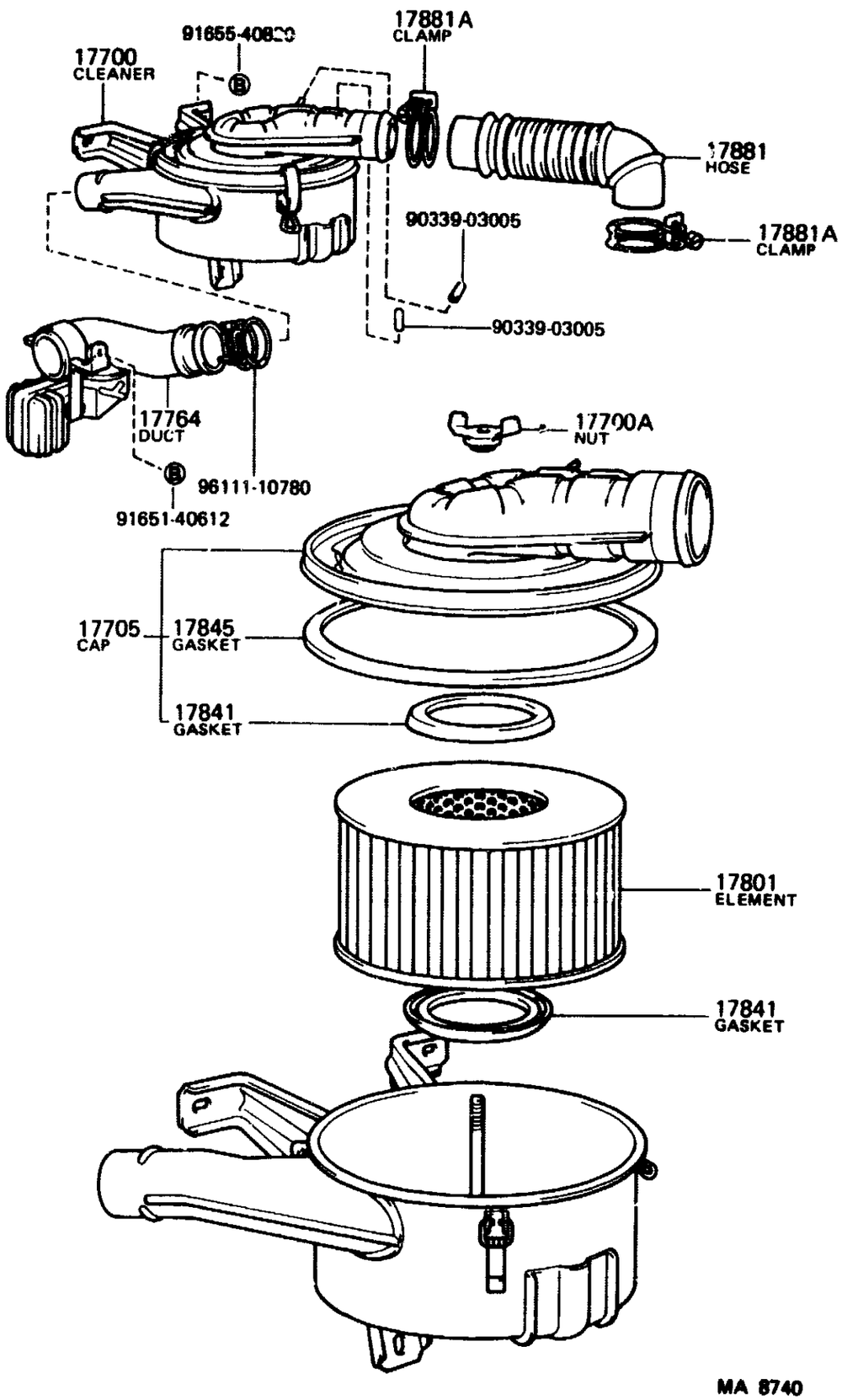

MA 8740

	PROD.DATE	MODELS	DESCRIPTION	R/P	PART NUMBER	QTY	REV.REF.CODE FROM	REV.REF.CODE UP TO
	FIG.	17-03 AIR CLEANER						
		17061	DIAPHRAGM SUB-ASSY					
	8008-	2F..FJ60			17061-61020-	1	455	
		17700	CLEANER ASSY, AIR					
	8008-	2F..FJ60			17700-61023-	1	455	
C	8510-8608	2H..HJ60			17700-68140-	1	567	600
C	8608-	2H..HJ60			17700-68210-	1	601	
	8008-8210	3B..BJ60			# 17700-68010- (17700-68011-)	1	455	466
	8210-8411	3B..BJ60			# 17700-68011- (17700-68140-) •(90339-03005-)	1	467	514
	8411-8510	3B..BJ60			17700-68140-	1	515	566
		17700A	NUT, WING (FOR AIR CLEANER)					
	8008-	2F..FJ60			90175-06003-	2	455	
	8008-	3B,2H..BJ60,HJ60			90175-08008-	1	455	
		17700F	BOLT, STUD (FOR AIR CLEANER SETTING)					
	8008-	2F..FJ60			90116-06018-	1	455	
		17705	CAP SUB-ASSY, AIR CLEANER					
	8008-	2F..FJ60			17705-61023-	1	455	
	8008-8411	3B..BJ60			# 17705-68010- (17705-68100-) •(90339-03005-)	1	455	514
	8411-	3B,2H..BJ60,HJ60			17705-68100-	1	515	
		17728	VALVE, THERMOSTATIC					
	8008-	2F..FJ60			17728-24030-	1	455	
		17728A	BUSH					
	8008-	2F..FJ60			90386-03001-	1	455	
		17751	INLET, AIR CLEANER, NO.1					
	8008-	2F..FJ60			17751-61030-	1	455	

	PROD.DATE	MODELS	DESCRIPTION	R/P	PART NUMBER	QTY	REV.REF.CODE FROM	REV.REF.CODE UP TO
		17764	DUCT, AIR CLEANER					
	8411-8510	2F..FJ60			53809-90A00-	1	515	566
	8510-	2H..HJ60			53207-90A01-	1	567	
	8008-8510	3B..BJ60			53207-90A00-	1	455	566
		17786	CLAMP, AIR CLEANER					
	8008-	2F..FJ60			17781-61010-	1	455	
		17801	ELEMENT SUB-ASSY, AIR CLEANER FILTER					
	8008-	2F..FJ60			17801-61010-	1	455	
	8008-8210	3B..BJ60			# 17801-66020- (17801-68020-)	1	455	466
	8210-	3B,2H..BJ60,HJ60			17801-68020-	1	467	
		17841	GASKET, FILTER ELEMENT					
	8008-	2F..FJ60			17841-61011-	2	455	
	8008-	3B,2H..BJ60,HJ60			17841-68010-	2	455	
		17845	GASKET, AIR CLEANER CAP					
	8008-	2F..FJ60			17845-61011-	1	455	
	8008-8210	3B..BJ60			# 17845-68010- (17845-61011-)	1	455	
	8210-	3B,2H..BJ60,HJ60	XG,L=933		17845-61011-	1		
		17848	GASKET, AIR CLEANER TO CARBURETOR					
	8008-	2F..FJ60			17848-61020-	1	455	
		17861	CONNECTOR, INTAKE AIR					
	8008-8411	3B..BJ60			17885-56010-	1	455	514
	8411-8510	3B..BJ60			17885-58070-	1	515	566
		17881	HOSE, AIR CLEANER, NO.1					
	8008-	2F..FJ60			17881-61010-	1	455	
	8510-	2H..HJ60			17881-68010-	1	567	
	8008-8411	3B..BJ60			17881-58010-	1	455	514
	8411-8510	3B..BJ60			17881-58090-	1	515	566

* G,L=Cut gasket to length as specified in remarks

PROD.DATE	MODELS	DESCRIPTION	R/P	PART NUMBER	QTY	REV.REF.CODE FROM	REV.REF.CODE UP TO
	17881A CLAMP (FOR AIR CLEANER HOSE, NO.1)						
8008-	2F..FJ60			96111-10650-	1	455	
8510-	2H..HJ60	VENTURI SIDE		96111-10780-	1	567	
8510-	2H..HJ60	AIR CLEANER SIDE		96111-10830-	1	567	
8008-8411	3B..BJ60			96111-10690-	2	455	514
8411-8510	3B..BJ60			96111-10710-	2	515	566
	17882 HOSE, AIR CLEANER, NO.2						
8008-8411	3B..BJ60			17882-58010-	1	455	514
8411-8510	3B..BJ60			17882-58070-	1	515	566
	17882A CLAMP (FOR AIR CLEANER HOSE, NO.2)						
8008-8411	3B..BJ60	CONNECTOR, ID=69		96111-10690-	1	455	514
8008-8510	3B..BJ60	AIR CLEANER SIDE, ID=83		96111-10830-	1	455	566
8411-8510	3B..BJ60	CONNECTOR SIDE, ID=71		96111-10710-	1	515	566

PROD.DATE	MODELS	DESCRIPTION	R/P	PART NUMBER	QTY	REV.REF.CODE FROM	REV.REF.CODE UP TO

FIG•17-05 AIR PUMP

(8008-　　)2F••USA

V-belt Application Chart

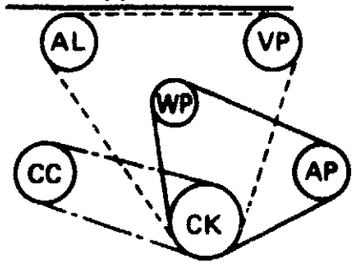

	P.N.C.	FIG. NO.
———	17610B	17-05
•••••••	44310A	45-03
—·—	88310A	87-19

AL : Alternator　　CK : Crankshaft
CC : Cooler Conpressor　　VP : Vane Pump
WP : Water Pump　　AP : Air Pump

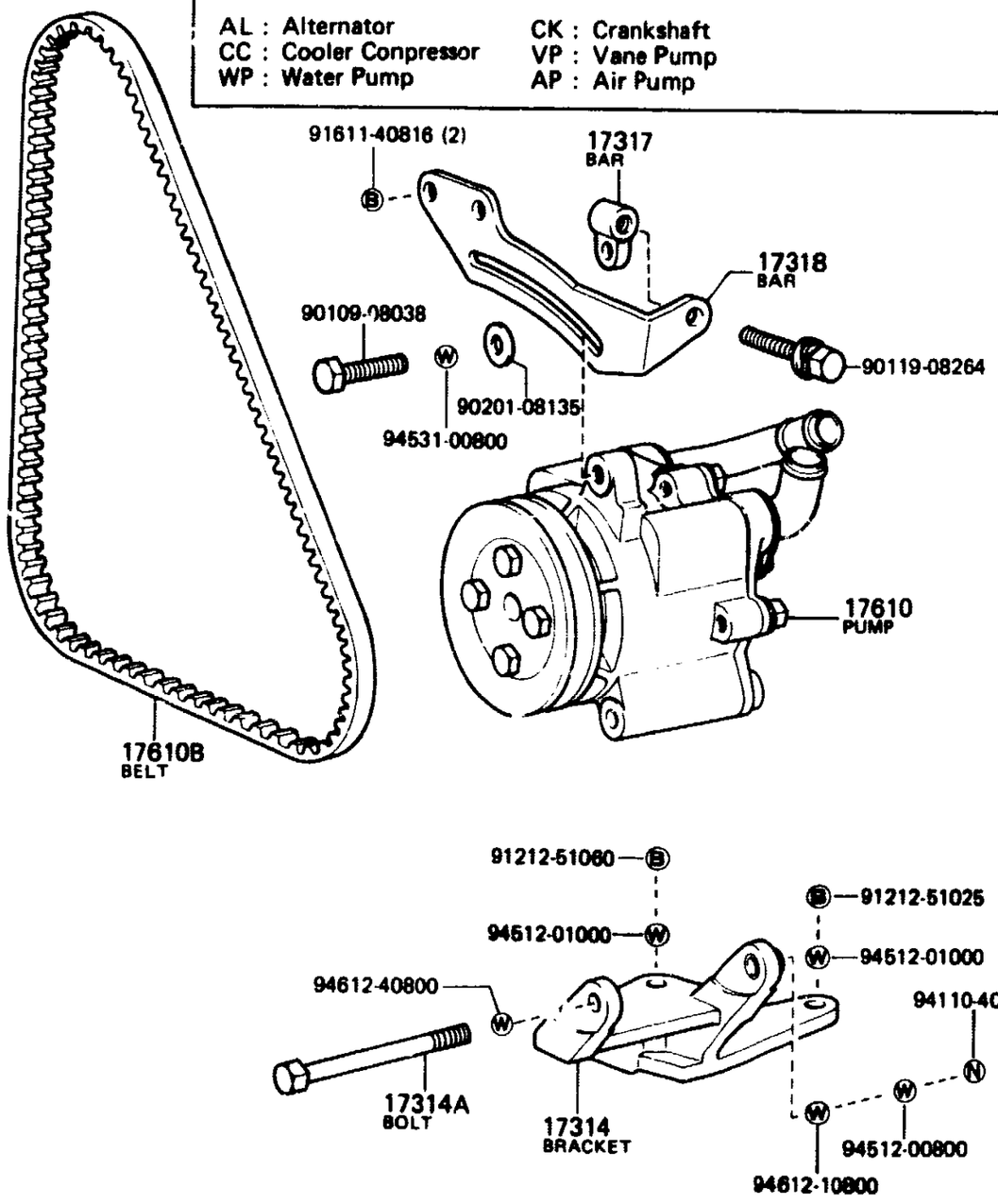

MA 4834-D

GENUINE TOYOTA PARTS

PROD.DATE	MODELS	DESCRIPTION	R/P	PART NUMBER	QTY	REV.REF.CODE FROM	REV.REF.CODE UP TO
FIG•	17-05 AIR PUMP						
	17314 BRACKET, AIR PUMP						
8008-	2F••FJ60••USA			17314-61031-	1	455	
	1731-4 BOLT, HEXAGON (FOR AIR PUMP BRACKET SETTING)						
8008-	2F••FJ60••USA			90101-08041-	1	455	
	17317 BAR, AIR PUMP ADJUSTING NO•1						
8008-	2F••FJ60••USA			17317-61020-	1	455	
	17318 BAR, AIR PUMP ADJUSTING NO•2						
8008-	2F••FJ60••USA			17318-61040-	1	455	
	17610 PUMP ASSY, AIR						
8008-	2F••FJ60••USA			17610-61030-	1	455	
	17610B BELT, V (F AIR PUMP)						
8008-	2F••FJ60••USA			99343-11120-	1	455	

FIG.17-06 MANIFOLD AIR INJECTION SYSTEM

1-I6

MR4-13-0206

(8008-)2F..USA

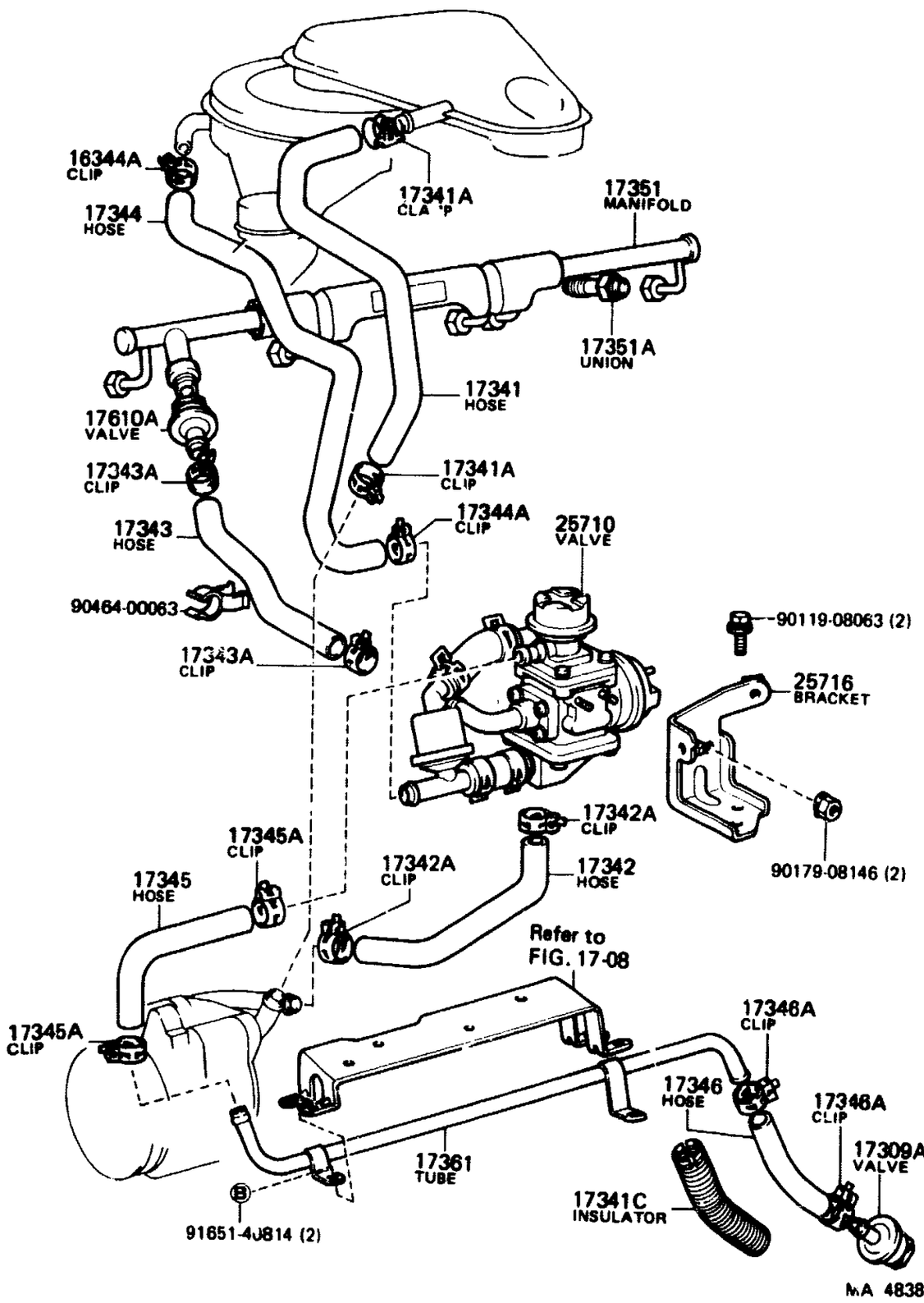

GENUINE TOYOTA PARTS

	PROD.DATE	MODELS	DESCRIPTION	R/P	PART NUMBER	QTY	REV.REF.CODE FROM	REV.REF.CODE UP TO
	FIG.	17-06 MANIFOLD A.R INJECTION SYSTEM						
		17309A VALVE, CHECK						
	8008-	2F..FJ60..USA			90917-10057-	1	455	
		17341 HOSE, NO.1 (FOR AIR INJECTION SYSTEM)						
	8008-	2F..FJ60..USA			17341-61021-	1	455	
		17341A CLAMP OR CLIP, NO.1 (FOR AIR INJECTION SYSTEM HOSE, NO.1)						
	8008-8010	2F..FJ60..USA	CLEANER SIDE		96112-10380-	1	455	
C	8010-8608	2F..FJ60..USA	CLEANER SIDE		96111-10380-	1		600
	8008-	2F..FJ60..USA	AIR PUMP SIDE		90467-31001-	1	455	
C	8608-	2F..FJ60..USA	CLEANER SIDE		96111-10360-	1	595	
		17341C INSULATOR, AIR INJECTION HOSE						
	8008-	2F..FJ60..USA			17881-34040-	1	455	
		17342 HOSE, NO.2 (FOR AIR INJECTION SYSTEM)						
	8008-	2F..FJ60..USA			17342-61030-	1	455	
		17342A CLAMP OR CLIP, NO.2 (FOR AIR INJECTION SYSTEM HOSE, NO.2)						
	8008-	2F..FJ60..USA			90467-28003-	2	455	
		17343 HOSE, NO.3 (FOR AIR INJECTION SYSTEM)						
	8008-	2F..FJ60..USA			17343-61020-	1	455	
		17343A CLAMP OR CLIP, NO.3 (FOR AIR INJECTION SYSTEM HOSE, NO.3)						
	8008-	2F..FJ60..USA			90467-28003-	2	455	
		17344 HOSE, NO.4 (FOR AIR INJECTION SYSTEM)						
	8008-	2F..FJ60..USA			17344-61011-	1	455	
		17344A CLAMP OR CLIP, NO.4 (FOR AIR INJECTION SYSTEM HOSE, NO.4)						
	8008-	2F..FJ60..USA			90467-28003-	2	455	

PROD.DATE	MODELS	DESCRIPTION	R/P	PART NUMBER	QTY	REV.REF.CODE FROM	REV.REF.CODE UP TO
	17345 HOSE, NO.5 (FOR AIR INJECTION SYSTEM)						
8008-	2F..FJ60..USA			17345-61020-	1	455	
	17345A CLAMP OR CLIP, NO.5 (FOR AIR INJECTION SYSTEM HOSE, NO.5)						
8008-	2F..FJ60..USA			90467-28001-	2	455	
	17346 HOSE, NO.6 (FOR AIR INJECTION SYSTEM)						
8008-	2F..FJ60..USA			17346-61020-	1	455	
	17346A CLAMP OR CLIP, NO.6 (FOR AIR INJECTION SYSTEM HOSE, NO.6)						
8008-	2F..FJ60..USA			90467-28001-	2	455	
	17351 MANIFOLD, AIR INJECTION						
8008-	2F..FJ60..USA			17306-61021-	1	455	
	17351A UNION, AIR INJECTION						
8008-	2F..FJ60..USA			90404-14329-	6	455	
	17361 TUBE, AIR						
8008-	2F..FJ60..USA			17361-61020-	1	455	
	17610A VALVE, CHECK (FOR AIR INJECTION SYSTEM)						
8008-	2F..FJ60..USA			90917-10057-	1	455	
	25710 VALVE ASSY, AIR SWITCHING						
8008-	2F..FJ60..USA			25710-61021-	1	455	
	25716 BRACKET, AIR SWITCHING VALVE						
8008-	2F..FJ60..USA			25716-61011-	1	455	

PROD.DATE	MODELS	DESCRIPTION	R/P	PART NUMBER	QTY	REV.REF.CODE FROM	REV.REF.CODE UP TO

Based on the serial number established per hose type, they are supplied in the following lengths:

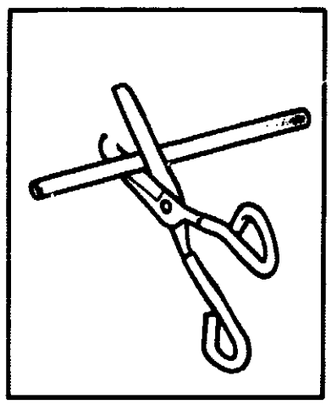

less than 300mm – 300mm
greater than 301mm but less than 600mm – 600mm
greater than 601mm but less than 950mm – 950mm

Cut appropriate hose to exact specifications.

〈 Part Number Composition 〉

95411 – 10130
- hose serial number (✱ = 99)
- length (cm)

ex.
95411 – 10130..part number
(L=220) .....exact specification (mm)

AAP	Auxilary Acceleration Pump		
ABV	Air By-pass Valve	VCV	Vacuum Control Valve
ASV	Air Switching Valve	TP	Throttle Positioner
Carb.	Carburetor	Th. O	Throttle Opener
Ch. B	Choke Braker	S/W	Switch
Ch. O	Choke Opener		
Dist.	Distributor		
HIC	Hot Idle Compensator		
VSV	Vacuum Switching Valve		

90413-04005	90414-04001	90414-04002		
90464-00074	90464-00081	90464-00082		

VTV Identification Chart

• VTV External Appearance

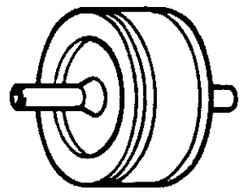

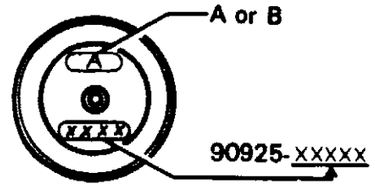

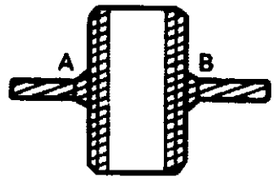

• Volume and Color

Volume (cc/min)	25	50	100	140	200	400	800	1600
COLOR	RED	GREEN	YELLOW	WHITE	DARK BLUE	BROWN	GRAY	PURPLE

Volume (cc/min)	COLOR			PART NUMBER
	A	BODY	B	
25	Red	Black	Black	90925-01006
50	Green	White	"	" -01029
70	"	"	"	" -01031
100	Yellow	Black	"	" -01005
"	"	White	"	" -01027
"	"	"	"	" -01032
140	White	"	"	" -01019
200	Dark Blue	"	"	" -01021
400	Brown	Black	"	" -01009
800	Gray	White	"	" -01041
1600	Purple	"	"	" -01015
100-800	Yellow	Black	Gray	90925-01024
140-340	White	Green	Dark Blue	" -01042
200-800	Dark Blue	Black	Gray	" -01026
400-800	Brown	"	"	" -01023

MA 9502

FIG.17-08 VACUUM PIPING

1-L6

MR4-11-0392

(8008-)2F..USA

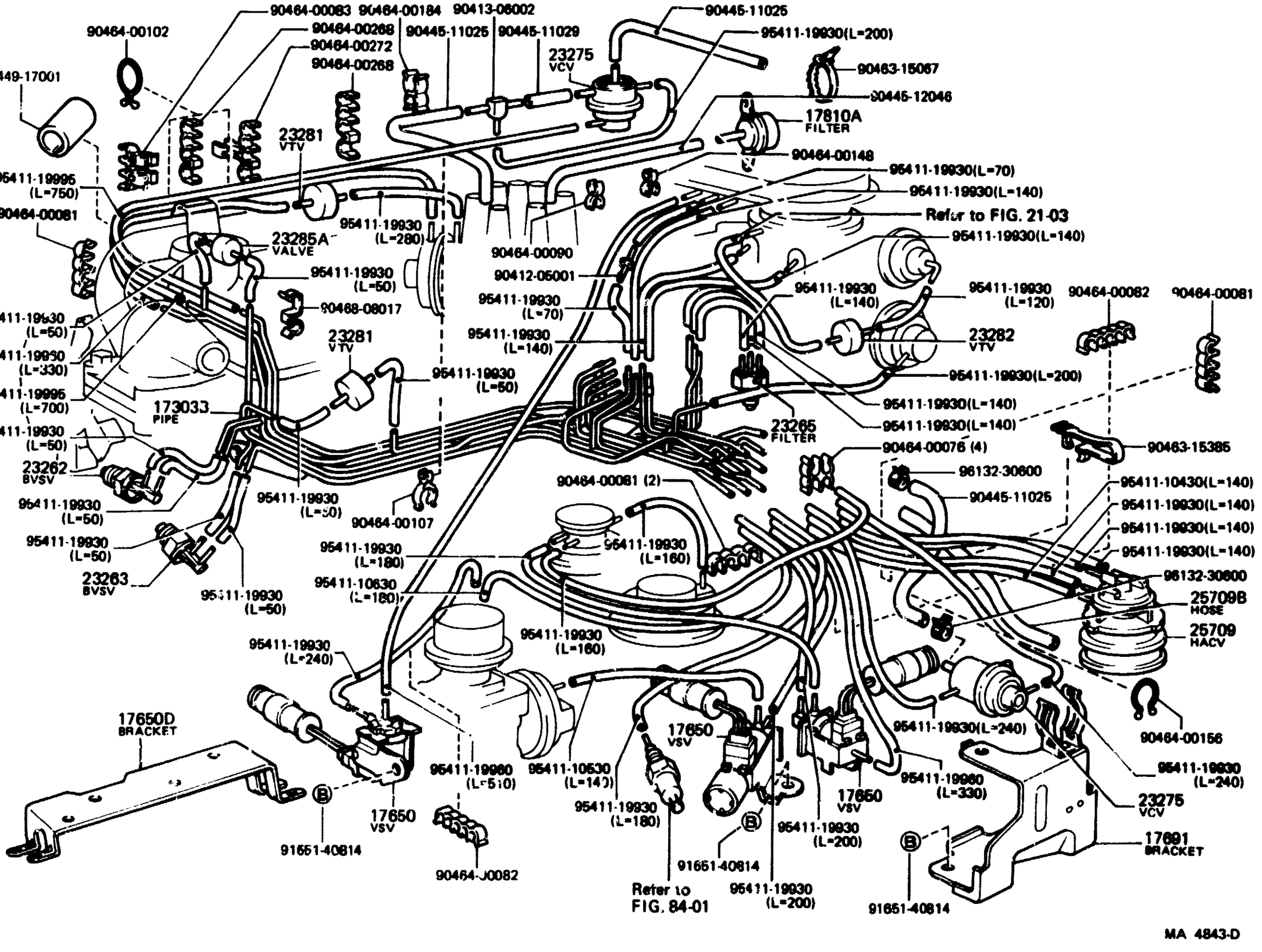

(8008-8110)2F••CND

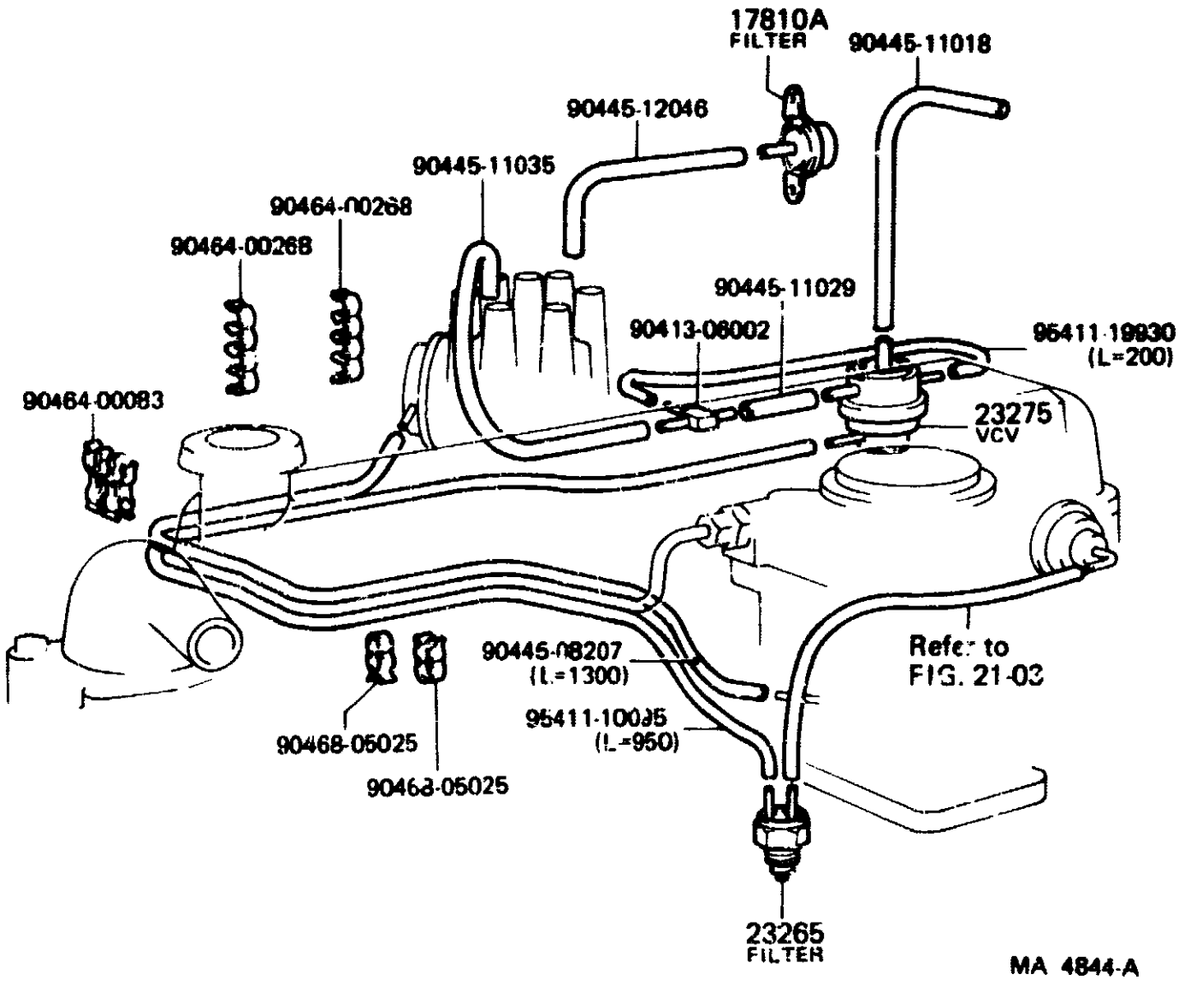

MA 4844-A

(8510-)2H••AFM

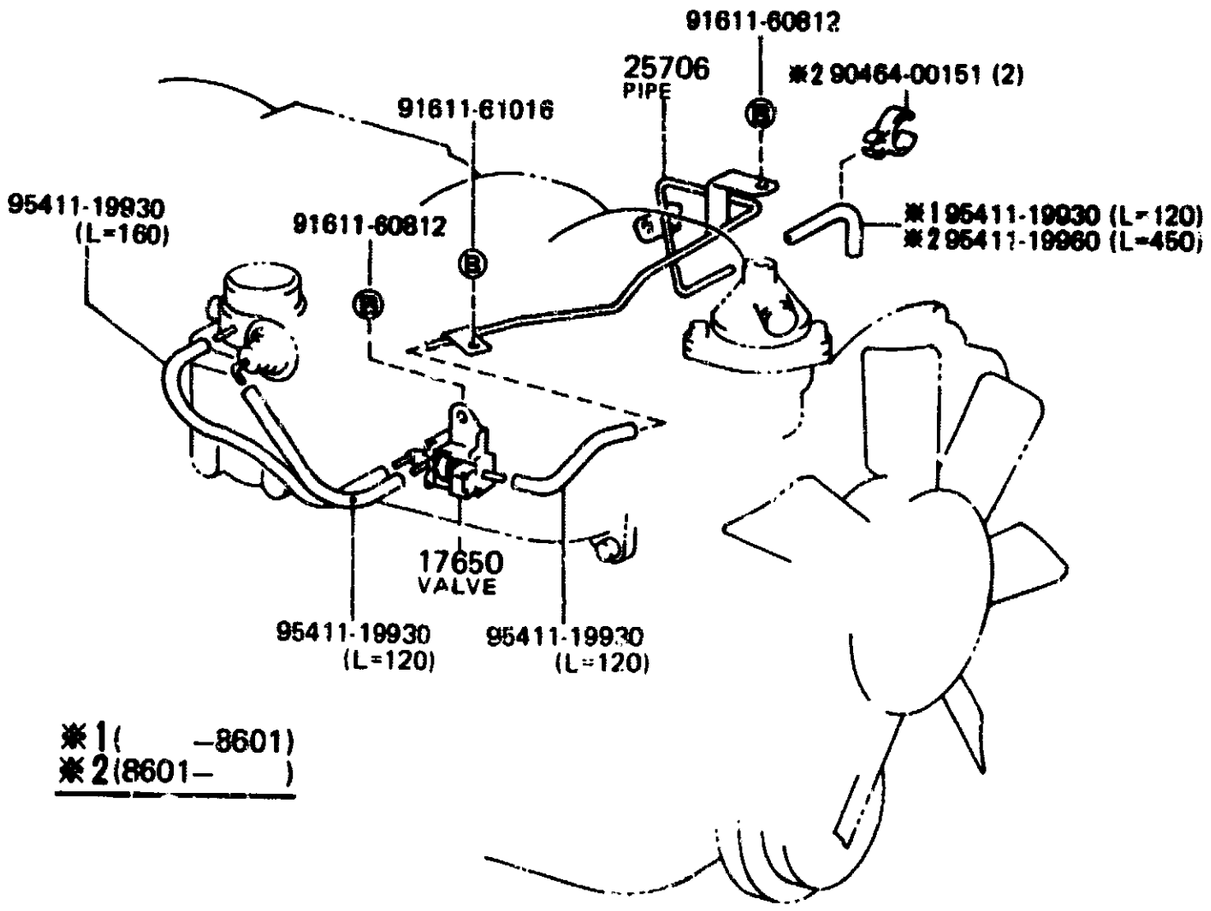

※1(-8601)
※2(8601-)

MA 8941

PROD.DATE	MODELS	DESCRIPTION	R/P	PART NUMBER	QTY	REV.REF.CODE FROM	REV.REF.CODE UP TO
FIG.	17-08 VACUUM PIPING						
	17303B PIPE SUB-ASSY, AIR, NO.1						
8003-	2F..FJ60..USA			17303-61011-	1	455	
	17650 VALVE ASSY, VACUUM SWITCHING						
8008-	2F..FJ60..USA	AI		89570-60050-	1	455	
8008-	2F..FJ60..USA	EGR		89570-60060-	1	455	
8008-	2F..FJ60..USA	CCO AI		89570-60070-	1	455	
8510-	2H..HJ60..ATM			90910-12033-	1	567	
	17650D BRACKET, VACUUM SWITCHING VALVE						
8008-	2F..FJ60..USA			17692-61010-	1	455	
	17691 BRACKET, VACUUM CONTROL VALVE, NO.1						
8008-	2F..FJ60..USA			17691-61011-	1	455	
	17810A FILTER ASSY, AIR						
8008-	2F..FJ60			17810-61010-	1	455	
	23262 VALVE, BIMETAL VACUUM SWITCHING, NO.1						
8008-	2F..FJ60..USA			90925-05035-	1	455	
	23263 VALVE, BIMETAL VACUUM SWITCHING, NO.2						
8008-	2F..FJ60..USA			90925-05046-	1	455	
	23265 FILTER, GAS, NO.1						
8008-8110	2F..FJ60..CND			90917-11023-	1	455	458
8008-	2F..FJ60..USA			90917-11024-	1	455	
	23275 VALVE, VACUUM CONTROL, NO.1						
8008-	2F..FJ60			90925-03058-	2	455	
	23281 VALVE, VACUUM TRANSMITTING, NO.1						
8008-	2F..FJ60..USA			90925-01021-	2	455	
	23282 VALVE, VACUUM TRANSMITTING, NO.2						
8008-	2F..FJ60..USA			90925-01029-	1	455	
	23285A VALVE, CHECK, NO.1						
8008-	2F..FJ60..USA			90917-10038-	1	455	
	25706 PIPE SUB-ASSY, VACUUM TRANSMITTING, NO.1						
8510-	2H..HJ60..ATM			25706-68010-	1	567	
	25709 VALVE SUB-ASSY, HIGH ALTITUDE COMPENSATOR						
8008-	2F..FJ60..USA			25709-61010-	1	455	
	25709B HOSE (FOR HIGH ALTITUDE COMPENSATOR VALVE)						
8008-	2F..FJ60..USA			90445-12905-	1	455	

FIG.17-09 CAUTION PLATE & NAME PLATE

(8008-)

11293
PLATE

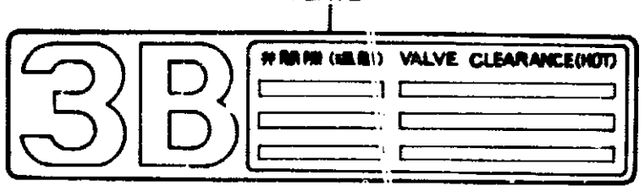

11294
PLATE

17700C
PLATE

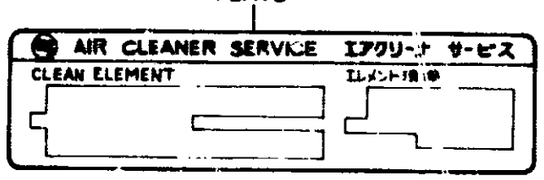

※(-9110) CND

※ 17700D
PLATE

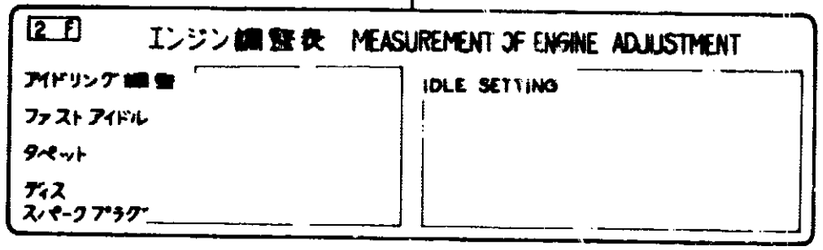

11298
PLATE

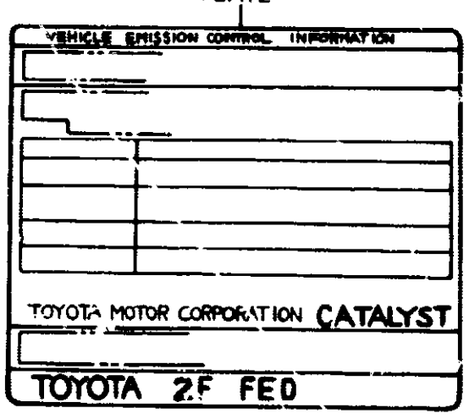

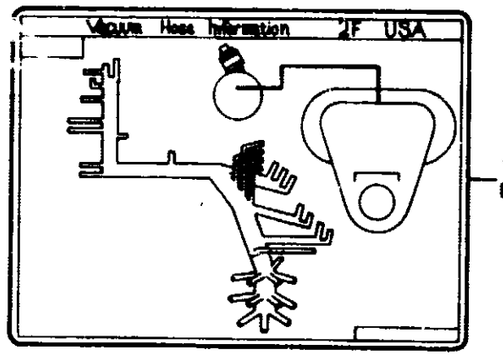

17792
PLATE

MA 4851-B

GENUINE TOYOTA PARTS

PROD.DATE	MODELS	DESCRIPTION	R/P	PART NUMBER	QTY	REV.REF.CODE FROM	REV.REF.CODE UP TO
FIG.	17-09 CAUTION PLATE & NAME PLATE						
	11293 PLATE, ENGINE CAUTION & ENGINE NAME						
8510-	2H..HJ60			11293-68011-	1	567	
8008-8510	3B..BJ60			11293-58010-	1	455	565
	11294 PLATE, ENGINE CAUTION, NO.2						
8008-8210	2F..FJ60..USA			11294-34020-	1	455	
	11298 PLATE, EMISSION CONTROL INFORMATION						
8110-8210	2F..FJ60	CALIFORNIA SPEC		11298-61022-	1	459	466
8110-8210	2F..FJ60			11298-61032-	1	459	466
8210-8308	2F..FJ60	CALIFORNIA SPEC		11298-61023-	1	467	
8210-8309	2F..FJ60			11298-61033-	1	467	
8402-8502	2F..FJ60	CALIFORNIA SPEC		11298-61024-	1	507	562
8309-8504	2F..FJ60			11298-61034-	1		554
8502-8604	2F..FJ60	CALIFORNIA SPEC		11298-61025-	1	563	572
8504-8604	2F..FJ60			11298-61035-	1	555	572
8604-	2F..FJ60	CALIFORNIA SPEC		11298-61026-	1	573	
8604-	2F..FJ60			11298-61036-	1	573	
8008-8110	2F..FJ60..USA	CALIFORNIA SPEC		11298-61021-	1	455	458
8008-8110	2F..FJ60..USA			11298-61031-	1	455	458
	17700C PLATE, AIR CLEANER CAUTION (FOR ENGINE MODEL)						
8008-8504	2F..FJ60			17791-61022-	1	455	554
8504-	2F..FJ60			17791-61023-	1	555	
8008-	3B,2H..BJ60,HJ60			17791-56170-	1	455	
	17700D PLATE, ENGINE CAUTION						
8008-8110	2F..FJ60..CND			11293-61011-	1	455	458
	17792 PLATE, ENGINE VACUUM HOSE INFORMATION						
8008-	2F..FJ60..USA			17792-61033-	1	455	

FIG.19-01 IGNITION COIL & SPARK PLUG

MR4-11-0394

(8008-)2F

(8008-8510)3B

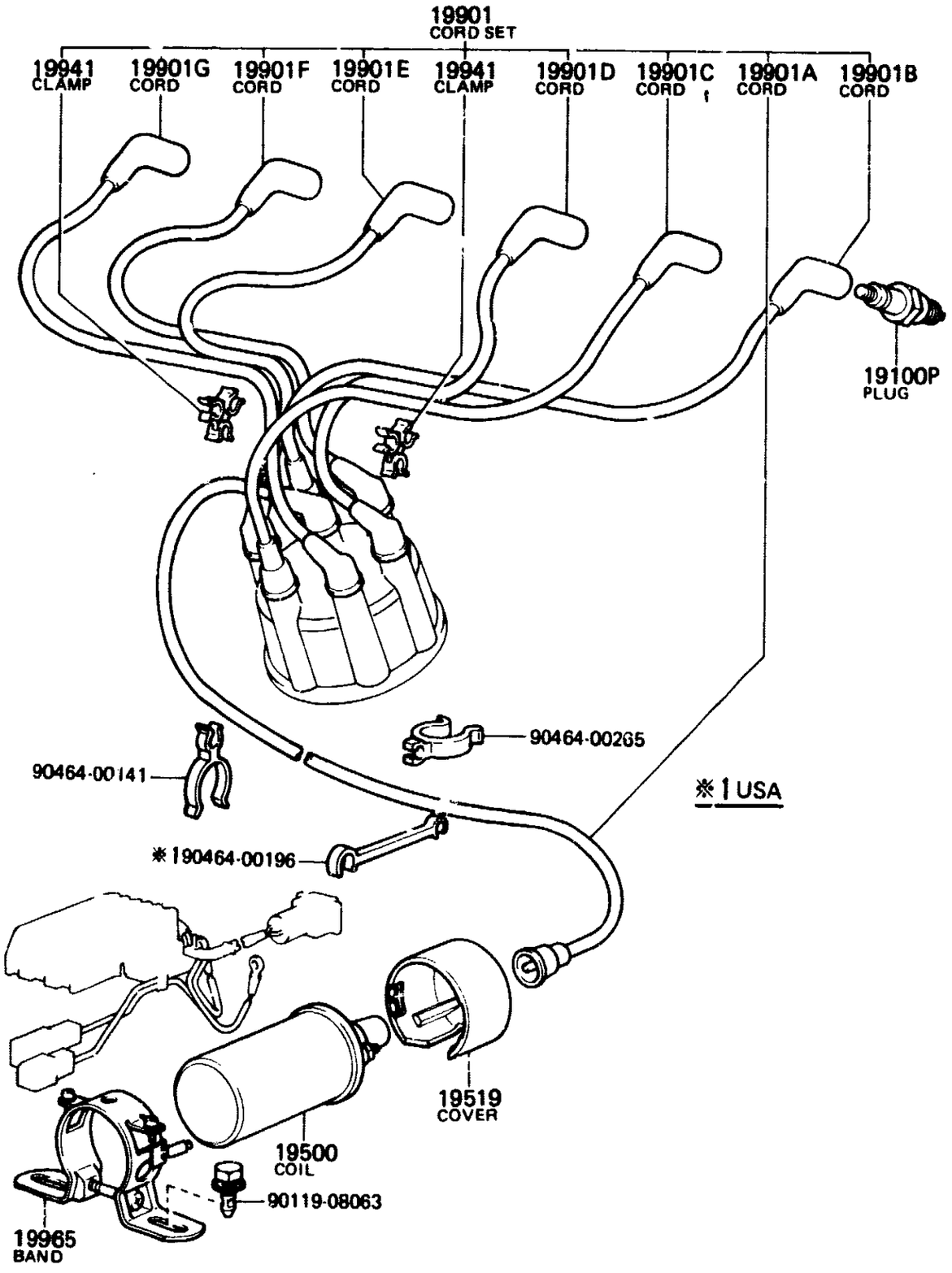

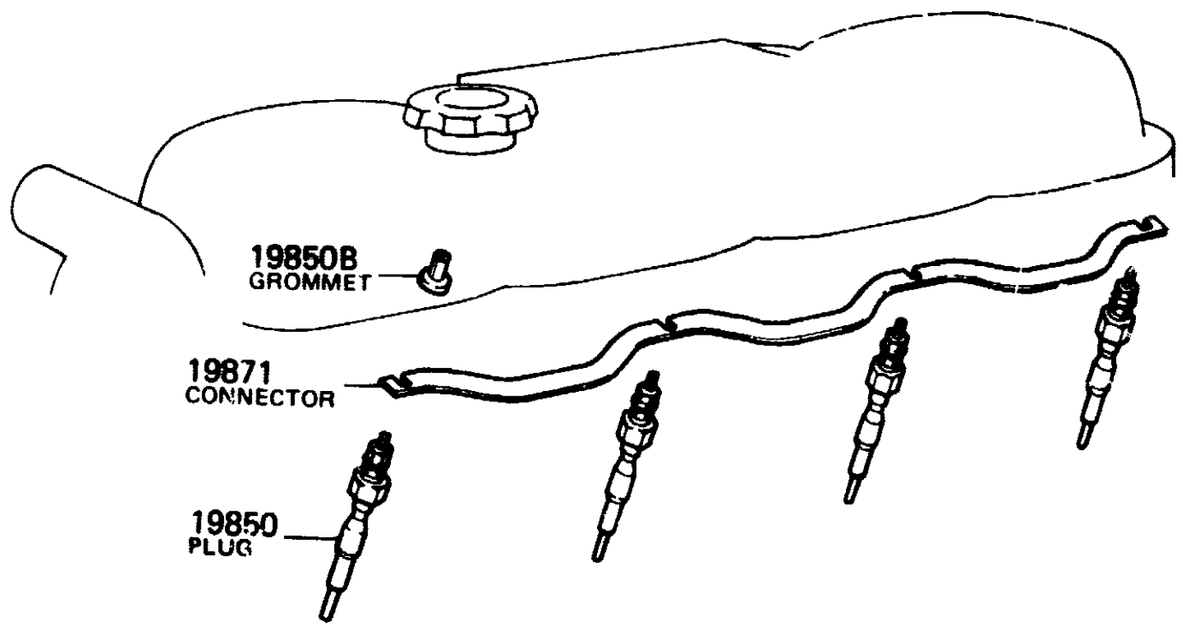

ME 3358

ME 9091-A

FIG.19-01 IGNITION COIL & SPARK PLUG

(8510-)2H

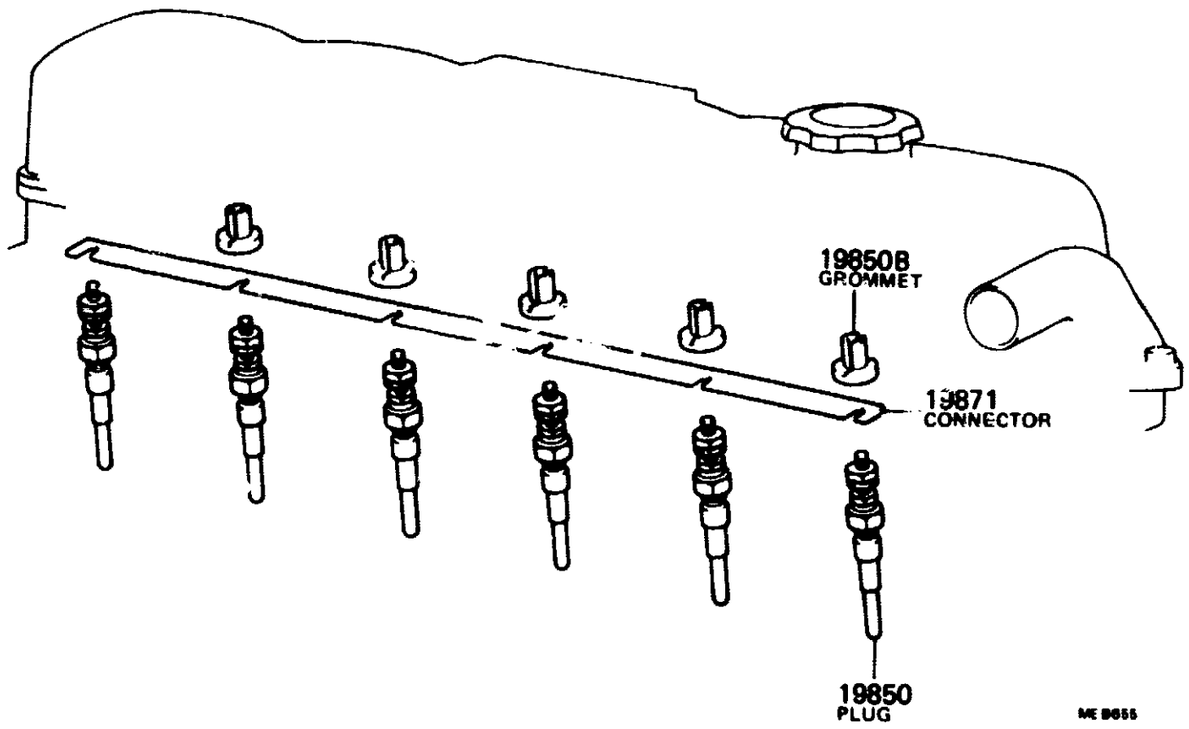

GENUINE TOYOTA PARTS

PROD.DATE	MODELS	DESCRIPTION	R/O	PART NUMBER	QTY	REV.REF.CODE FROM	REV.REF.CODE UP TO
FIG.	19-01 IGNITION COIL & SPARK PLUG						
	19100P PLUG, SPARK						
8008-	2F..FJ60	W14EXR-U		90919-01065-	6	455	
	19500 COIL ASSY, IGNITION						
8008-8110	2F..FJ60..CND			90919-02083-	1	455	458
8008-	2F..FJ60..USA			90919-02113-	1	455	
	19519 COVER, IGNITION COIL						
8008-8110	2F..FJ60..CND			19519-38030-	1	455	458
8008-8110	2F..FJ60..USA	COLD SPEC			1	455	458
8110-	2F..FJ60..USA				1	459	
	19850 PLUG ASSY, GLOW						
8510-	2H..HJ60	24V-14V		19850-68060-	6	567	
8008-8110	3B..BJ60	*12V-10.5V		19850-68010-	4	455	458
8110-8510	3B..BJ60	*12V-6V		19850-68050-	4	459	566
	19850B GROMMET, SCREW (FOR GLOW PLUG)						
8008-	3B,2H..BJ60,HJ60			90189-04024-	5	455	
	19871 CONNECTOR, GLOW PLUG NO.1						
8510-	2H..HJ60			19871-68011-	6	567	
8008-8510	3B..BJ60			19871-56020-	1	455	566
	19901 CORD SET, COIL AND SPARK, W/RESISTIVE						
8008-8510	2F..FJ60			90919-21325-	1	455	566
	19901A CORD, COIL RESISTIVE						
8008-	2F..FJ60			90919-13164-	1	455	
	19901B CORD, SPARK PLUG RESISTIVE, NO.1						
8008-	2F..FJ60			90919-12349-	1	455	
	19901C CORD, SPARK PLUG RESISTIVE, NO.2						
8008-	2F..FJ60			90919-12348-	1	455	

*OOV-OOV = Battery Voltage-Glow Plug Rated Voltage

FIG.19-01 **GENUINE TOYOTA PARTS** 1-E7 **GENUINE TOYOTA PARTS**

PROD.DATE	MODELS	DESCRIPTION	R/P	PART NUMBER	QTY	REV.REF.CODE FROM	REV.REF.CODE UP TO
	19901D	CORD, SPARK PLUG RESISTIVE, NO.3					
8008-	2F..FJ60			90919-12347-	1	455	
	19901E	CORD, SPARK PLUG RESISTIVE, NO.4					
8008-	2F..FJ60			90919-12372-	1	455	
	19901F	CORD, SPARK PLUG RESISTIVE, NO.5					
8008-	2F..FJ60			90919-12345-	1	455	
	19901G	CORD, SPARK PLUG RESISTIVE, NO.6					
8008-	2F..FJ60			90919-12346-	1	455	
	19941	CLAMP, RESISTIVE CORD, NO.1					
8008-	2F..FJ60			90464-00253-	3	455	
	19965	BAND, IGNITION COIL, NO.1					
8008-	2F..FJ60			90919-03065-	1	455	

PROD.DATE	MODELS	DESCRIPTION	R/P	PART NUMBER	QTY	REV.REF.CODE FROM	REV.REF.CODE UP TO

FIG.19-02 DISTRIBUTOR

HR4-11-0395

(8008-)2F..USA

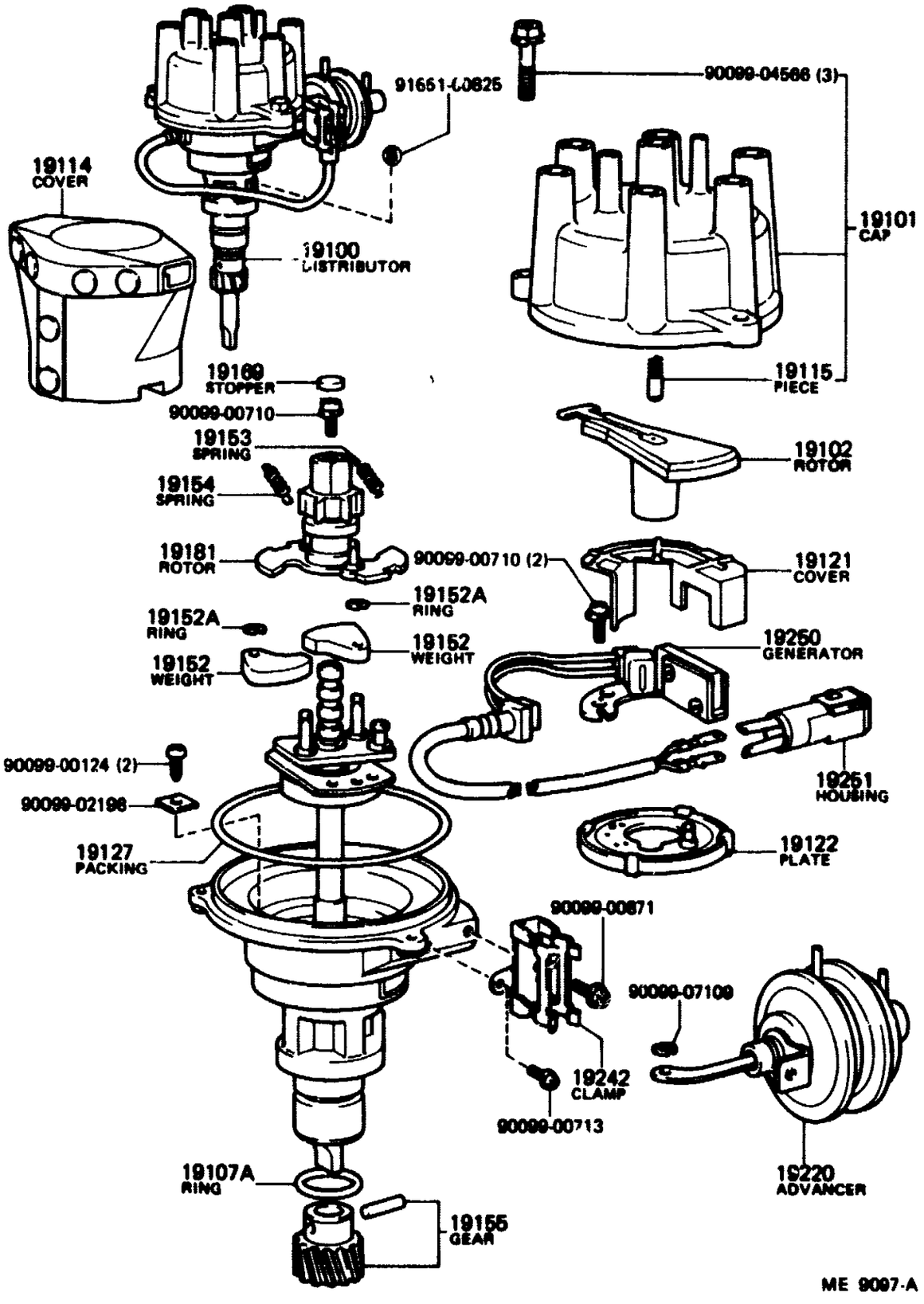

ME 9097-A

(8008-8110)2F..CND

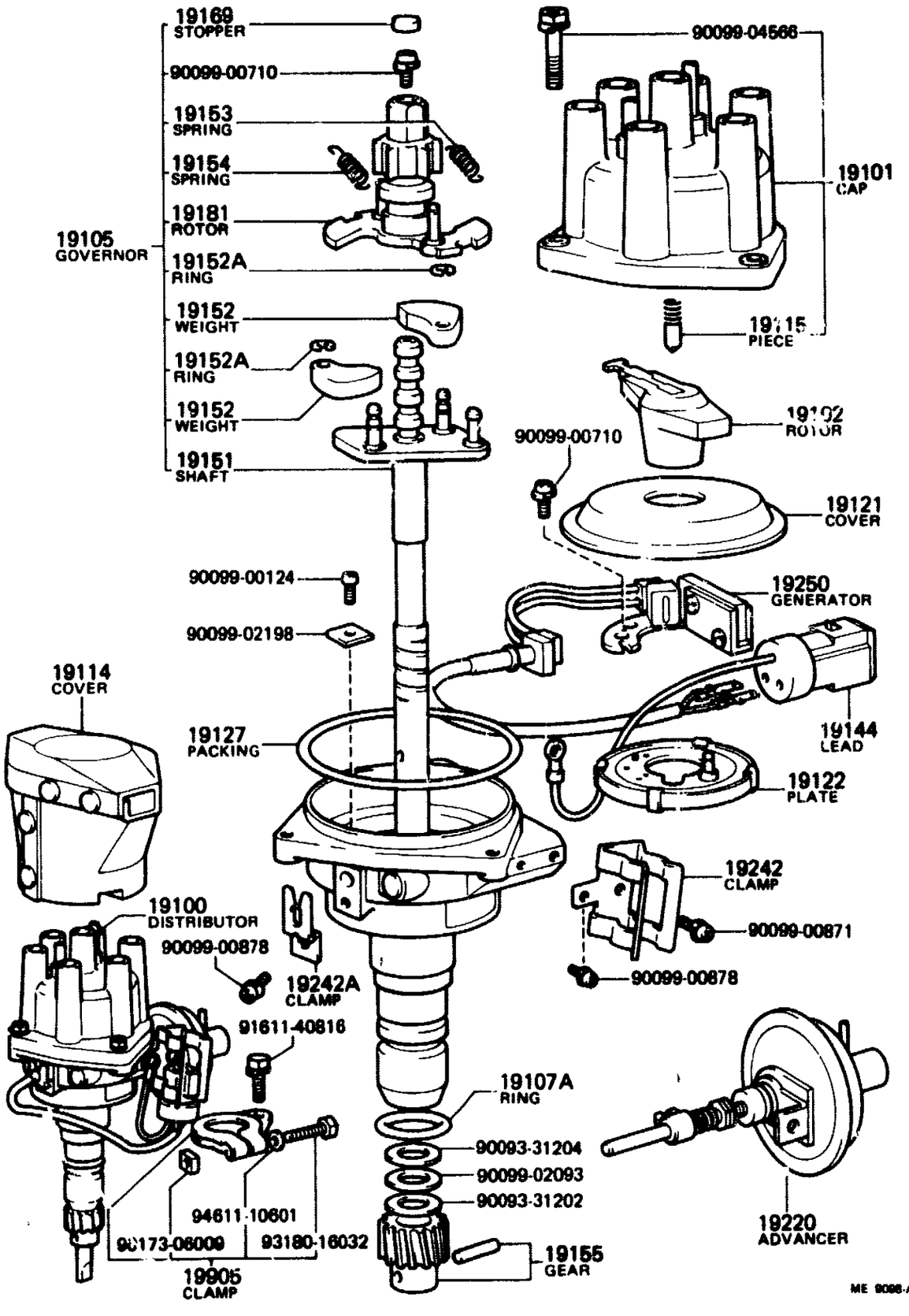

ME 9098-A

	PROD.DATE	MODELS	DESCRIPTION	R/P	PART NUMBER	QTY	REV.REF.CODE FROM	REV.REF.CODE UP TO
	FIG.	19-02 DISTRIBUTOR						
		19100 DISTRIBUTOR ASSY						
	8008-8110	2F..FJ60..CND			19100-61092-	1	455	458
	8008-	2F..FJ60..USA			19100-61102-	1	455	
		19101 CAP SUB-ASSY, DISTRIBUTOR						
	8008-8110	2F..FJ60..CND			19101-61101-	1	455	458
	8008-	2F..FJ60..USA			19101-61102-	1	455	
		19102 ROTOR SUB-ASSY, DISTRIBUTOR						
	8008-8109	2F..FJ60..CND			19102-61091-	1	455	
	8109-8110	2F..FJ60..CND			19102-45150-	1		458
	8008-8010	2F..FJ60..USA		#	19102-61102- (19102-43060-)	1	455	
	8010-	2F..FJ60..USA			19102-43060-	1		
		19105 GOVERNOR SUB-ASSY						
	8008-8110	2F..FJ60..CND			19105-61091-	1	455	458
		19107A RING, DISTRIBUTOR HOUSING O						
	8008-	2F..FJ60			90099-14020-	1	455	
		19114 COVER, WATER PROOF (FOR DISTRIBUTOR)						
	8008-8110	2F..FJ60..CND			19114-61011-	1	455	458
C	8008-8110	2F..FJ60..USA	COLD SPEC		19114-61030-	1	455	458
C	8110-	2F..FJ60..USA				1	459	
		19115 PIECE, DISTRIBUTOR CAP CENTER						
	8008-	2F..FJ60			19115-50010-	1	455	
		19121 COVER, DUST PROOF						
	8008-8110	2F..FJ60..CND			19121-41140-	1	455	458
	8008-	2F..FJ60..USA			19121-27020-	1	455	
		19122 PLATE, STATIONARY, DISTRIBUTOR						
	8008-8110	2F..FJ60..CND			19122-45070-	1	455	458
	8008-	2F..FJ60..USA			19122-88262-	1	455	

PROD.DATE	MODELS	DESCRIPTION	R/P	PART NUMBER	QTY	REV.REF.CODE FROM	REV.REF.CODE UP TO
	19127 PACKING, DUST PROOF						
8008-8110	2F..FJ60..CND			19127-41141-	1	455	458
8008-	2F..FJ60..USA			19127-52020-	1	455	
	19144 LEAD, DISTRIBUTOR BREAKER						
8008-8110	2F..FJ60..CND			19144-61091-	1	455	458
	19151 SHAFT, GOVERNOR						
8008-8110	2F..FJ60..CND			19151-61100-	1	455	458
	19152 WEIGHT, GOVERNOR						
8008-	2F..FJ60			19152-45060-	2	455	
	19152A RING, SNAP (FOR GOVERNOR WEIGHT)						
8008-8110	2F..FJ60..CND			90099-07104-	2	455	458
8008-	2F..FJ60..USA			90099-07109-	2	455	
	19153 SPRING, GOVERNOR, A						
8008-8110	2F..FJ60..CND			19153-61091-	1	455	458
8008-	2F..FJ60..USA			19153-61102-	1	455	
	19154 SPRING, GOVERNOR, B						
8008-8110	2F..FJ60..CND			19154-61091-	1	455	458
8008-	2F..FJ60..USA			19154-61102-	1	455	
	19155 GEAR, SPIRAL, DISTRIBUTOR						
8008-	2F..FJ60			19195-61100-	1	455	
	19169 STOPPER, CAM GREASE						
8008-	2F..FJ60		#	19169-32010- (19169-63011-)	1	455	
	19181 ROTOR, DISTRIBUTOR, SIGNAL						
8008-8110	2F..FJ60..CND			19181-61091-	1	455	458
8008-	2F..FJ60..USA			19181-70010-	1	455	
	19220 ADVANCER ASSY, VACUUM, DISTRIBUTOR						
8008-8110	2F..FJ60..CND			19220-61091-	1	455	458

PROD.DATE	MODELS	DESCRIPTION	R/P	PART NUMBER	QTY	REV.REF.CODE FROM	REV.REF.CODE UP TO
	19220 ADVANCER ASSY, VACUUM, DISTRIBUTOR CONTINUED						
8008-	2F..FJ60..USA			19220-61102-	1	455	
	19242 CLAMP, CORD						
8008-8110	2F..FJ60..CND			19247-61100-	1	455	458
8008-	2F..FJ60..USA			19242-61102-	1	455	
	19242A CLAMP, CORD, NO.2						
8008-8110	2F..FJ60..CND			19242-61091-	1	455	458
	19250 GENERATOR ASSY, SIGNAL						
8008-8110	2F..FJ60..CND			19250-61100-	1	455	458
8008-	2F..FJ60..USA			19250-61102-	1	455	
	19251 HOUSING, POLE CONNECTOR						
8008-	2F..FJ60..USA			90099-37005-	1	455	
	19905 CLAMP SUB-ASSY, DISTRIBUTOR						
8008-8110	2F..FJ60..CND			19905-40010-	1	455	458

PROD.DATE	MODELS	DESCRIPTION	R/P	PART NUMBER	QTY	REV.REF.CODE FROM	REV.REF.CODE UP TO

FIG.19-03 ALTERNATOR

MR4-11-0396

(8008-8604)2F

12V 40 & 45A

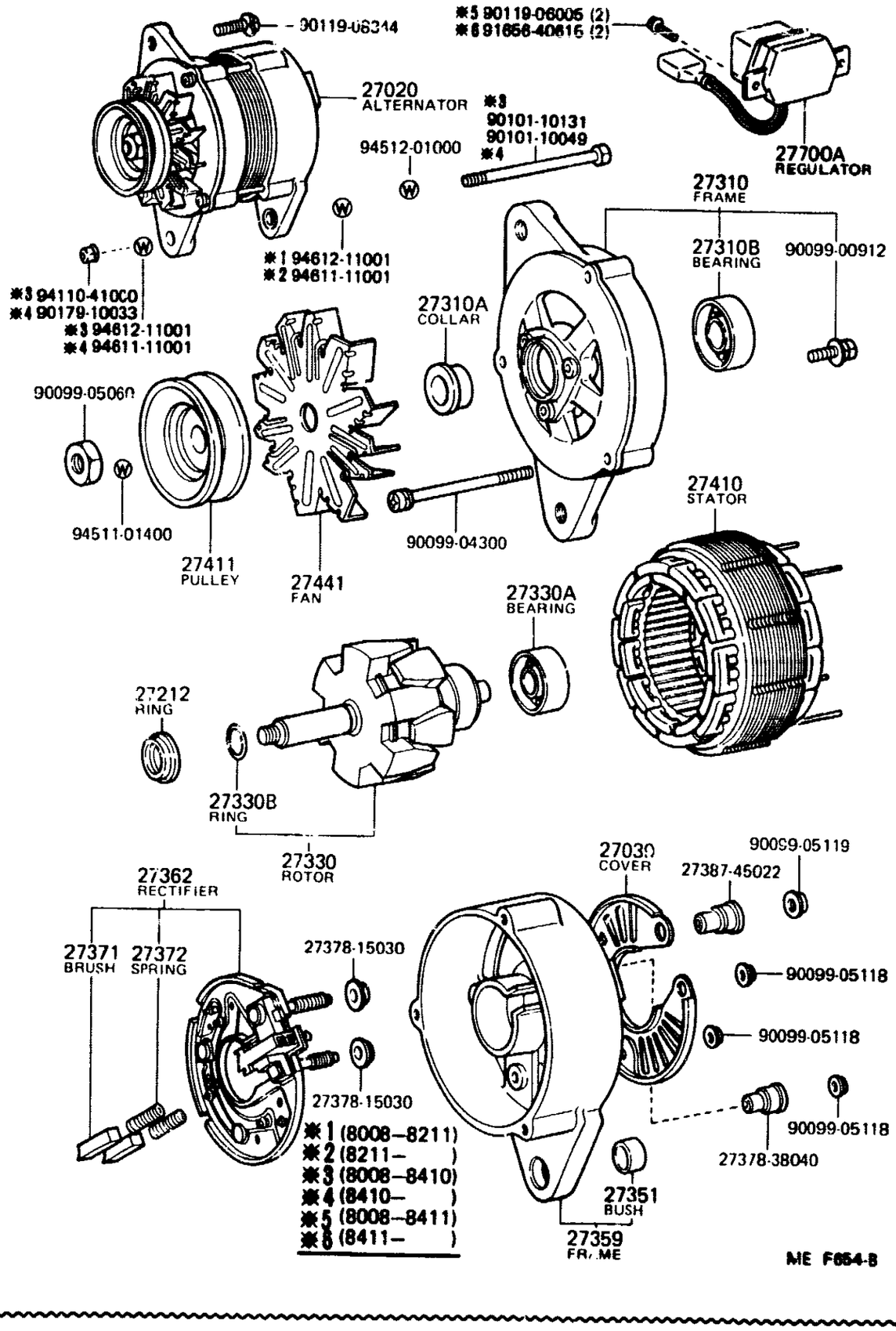

ME F654-B

(8008-)2F

12V 55A

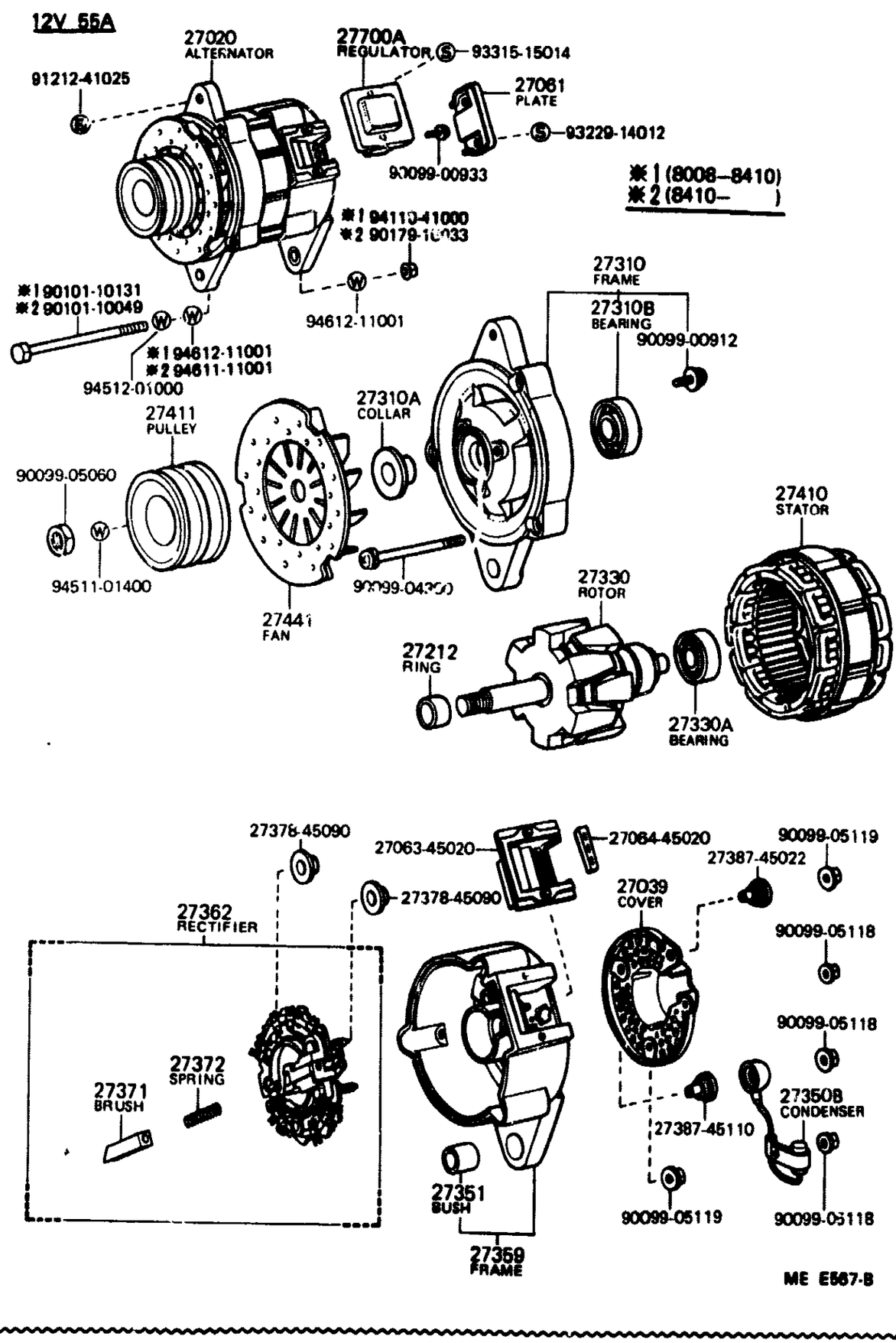

ME E567-B

MEF654B

MEE567B

(8008-8204)3B

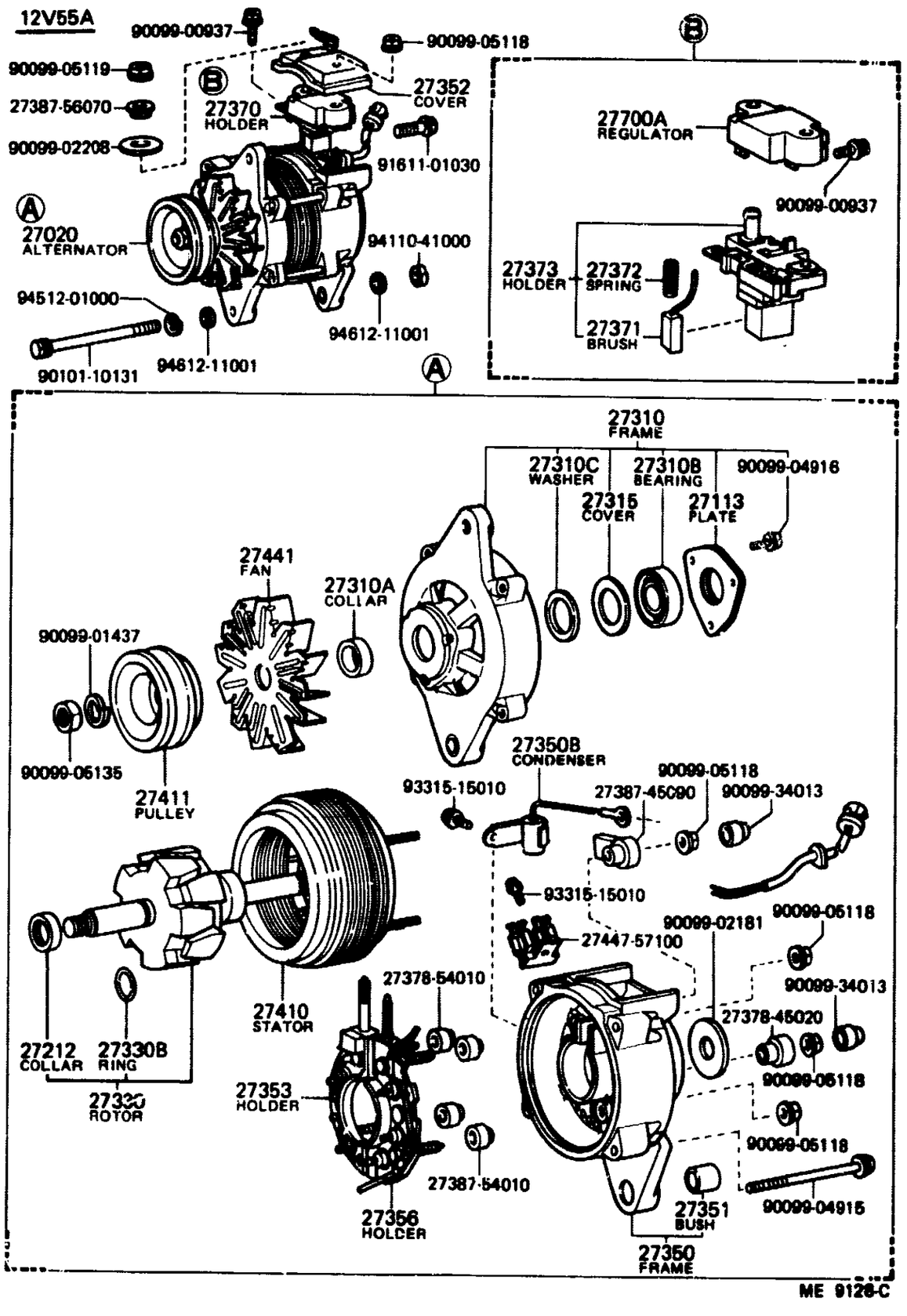

(8204-8510)3B

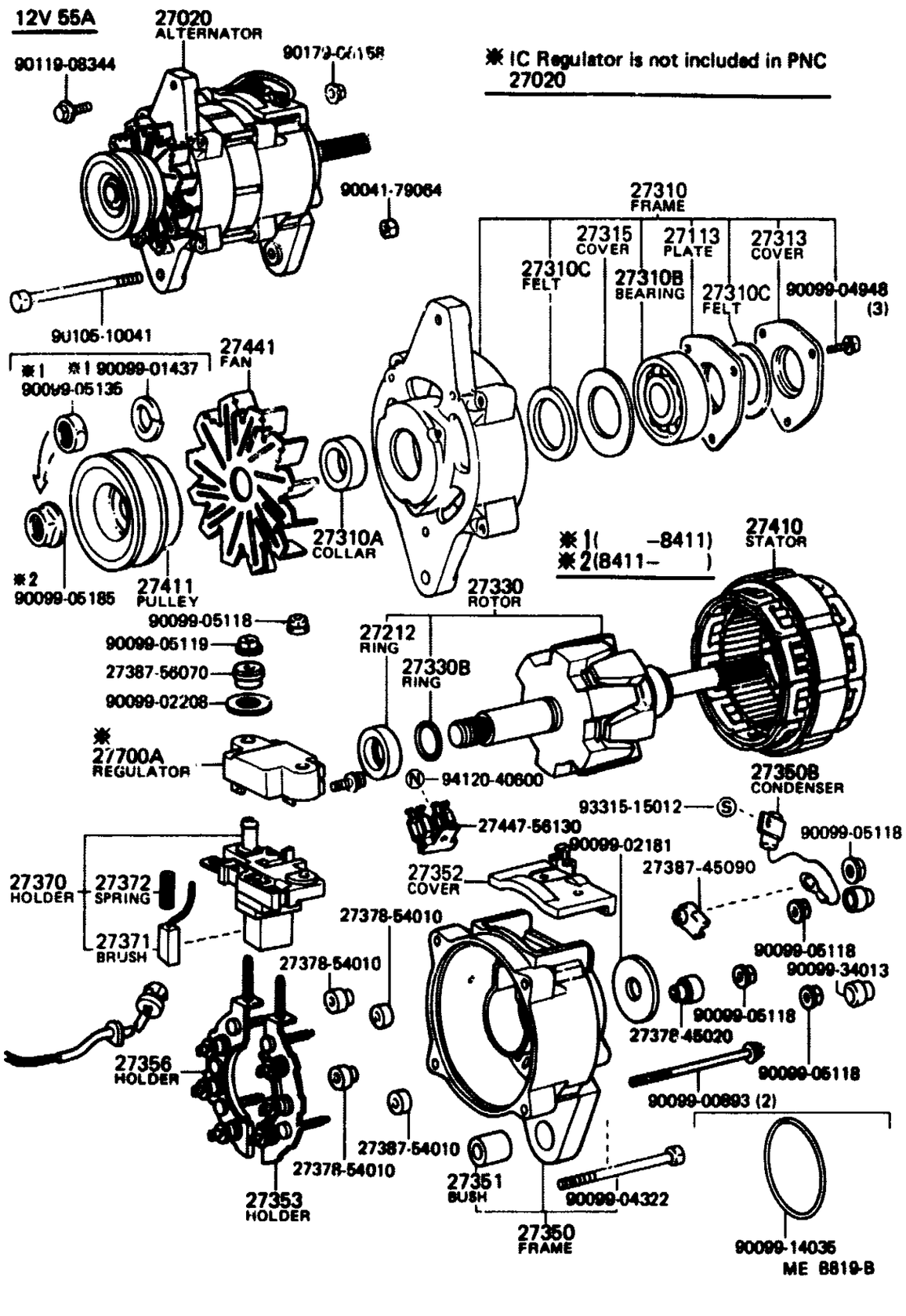

(8510-)2H

24V 40A

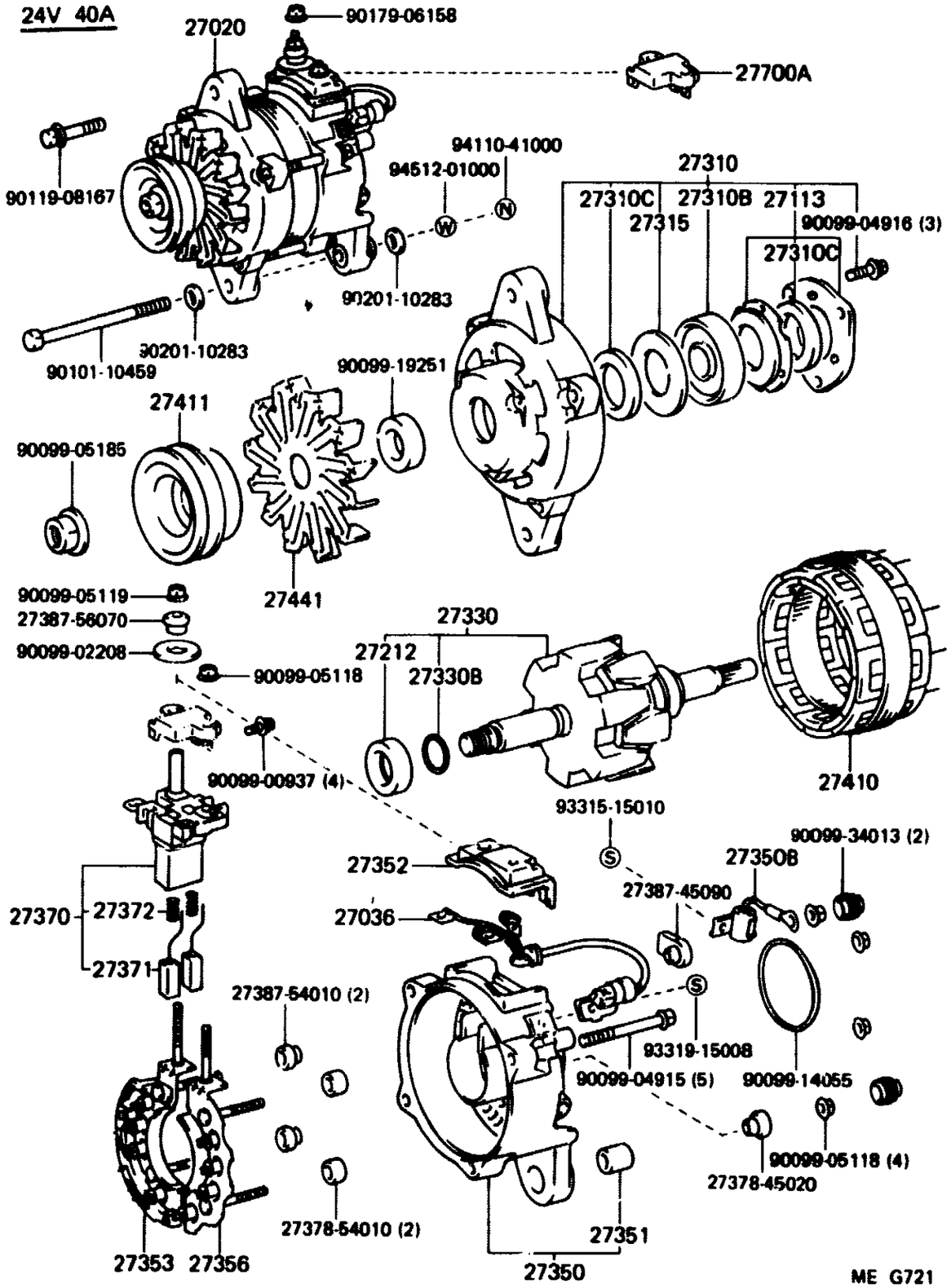

GENUINE TOYOTA PARTS

	PROD.DATE	MODELS	DESCRIPTION	R/P	PART NUMBER	QT	REV.REF.CODE FROM	REV.REF.CODE UP TO
	FIG.	19-03 ALTERNATOR						
		27020 ALTERNATOR ASSY						
	8008-8110	2F..FJ60..CND	12V 55A		27020-61081-	1	455	458
	8008-8604	2F..FJ60..USA	12V 40A		27020-61100-	1	455	572
	8008-8604	2F..FJ60..USA	12V 45A		27020-61130-	1	455	572
	8008-	2F..FJ60..USA	12V 55A		27020-61071-	1	455	
	8510-	2H..HJ60	24V 40A		27020-68150-	1	567	
	8008-8204	3B..BJ60	12V 55A		27020-57071-	1	455	
	8204-8210	3B..BJ60	12V 55A		27020-56190-	1		466
	8210-8510	3B..BJ60	12V 55A		27020-56240-	1	467	566
		27036 TERMINAL SUB-ASSY, LEAD WIRE, ALTERNATOR						
	8510-	2H..HJ60	24V 40A		27036-68150-	1	567	
		27039 COVER, REAR END						
	8504-8604	2F..FJ60	12V 40A,45A		27039-18011-	1	555	572
	8008-	2F..FJ60	12V 55A		27039-15010-	1	455	
		27061 PLATE, REGULATOR COVER						
	8008-	2F..FJ60	12V 55A		27062-45050-	1	455	
		27113 PLATE, BEARING RETAINER, ALTERNATOR						
	8510-	2H..HJ60	24V 40A		27312-56070-	1	567	
	8008-8204	3B..BJ60	12V 55A			1	455	
	8204-8510	3B..BJ60	12V 55A		27312-57060-	1		566
		27212 RING, SPACE (FOR ALTERNATOR ROTOR)						
C	8008-8604	2F..FJ60	12V 55A		27412-45070-	1	455	
C	8604-	2F..FJ60	12V 55A		27412-15150-	1		
	8008-8604	2F..FJ60..USA	12V 40A,45A		27212-39050-	1	455	572
	8510-	2H..HJ60	24V 40A		27412-54040-	1	567	
	8008-8204	3B..BJ60	12V 55A			1	455	
	8204-8510	3B..BJ60	12V 55A		27333-57060-	1		566

PROD.DATE	MODELS	DESCRIPTION	R/P	PART NUMBER	QTY	REV.REF.CODE FROM	REV.REF.CODE UP TO
	27310 FRAME ASSY, DRIVE END, ALTERNATOR						
8008-8110	2F..FJ60..CND	12V 55A		27310-38061-	1	455	458
8008-8207	2F..FJ60..USA	12V 55A		27310-61070-	1	455	
8008-8604	2F..FJ60..USA	12V 40A,45A		27310-15030-	1	455	572
8207-	2F..FJ60..USA	12V 55A		27310-45110-	1		
8510-	2H..HJ60	24V 40A		27310-68140-	1	567	
8008-8204	3B..BJ60	12V 55A		27310-57061-	1	455	
8204-8210	3B..BJ60	12V 55A		27310-56110-	1		466
8210-8510	3B..BJ60	12V 55A		27310-56180-	1	467	566
	27310A COLLAR OR NUT (FOR ALTERNATOR DRIVE END FRAME)						
8008-	2F..FJ60	12V 40A,45A,55A		27412-31040-	1	455	
8008-8204	3B..BJ60	12V 55A		90099-19251-	1	455	
8204-8510	3B..BJ60	12V 55A		27412-57060-	1		566
	27310B BEARING (FOR ALTERNATOR DRIVE END FRAME)						
8008-	2F..FJ60	12V 55A		90099-10125-	1	455	
8008-8604	2F..FJ60..USA	12V 40A,45A		90099-10126- (90099-10125-)	1	455	572
8510-	2H..HJ60	24V 40A		90099-10120-	1	567	
8008-8204	3B..BJ60	12V 55A			1	455	
8204-8510	3B..BJ60	12V 55A		90099-10137-	1		566
	27310C FELT (FOR ALTERNATOR DRIVE END FRAME)						
8510-	2H..HJ60	24V 40A		90099-02207-	2	567	
8008-8204	3B..BJ60	12V 55A			1	455	
8204-8510	3B..BJ60	12V 55A		90099-02209-	2		566
	27313 COVER, ALTERNATOR FELT, INNER NO.2						
8204-8510	3B..BJ60	12V 55A		27313-57060-	1		566
	27315 COVER, ALTERNATOR FELT, INNER NO.1						
8510-	2H..HJ60	24V 40A		27315-56070-	1	567	
8008-8204	3B..BJ60	12V 55A			1	455	

PROD.DATE	MODELS	DESCRIPTION	R/P	PART NUMBER	QTY	REV.REF.CODE FROM	REV.REF.CODE UP TO
	27315 COVER, ALTERNATOR FELT, INNER NO.1 CONTINUED						
8204-8510	3B..BJ60	12V 55A		27315-57060-	1		566
	27330 ROTOR ASSY, ALTERNATOR						
8008-	2F..FJ60	12V 55A		27330-45090-	1	455	
8008-8604	2F..FJ60..USA	12V 40A		27330-26050-	1	455	572
8008-8604	2F..FJ60..USA	12V 45A		27330-45020-	1	455	572
8510-	2H..HJ60	24V 40A		27330-68150-	1	567	
8008-8204	3B..BJ60	12V 55A		27330-54060-	1	455	
8204-8409	3B..BJ60	12V 55A		27330-56190-	1		
8409-	3B..BJ60	12V 55A		27330-64030-	1		
	27330A BEARING (FOR ALTERNATOR ROTOR)						
8008-	2F..FJ60	12V 55A		90099-10116-	1	455	
8008-8604	2F..FJ60..USA	12V 40A,45A		90099-10111- (90099-10116-)	1	455	572
	27330B RING, SNAP (FOR ALTERNATOR ROTOR)						
8008-8604	2F..FJ60..USA	12V 40A,45A		90099-07048-	1	455	572
3510-	2H..HJ60	24V 40A		90099-07108-	1	567	
8008-8204	3B..BJ60	12V 55A			1	455	
8204-8510	3B..BJ60	12V 55A		90099-07103-	1		566
	27350 FRAME ASSY, RECTIFIER END						
8510-	2H..HJ60	24V 40A		27350-68140-	1	567	
8008-8204	3B..BJ60	12V 55A		27350-57061-	1	455	
8204-8510	3B..BJ60	12V 55A		27350-56110-	1		566
	27350B CONDENSER, ALTERNATOR						
8008-	2F..FJ60	12V 55A		90099-52065-	1	455	
8510-	2H..HJ60	24V 40A		90099-52082-	1	567	
8008-8510	3B..BJ60	12V 55A		90099-52066-	1	455	566
	27351 BUSH (FOR ALTERNATOR RECTIFIER END FRAME)						
8008-	2F..FJ60	12V 40A,45A,55A		27351-38051-	1	455	

PROD.DATE	MODELS	DESCRIPTION	R/P	PART NUMBER	QTY	REV.REF.CODE FROM	REV.REF.CODE UP TO
	27351 BUSH (FOR ALTERNATOR RECTIFIER END FRAME) CONTINUED						
8008-	3B,2H..BJ60,HJ60	12V 55A,24V 40A		27351-56013-	1	455	
	27352 COVER, FRAME BRUSH						
8510-	2H..HJ60	24V 40A		27388-68140-	1	567	
8008-8510	3B..BJ60	12V 55A		27388-57070-	1	455	566
	27353 HOLDER, W/RECTIFIER POSITIVE, ALTERNATOR						
8510-	2H..HJ60	24V 40A		27353-68150-	1	567	
8008-8510	3B..BJ60	12V 55A		27353-57070-	1	455	566
	27356 HOLDER, W/RECTIFIER NEGATIVE, ALTERNATOR						
8510-	2H..HJ60	24V 40A		27356-68150-	1	567	
8008-8210	3B..BJ60	12V 55A		27356-57070-	1	455	466
8210-8510	3B..BJ60	12V 55A		27356-54170-	1	467	566
	27359 FRAME, RECTIFIER END						
8008-8110	2F..FJ60..CND	12V 55A		27359-45122-	1	455	458
8008-8604	2F..FJ60..USA	12V 40A,45A		27359-35040-	1	455	572
8008-	2F..FJ60..USA	12V 55A		27359-45140-	1	455	
	27362 RECTIFIER ASSY, W/BRUSH						
8008-8011	2F..FJ60	12V 55A	#	27362-70010- (27362-70011-)	1	455	
8011-	2F..FJ60	12V 55A		27362-70011-	1		
8008-8604	2F..FJ60..USA	12V 40A,45A		27362-61100-	1	455	572
	27370 HOLDER ASSY, ALTERNATOR BRUSH						
8510-	2H..HJ60	24V 40A		27373-57120-	1	567	
8008-8204	3B..BJ60	12V 55A		27370-57070-	1	455	
8204-8510	3B..BJ60	12V 55A		27373-57070-	1		566
	27371 BRUSH, ALTERNATOR						
8008-	2F..FJ60	12V 55A		27371-31011-	2	455	

PROD.DATE	MODELS	DESCRIPTION	R/P	PART NUMBER	QTY	REV.REF.CODE FROM	REV.REF.CODE UP TO
	27371 BRUSH, ALTERNATOR CONTINUED						
8008-8604	2F..FJ60..USA	12V 40A,45A		27371-31011-	2	455	572
8008-	3B,2H..BJ60,HJ60	12V 55A,24V 40A		27371-56070-	2	455	
	27372 SPRING, ALTERNATOR BRUSH						
8008-	2F..FJ60	12V 55A		27372-31011-	2	455	
8008-8604	2F..FJ60..USA	12V 40A,45A			2	455	572
8008-	3B,2H..BJ60,HJ60	12V 55A,24V 40A		27372-56070-	2	455	
	27373 HOLDER, ALTERNATOR BRUSH, A						
8008-8204	3B..BJ60	12V 55A		27373-57070-	1	455	
	27410 STATOR ASSY, ALTERNATOR						
8008-	2F..FJ60	12V 55A		27410-41080-	1	455	
8008-8604	2F..FJ60..USA	12V 40A	#	27410-15030- (27410-38120-)	1	455	572
8008-8604	2F..FJ60..USA	12V 45A		27410-38120-	1	455	572
8510-	2H..HJ60	24V 40A		27410-68150-	1	567	
8008-8510	3B..BJ60	12V 55A		27410-57070-	1	455	566
	27411 PULLEY, ALTERNATOR						
8008-	2F..FJ60	12V 55A		27411-60032-	1	455	
8008-8604	2F..FJ60..USA	12V 40A,45A			1	455	572
8510-	2H..HJ60	24V 40A		27411-68140-	1	567	
8008-8204	3B..BJ60	12V 55A		27411-57061-	1	455	
8204-8510	3B..BJ60	12V 55A		27411-57060-	1		566
	27441 FAN, ALTERNATOR						
8008-	2F..FJ60	12V 55A		27441-45110-	1	455	
8008-8604	2F..FJ60..USA	12V 40A,45A		27441-34030-	1	455	572
8510-	2H..HJ60	24V 40A		27441-54070-	1	567	
8008-8204	3B..BJ60	12V 55A		27441-54040-	1	455	

PROD.DATE	MODELS	DESCRIPTION	R/P	PART NUMBER	QTY	REV.REF.CODE FROM	REV.REF.CODE UP TO
	27441 FAN, ALTERNATOR						
	CONTINUED						
8204-8510	3B..BJ60	12V 55A		27441-56090-	1		566
	27700A REGULATOR	ASSY, GENERATOR					
8008-	2F..FJ60	IC TYPE		27700-38100-	1	455	
8008-8604	2F..FJ60..USA	S.D TYPE		27700-13060-	1	455	572
8510-	2H..HJ60			27700-57050-	1	567	
8008-8510	3B..BJ60			27700-57060-	1	455	566

PROD.DATE	MODELS	DESCRIPTION	R/P	PART NUMBER	QTY	REV.REF.CODE FROM	REV.REF.CODE UP TO

FIG.19-04 STARTER

1-B8

MR:-11-0398

(8008-8206)2F

(8206-)2F

12 V 1.0 KW

28100 STARTER
90116-12005
94512-01200
94115-41200
28114 PIN
94511-00600
90099-05122
90099-0(
94511-00600
28150 SWITCH
28113 LEVER
91212-41230
94512-01200
90099-05129
94120-40800
94511-00800
94511-00800
28011 CLUTCH
28132 COVER
28111 BUSH
28110 HOUSING
28163 NUT
28163A RING
28117 RUBBER
28172 HOLDER
28162 SPRING
28125 BUSH
28180 ARMATURE
28012 BEARING
28140 HOLDER
28142 BRUSH
28143 SPRING
28142 BRUSH
28121 COIL
28123 CORE
90099-00102
28120 YOKE

94511-00800
90099-04891
90099-01098
90099-00902
28136 PLATE
90093-31202
28138 RUBBER
28131 BUSH
✱28119 COVER
28133 COVER
28130 FRAME
✱(8101-)

ME 9103-8

ME9103B

12 V 1.0 KW

28100 STARTER
90116-12005
94512-01200
94115-41200
90179-08146
94512-01200
91212-41230
28140 HOLDER
28120 YOKE
28143 SPRING
28130 FRAME
90099-04562
90099-00902
28137 WASHER
28150 SW., MAGNET
28160A BEARING (FR)
28160A BEARING (RR)
28160 ARMATURE
94511-00800
90099-05129
94110-40800
28228 ROLLER
26229 RETAINER
90099-00907
28252 GEAR
28165 SPRING
90099-12009
28011 CLUTCH
28110 HOUSING

ME C420 8

MEC420B

(8008-8510)3B

(8510-)2H

12 V 2.5 KW

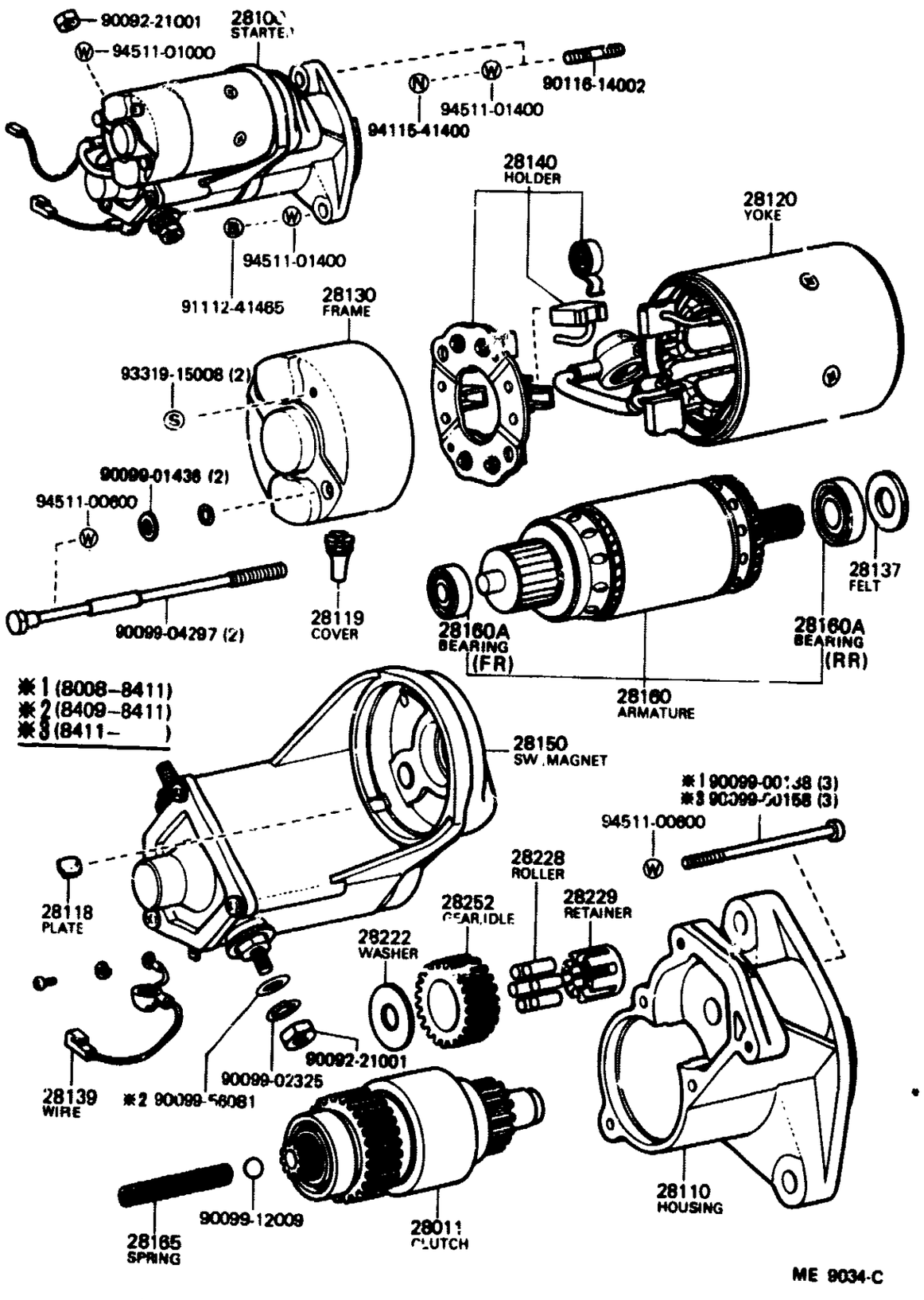

ME 9034-C

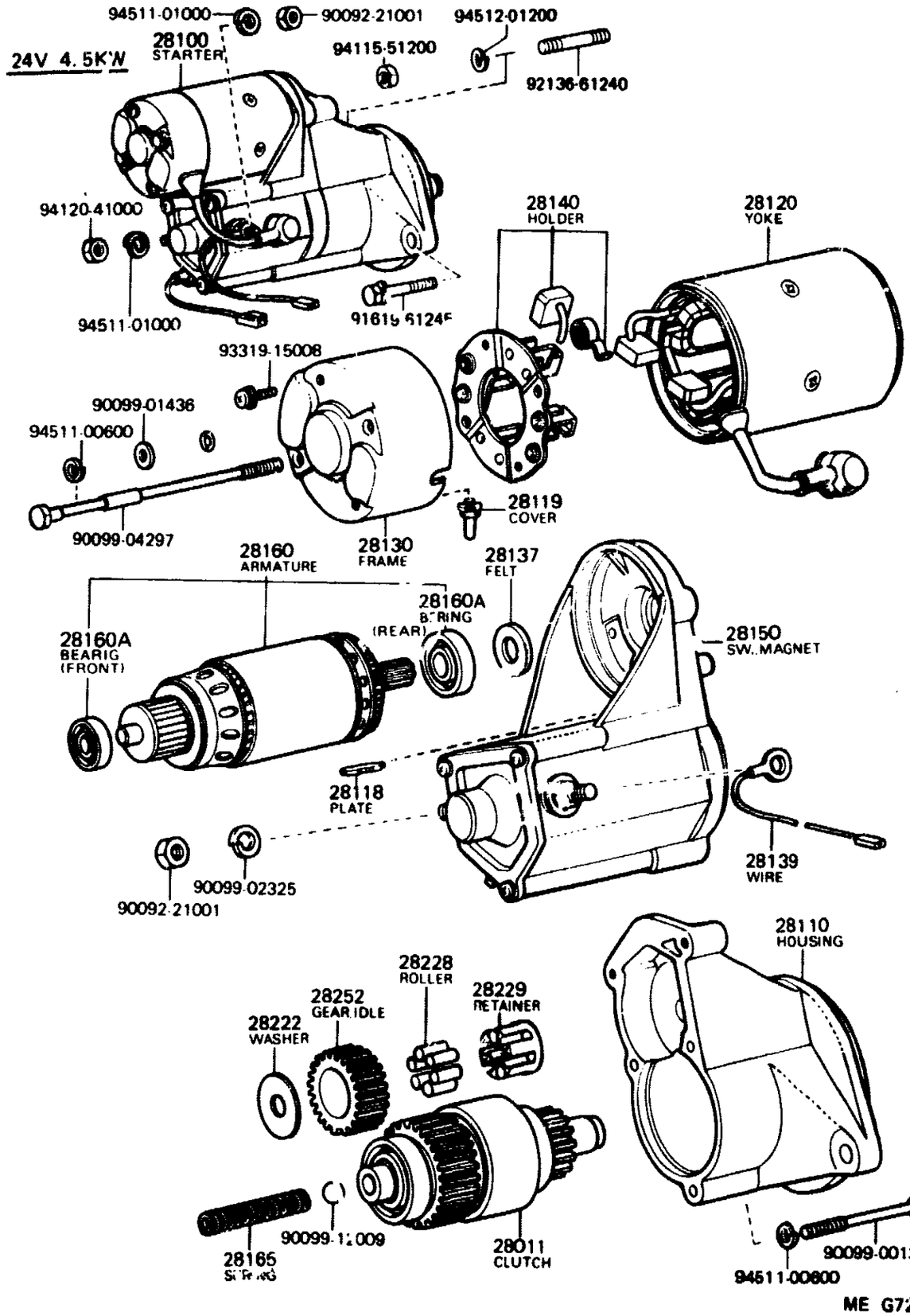

ME G729

PROD.DATE	MODELS	DESCRIPTION	R/P	PART NUMBER	QTY	REV.REF.CODE FROM	REV.REF.CODE UP TO
FIG.	19-04 STARTER						
	28011 CLUTCH SUB-ASSY, STARTER						
8008-8206	2F..FJ60	12V 1.0KW		28011-60041-	1	455	
8206-	2F..FJ60	12V 1.0KW		28011-26042-	1		
8008-	3B,2H..BJ60,HJ60	12V 2.5KW, 24V 4.5KW		28011-54010-	1	455	
	28012 BEARING SUB-ASSY, CENTER						
8008-8206	2F..FJ60	12V 1.0KW		28126-33021-	1	455	
	28100 STARTER ASSY						
8008-8206	2F..FJ60	12V 1.0KW		28100-60042-	1	455	
8206-	2F..FJ60	12V 1.0KW		28100-60070-	1		
8510-	2H..HJ60	24V 4.5KW		28100-47090-	1	567	
8008-8409	3B..BJ60	12V 2.5KW, W/EDIC	#	28100-56110- (28100-56111-)	1	455	
8409-8411	3B..BJ60	12V 2.5KW, W/EDIC		28100-56111-	1		514
8411-8510	3B..BJ60	12V 2.5KW		28100-56190-	1	515	566
	28110 HOUSING ASSY, STARTER DRIVE						
8008-8206	2F..FJ60	12V 1.0KW		28110-60042-	1	455	
8206-	2F..FJ60	12V 1.0KW		28110-60070-	1		
8510-	2H..HJ60	24V 4.5KW		28115-47070-	1	567	
8008-8411	3B..BJ60	12V 2.5KW		28115-56080-	1	455	514
8411-8510	3B..BJ60	12V 2.5KW		28115-56180-	1	515	566
	28111 BUSH (FOR STARTER HOUSING)						
8008-8206	2F..FJ60	12V 1.0KW		28111-51011-	1	455	
	28113 LEVER, STARTER PINION DRIVE						
8008-8206	2F..FJ60	12V 1.0KW		28113-41011-	1	455	
	28114 PIN, STARTER DRIVE LEVER SET						
8008-8206	2F..FJ60	12V 1.0KW		28114-41011-	1	455	
	28117 RUBBER (FOR STARTER YOKE)						
8008-8206	2F..FJ60	12V 1.0KW		28117-41020-	1	455	
	28118 PLATE (FOR STARTER YOKE)						
8008-	3B,2H..BJ60,HJ60	12V 2.5KW, 24V 4.5KW		28118-77090-	1	455	
	28119 COVER, END FRAME						
8101-8206	2F..FJ60	12V 1.0KW		28199-77090-	1		
8008-	3B,2H..BJ60,HJ60	12V 2.5KW, 24V 4.5KW	#	28119-77090- (28199-77090-)	1	455	
	28120 YOKE ASSY, STARTER						
8008-8206	2F..FJ60	12V 1.0KW		28120-42020-	1	455	
8206-	2F..FJ60	12V 1.0KW	#	28120-26070- (28120-26071-)	1		
8510-	2H..HJ60	24V 4.5KW	#	28120-77090- (28120-56071-)	1	567	
8008-8409	3B..BJ60	12V 2.5KW	#	28120-56110- (28120-56111-)	1	455	566
8409-8411	3B..BJ60	12V 2.5KW		28120-56111-	1		514
8411-8510	3B..BJ60	12V 2.5KW	#	28120-47040- (28120-56081-)	1	515	566
	28121 COIL, STARTER FIELD						
8008-8206	2F..FJ60	12V 1.0KW	#	28121-42020- (28121-34070-)	1	455	
	28123 CORE, STARTER POLE						
8008-8206	2F..FJ60	12V 1.0KW		28123-41020-	4	455	
	28125 BUSH, STARTER CENTER BEARING						
8008-8206	2F..FJ60	12V 1.0KW		28125-41020-	1	455	
	28130 FRAME ASSY, STARTER COMMUTATOR END						
8008-8101	2F..FJ60	12V 1.0KW		28130-41020-	1	455	
8101-8206	2F..FJ60	12V 1.0KW		28130-60042-	1		
8206-	2F..FJ60	12V 1.0KW		28130-34060-	1		
8510-	2H..HJ60	24V 4.5KW		28130-46030-	1	567	

GENUINE TOYOTA PARTS

PROD.DATE	MODELS	DESCRIPTION	R/P	PART NUMBER	QTY	REV.REF.CODE FROM	REV.REF.CODE UP TO
	28130 FRAME ASSY, STARTER COMMUTATOR END CONTINUED						
8008-8411	3B..BJ60	12V 2.5KW		28130-56080-	1	455	514
8411-8510	3B..BJ60	12V 2.5KW		28130-54010-	1	515	566
	28131 BUSH, COMMUTATOR END FRAME						
8008-8206	2F..FJ60	12V 1.0KW, STD		28131-20010-	1	455	
8008-8206	2F..FJ60	12V 1.0KW, U/S 0.3		90099-10039-	1	455	
8008-8206	2F..FJ60	12V 1.0KW, U/S 0.5		90099-10040-	1	455	
	28132 COVER, STARTER BEARING (FOR DRIVE HOUSING)						
8008-8206	2F..FJ60	12V 1.0KW		28166-41011-	1	455	
	28133 COVER, BEARING (FOR END FRAME)						
8008-8206	2F..FJ60	12V 1.0KW		28132-40010-	1	455	
	28136 PLATE, STARTER LOCK						
8008-8206	2F..FJ60	12V 1.0KW		28136-40010-	1	455	
	28137 WASHER, FELT, STARTER						
8206-8510	2F..FJ60	12V 1.0KW		90099-02323-	1		566
8008-	3B,2H..BJ60,HJ60	12V 2.5KW, 24V 4.5KW		90099-02205-	1	455	
	28138 RUBBER (FOR STARTER BEARING COVER)						
8008-8206	2F..FJ60	12V 1.0KW	#	28138-40010- (28138-26030-)	1	455	
	28139 WIRE, LEAD, NO.1 (FOR STARTER)						
8008-8411	3B..BJ60	12V 2.5KW		28139-77090-	1	455	514
8411-	3B,2H..BJ60,HJ60	12V 2.5KW, 24V 4.5KW		28139-47070-	1	515	
	28140 HOLDER ASSY, STARTER BRUSH						
8008-8206	2F..FJ60	12V 1.0KW		28140-41020-	1	455	
8206-	2F..FJ60	12V 1.0KW		28140-26070-	1		
8008-	3B,2H..BJ60,HJ60	12V 2.5KW, 24V 4.5KW		28140-77090-	1	455	

PROD.DATE	MODELS	DESCRIPTION	R/P	PART NUMBER	QTY	REV.REF.CODE FROM	REV.REF.CODE UP TO
	28142 BRUSH, STARTER						
8008-8206	2F..FJ60	12V 1.0KW, HOLDER		28142-10011-	2	455	
8008-8206	2F..FJ60	12V 1.0KW, YOKE		28142-25011-	2	455	
	28143 SPRING, STARTER BRUSH						
8008-8206	2F..FJ60	12V 1.0KW	#	28143-40010- (28143-40040-)	4	455	
8206-	2F..FJ60	12V 1.0KW		90099-17112-	4		
	28150 SWITCH ASSY, MAGNET STARTER						
8008-8206	2F..FJ60	12V 1.0KW		28150-60040-	1	455	
8206-	2F..FJ60	12V 1.0KW		28150-34080-	1		
8510-	2H..HJ60	24V 4.5KW		28150-47090-	1	567	
8008-8411	3B..BJ60	12V 2.5KW		28150-56080-	1	455	514
8411-8510	3B..BJ60	12V 2.5KW		28150-56190-	1	515	566
	28160 ARMATURE ASSY, STARTER						
8008-8206	2F..FJ60	12V 1.0KW		28160-41020-	1	455	
8206-	2F..FJ60	12V 1.0KW		28160-26070-	1		
8510-	2H..HJ60	24V 4.5KW		28160-77090-	1	567	
8008-8510	3B..BJ60	12V 2.5KW		28160-47040-	1	455	566
	28160A BEARING, STARTER ARMATURE						
8206-	2F..FJ60	12V 1.0KW, FR		28253-45020-	1		
8206-	2F..FJ60	12V 1.0KW, RR		90099-10113-	1		
8008-	3B,2H..BJ60,HJ60	12V 2.5KW, 24V 4.5KW, RR		90099-10107-	1	455	
8008-	3B,2H..BJ60,HJ60	12V 2.5KW, 24V 4.5KW, FR		90099-10119-	1	455	
	28162 SPRING, STARTER BRAKE						
8008-8206	2F..FJ60	12V 1.0KW		28162-41022-	1	455	

PROD.DATE	MODELS	DESCRIPTION	R/P	PART NUMBER	QTY	REV.REF.CODE FROM	REV.REF.CODE UP TO
	28163 NUT OR COLLAR, PINION STOP, STARTER						
8008-8206	2F..FJ60	12V 1.0KW		28163-40011-	1	455	
	28163A RING, SNAP (FOR STARTER PINION STOP NUT)						
8008-8206	2F..FJ60	12V 1.0KW		90099-07047-	1	455	
	28165 SPRING, STARTER MAGNET SWITCH RETURN						
8206-	2F..FJ60	12V 1.0KW		28165-26040-	1		
8008-	3B,2H..BJ60,HJ60	12V 2.5KW, 24V 4.5KW		28165-77090-	1	455	
	28172 HOLDER, STARTER SPRING						
8008-8206	2F..FJ60	12V 1.0KW		28172-41021-	1	455	
	28222 WASHER, STARTER IDLE GEAR CLUTCH						
8008-	3B,2H..BJ60,HJ60	12V 2.5KW, 24V 4.5KW		28222-77090-	1	455	
	28228 ROLLER, STARTER IDLE GEAR CLUTCH						
8206-	2F..FJ60	12V 1.0KW		28228-26040-	5		
8008-	3B,2H..BJ60,HJ60	12V 2.5KW, 24V 4.5KW		28228-56080-	6	455	
	28229 RETAINER, STARTER IDLE GEAR						
8206-	2F..FJ60	12V 1.0KW		28229-26040-	1		
8008-	3B,2H..BJ60,HJ60	12V 2.5KW, 24V 4.5KW		28229-56080-	1	455	
	28252 GEAR, STARTER IDLE						
8206-	2F..FJ60	12V 1.0KW		28254-45020-	1		
8008-	3B,2H..BJ60,HJ60	12V 2.5KW, 24V 4.5KW		28254-77090-	1	455	

PROD.DATE	MODELS	DESCRIPTION	R/P	PART NUMBER	QTY	REV.REF.CODE FROM	REV.REF.CODE UP TO

(8008-8204)3B

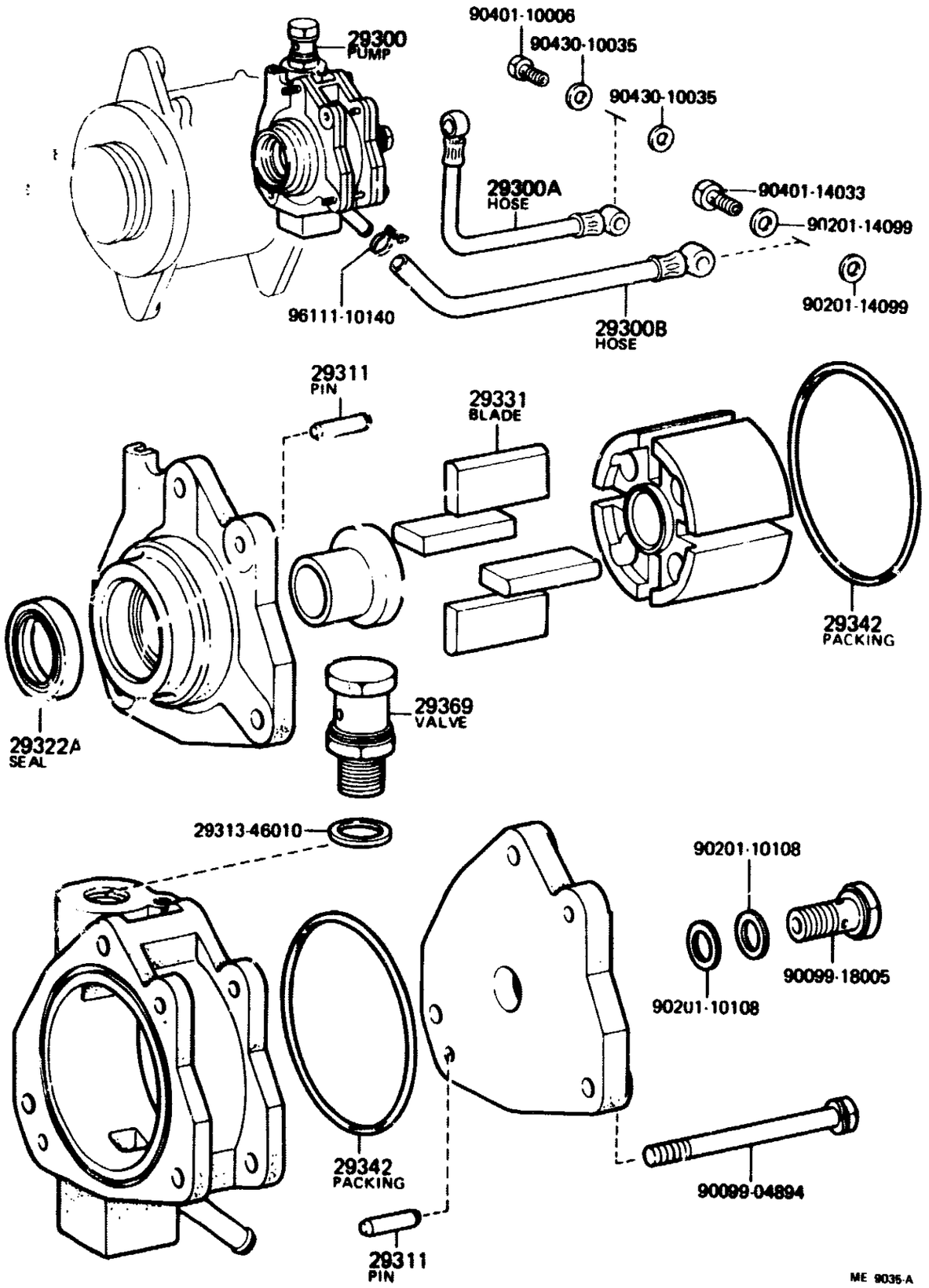

ME 9035-A

(8204-8510)3B; (8510-)2H

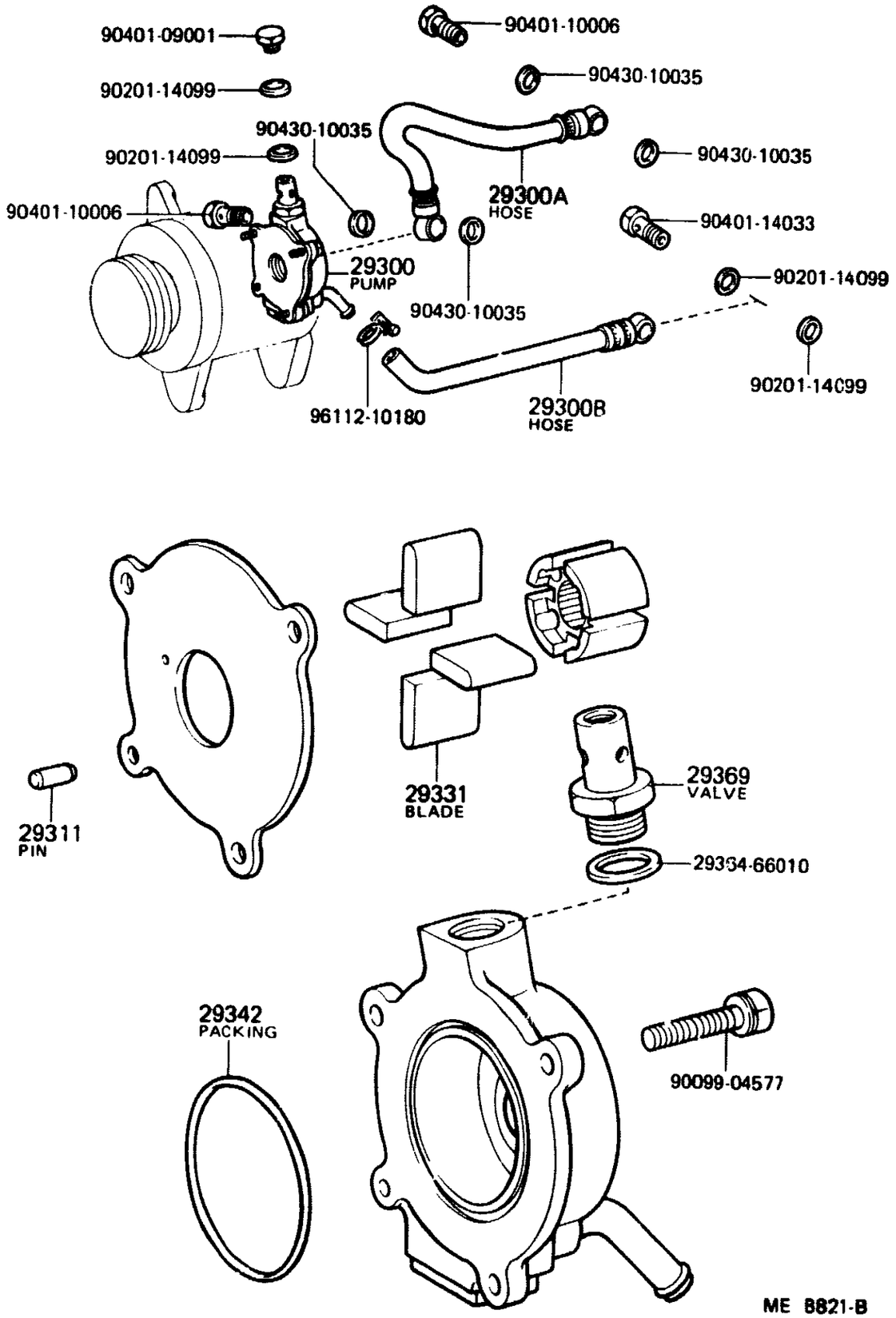

ME 8821-B

PROD.DATE	MODELS	DESCRIPTION	R/P	PART NUMBER	QTY	REV.REF.CODE FROM	REV.REF.CODE UP TO
FIG.	19-05 VACUUM PUMP						
	29300	PUMP ASSY, VACUUM					
8510-	2H..HJ60			# 29300-68010- (29300-54050-)	1	567	
8008-8204	3B..BJ60			29300-57011-	1	455	
8204-8510	3B..BJ60			29300-56070-	1		566
	29300A	HOSE, VACUUM PUMP OIL INLET					
8510-	2H..HJ60			90923-02100-	1	567	
8008-8204	3B..BJ60			90923-02062-	1	455	
8204-8510	3B..BJ60			90923-02072-	1		566
	29300B	HOSE, VACUUM PUMP OIL OUTLET					
8510-	2H..HJ60			90923-02079-	1	567	
8008-8204	3B..BJ60			90923-02065-	1	455	
8204-8510	3B..BJ60			90923-02073-	1		566
	29311	PIN, VACUUM PUMP DRIVEN, 1					
8008-8204	3B..BJ60			900 9-0 082	4	455	
8204-	3B,2H..BJ60,HJ60			# 311-7601(90099-(3082)	1		
	29322A	SEAL, VACUUM PUMP OIL					
8008-8204	3B..BJ60			90099-15017-	1	455	
	29331	BLADE, VACUUM PUMP, A					
8008-8204	3B..BJ60			29331-56010-	4	455	
8204-	3B,2H..BJ60,HJ60			29331-56070-	4		
	29342	PACKING, VACUUM PUMP					
8008-8204	3B..BJ60			96740-02063-	2	455	
8204-	3B,2H..BJ60,HJ60				1		
	29369	VALVE SUB-ASSY, CHECK					
8008-8204	3B..BJ60			29369-54010-	1	455	
8204-	3B,2H..BJ60,HJ60			29369-56070-	1		

PROD.DATE	MODELS	DESCRIPTION	R/P	PART NUMBER	QTY	REV.REF.CODE FROM	REV.REF.CODE UP TO

FIG.21-01 FUEL PIPE & CLAMP

(8008-)2F

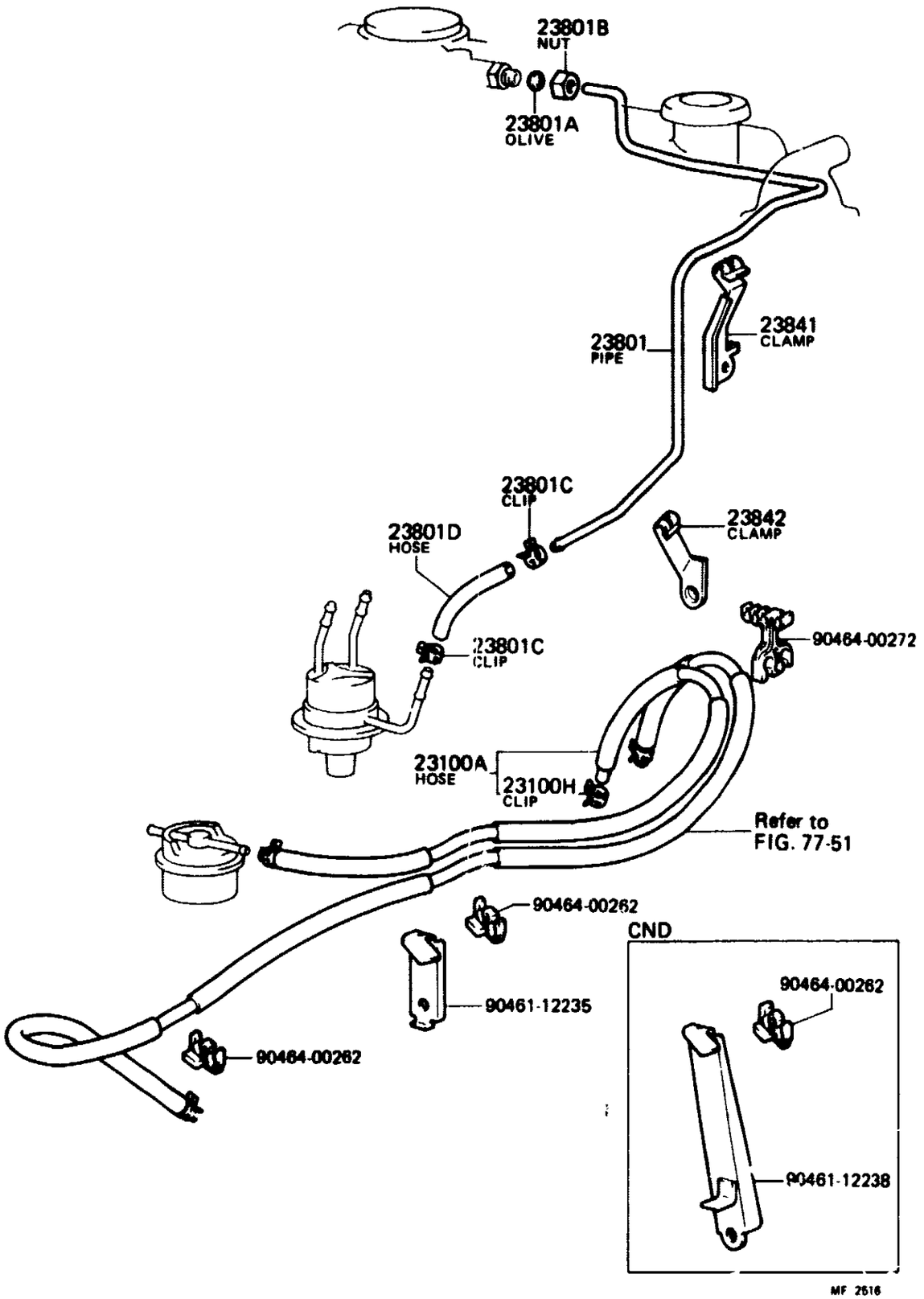

* H, L = Cut hose to length as specified in remarks

GENUINE TOYOTA PARTS

PROD.DATE	MODELS	DESCRIPTION	R/P	PART NUMBER	QTY	REV.REF.CODE FROM	REV.REF.CODE UP TO
FIG.	21-01 FUEL PIPE & CLAMP						
	23100A HOSE, FUEL						
8008-	2F..FJ60			23820-61060-	1	455	
	23100H CLIP (FOR FUEL HOSE)						
8008-	2F..FJ60			96132-30800-	2	455	
	23801 PIPE OR HOSE SUB-ASSY, CARBURETOR FUEL, NO.1						
8008-	2F..FJ60			23811-61032-	1	455	
	23801A OLIVE (FOR FUEL PIPE)						
8008-	2F..FJ60			96395-71400-	1	455	
	23801B NUT, UNION (FOR FUEL PIPE)						
8008-	2F..FJ60			90402-13041-	1	455	
	23801C CLIP (FOR CARBURETOR FUEL HOSE)						
8008-	2F..FJ60			96132-30800-	2	455	
	23801D HOSE, FUEL PIPE, NO.1						
8008-	2F..FJ60	*H,L=130		95332-08020-	1	455	
	23841 CLAMP, FUEL PIPE (HOSE), NO.1						
8008-	2F..FJ60			23841-61021-	1	455	
	23842 CLAMP, FUEL PIPE (HOSE), NO.2						
8008-	2F..FJ60			23842-61031-	1	455	

FIG. 21-02 CARBURETOR ASSEMBLY

1-J8

GENUINE TOYOTA PARTS

(8008-)2F

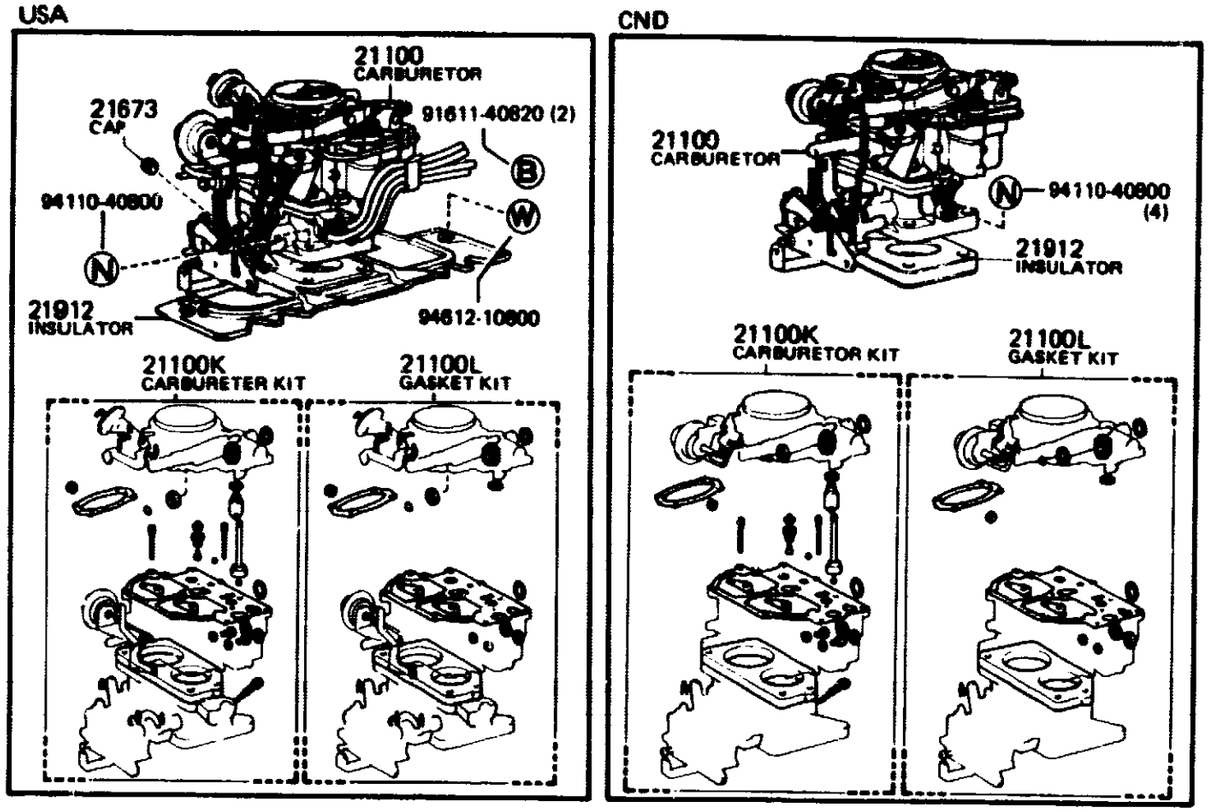

MF 2521 A

PROD.DATE	MODELS	DESCRIPTION	R/P	PART NUMBER	QTY	REV.REF.CODE FROM	REV.REF.CODE UP TO
FIG.	21-02 CARBURETOR ASSEMBLY						
	21100 CARBURETOR ASSY						
8110-8604	2F••FJ60			# 21100-61141- (21100-61142-)	1	459	572
8604-	2F••FJ60			21100-61142-	1	573	
8008-8110	2F••FJ60••CND			21100-61102-	1	455	458
8008-8110	2F••FJ60••USA			# 21100-61140- (21100-61141-)	1	455	458
	21100K CARBURETOR KIT						
8006-8110	2F••FJ60••CND			04211-61140-	1	455	458
8008-	2F••FJ60••USA			04211-61170-	1	455	
	21100L GASKET KIT, CARBURETOR						
8008-	2F••FJ60			04212-61030-	1	455	
	21673 CAP, IDLE LIMIT						
8008-8305	2F••FJ60••USA			21673-38020-	1	455	490
	21912 INSULATOR, CARBURETOR HEAT						
8008-8110	2F••FJ60••CND			21912-61020-	1	455	458
8008-	2F••FJ60••USA			21912-61032-	1	455	

FIG.21-03 CARBURETOR

1-K8

MR4-11-0401

(8008-)2F..USA

21112
21832
21699
※1 21738
21414
21751
21621
21934F
21934E
21934
21821-31140 (5)
21791
94511-00400
21831
21192
21791
21235-61140
21821-15060 (2)
21618
21301
21791
94611-10300
21209
21763
21821-25180 (2)
21821-34370 (4)
21659-38110
21647
※2
21867
21698
21645
21659-38110
21614
21614
21821-24030 (4)
21024
21257B
21313
23537-44020 (2)
21191
94511-00800
21346
21346A
21273
21791
21791
21791
21756
21726
21274
21724
21734
21351
94511-00400
21831
21341
21255
21353
21205
21722
21538
21314
21622
21165
21271
21723
21791
94512-00600
21791
21834
21576-27010
21826
21873-21010
21735
94611-10400
21625
21842
21291
21253
21617
21611
21781
21271A
94511-00800
21392
21781
21617
21611
21251
95411-19930 (L=200)
95411-19930 (L=160)
21234-61140
95411-19930 (L=220)
※2 21908B
※2
21821-34380
94611-10400
※2
※2
21667
※2 21791
※2 21275
※2 21731
21576-27010
※2 21821-38010
※1(-8510)
※2(8604-)

MF 2526-D

MF2526C

FIG.21-03 CARBURETOR

1-L8

NR4-11-0402

(8008-8110)2F..CND

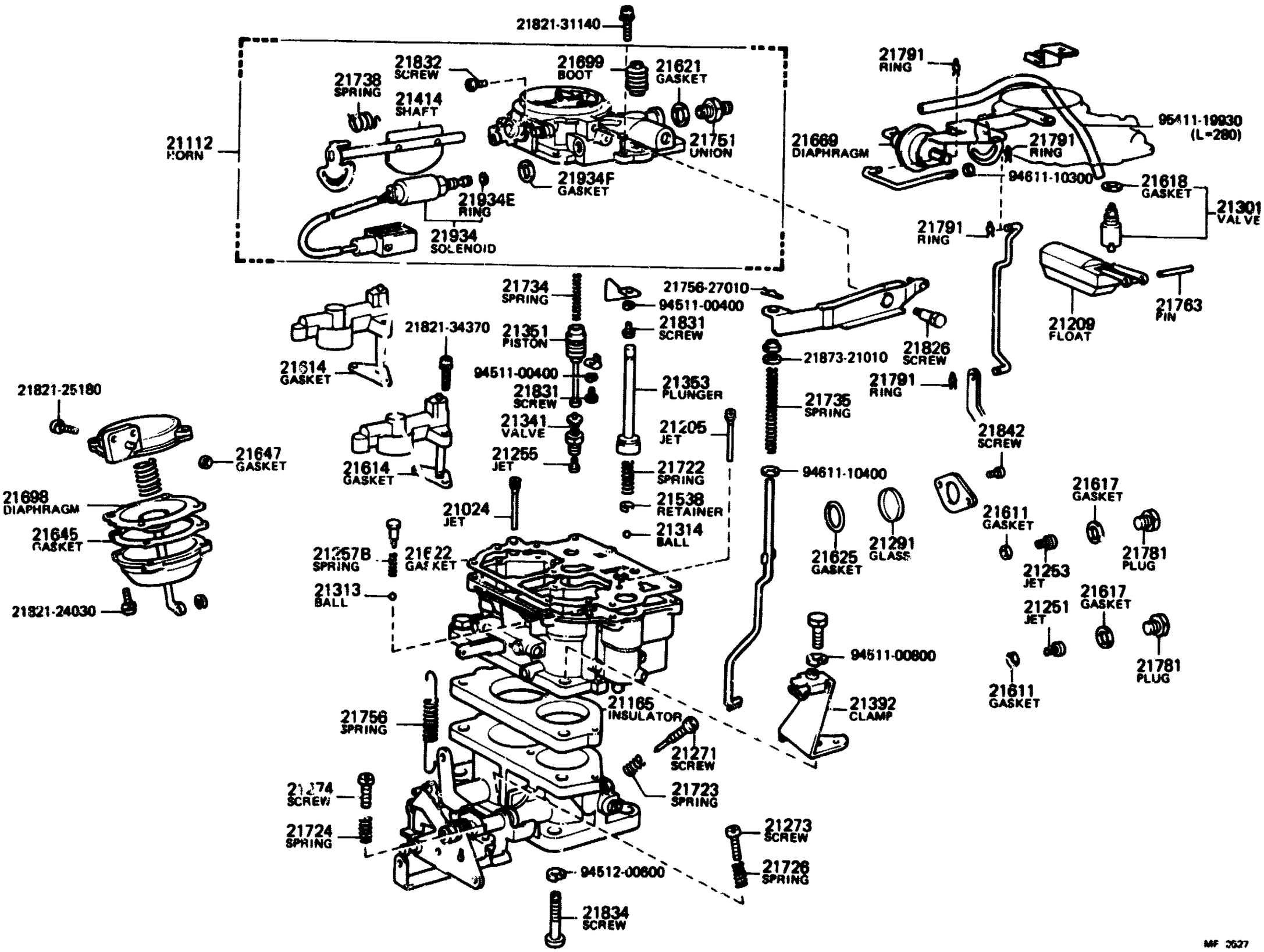

MF2527

PROD.DATE	MODELS	DESCRIPTION	R/P	PART NUMBER	QTY	REV.REF.CODE FROM	REV.REF.CODE UP TO
FIG.	21-03 CARBURETOR						
	21024 JET SUB-ASSY, 2ND						
8008-	2F..FJ60			21024-61010-	1	455	
	21112 HORN, AIR						
8008-8110	2F..FJ60..CND			21112-61112-	1	455	458
8008-	2F..FJ60..USA			21112-61140-	1	455	
	21165 INSULATOR						
8008-	2F..FJ60			21165-61010-	1	455	
	21191 OPENER						
8008-	2F..FJ60..USA			21191-61140-	1	455	
	21192 BREAKER						
8008-	2F..FJ60..USA			21192-61020-	1	455	
	21205 JET SUB-ASSY, SLOW						
8008-	2F..FJ60			21205-61011-	1	455	
	21209 FLOAT SUB-ASSY						
8008-	2F..FJ60			21209-33011-	1	455	
	21251 JET, 1ST MAIN						
8008-8110	2F..FJ60..CND	ID=1.38		90999-41138-	1	455	458
8008-	2F..FJ60..USA	ID=1.47		90999-41147-	1	455	
	21253 JET, 2ND MAIN						
8008-	2F..FJ60	ID=2.00		90999-42200-	1	455	
	21255 JET, POWER						
8008-	2F..FJ60	ID=0.80		90999-43080-	1	455	
	21257B SPRING (FOR PUMP JET)						
8008-	2F..FJ60			21864-26020-	1	455	
	21271 SCREW, IDLE ADJUSTING						
8008-8110	2F..FJ60..CND			21271-61061-	1	455	458

GENUINE TOYOTA PARTS

PROD.DATE	MODELS	DESCRIPTION	R/P	PART NUMBER	QTY	REV.REF.CODE FROM	REV.REF.CODE UP TO
	21271 SCREW, IDLE ADJUSTING CONTINUED						
8008-	2F..FJ60..USA			21271-61140-	1	455	
	21271A PLUG, IDLE LIMIT						
8008-	2F..FJ60..USA			21673-61140-	1	455	
	21273 SCREW, THROTTLE ADJUSTING						
8008-8110	2F..FJ60..CND			21273-38010-	1	455	458
8008-	2F..FJ60..USA			21273-61140-	1	455	
	21274 SCREW, 1ST THROTTLE ADJUSTING						
8008-8110	2F..FJ60..CND			21273-30052-	1	455	458
8008-	2F..FJ60..USA			21272-61140-	1	455	
	21275 SCREW, ADJUSTING						
8604-	2F..FJ60			21273-30052-	1	573	
	21291 GLASS, LEVEL GAGE						
8008-	2F..FJ60			21291-34320-	1	455	
	21301 VALVE SUB-ASSY, NEEDLE						
8008-8110	2F..FJ60..CND			21301-61050-	1	455	458
8008-	2F..FJ60..USA			21301-61023-	1	455	
	21313 BALL, STEEL, NO.1 (FOR DISCHARGE WEIGHT)						
8008-	2F..FJ60			21313-11020-	1	455	
	21314 BALL, STEEL, NO.2 (FOR PUMP PLUNGER)						
8008-	2F..FJ60			21314-11020-	1	455	
	21341 VALVE, POWER						
8008-	2F..FJ60			21304-61060-	1	455	
	21346 VALVE, SECONDARY SLOW CUT						
8008-	2F..FJ60..USA			21346-61140-	1	455	
	21346A GASKET, SECONDARY SLOW CUT VALVE						
8008-	2F..FJ60..USA			21641-38310-	1	455	

PROD.DATE	MODELS	DESCRIPTION	R/P	PART NUMBER	QTY	REV.REF.CODE FROM	REV.REF.CODE UP TO
	21351	PISTON, POWER					
8008-	2F..FJ60			21351-34030-	1	455	
	21353	PLUNGER, PUMP					
8008-	2F..FJ60			21353-61020-	1	455	
	21392	CLAMP, CHOKE WIRE					
8008-	2F..FJ60			21392-61020-	1	455	
	21414	SHAFT, CHOKE					
8008-8110	2F..FJ60..CND			21054-61020-	1	455	458
8008-	2F..FJ60..USA			21054-61140-	1	455	
	21538	RETAINER, BALL CHECK					
8008-	2F..FJ60			21538-31010-	1	455	
	21611	GASKET, MAIN JET					
8008-	2F..FJ60			21611-22010-	2	455	
	21614	GASKET, VENTURI					
8008-	2F..FJ60			21614-60200-	2	455	
	21617	GASKET, MAIN PASSAGE PLUG					
8008-	2F..FJ60			21617-30010-	2	455	
	21619	GASKET, NEEDLE VALVE SEAT					
8008-	2F..FJ60			21618-14010-	1	455	
	21621	GASKET, UNION NIPPLE					
8008-	2F..FJ60			21633-24030-	1	455	
	21622	GASKET, AIR HORN					
8008-	2F..FJ60			21622-61010-	1	455	
	21625	GASKET, LEVEL GAGE					
8008-	2F..FJ60			21655-60200-	1	455	
	21645	GASKET, DIAPHRAGM, CAP					
8008-	2F..FJ60			21645-33080-	1	455	
	21647	GASKET, DIAPHRAGM HOUSING CAP					
8008-	2F..FJ60			21649-33080-	1	455	
	21667	DIAPHRAGM					
8604-	2F..FJ60			21667-61140-	1	573	
	21669	DIAPHRAGM					
8008-8110	2F..FJ60..CND			21669-61011-	1	455	458
	21698	DIAPHRAGM					
8008-	2F..FJ60			21669-61100-	1	455	
	21699	BOOT (FOR PUMP PLUNGER)					
8008-	2F..FJ60			21699-61010-	1	455	
	21722	SPRING, PUMP DAMPING					
8008-	2F..FJ60			21722-60200-	1	455	
	21723	SPRING, IDLE ADJUSTING					
8008-8110	2F..FJ60..CND			21723-21030-	1	455	458
8008-	2F..FJ60..USA			21723-61140-	1	455	
	21724	SPRING, THROTTLE ADJUSTING					
8008-8110	2F..FJ60..CND			21723-21030-	1	455	458
8008-	2F..FJ60..USA			21723-61140-	1	455	
	21726	SPRING, 1ST IDLE ADJUSTING					
8008-8110	2F..FJ60..CND			21723-11041-	1	455	458
8008-	2F..FJ60..USA			21724-61140-	1	455	
	21731	SPRING, DASH POT OR POSITIONER ADJUSTING					
8604-	2F..FJ60			21723-21030-	1	573	
	21734	SPRING, POWER PISTON					
8008-	2F..FJ60			21734-21030-	1	455	

PROD.DATE	MODELS	DESCRIPTION	R/P	PART NUMBER	QTY	REV.REF.CODE FROM	REV.REF.CODE UP TO	
	21735	SPRING, PUMP ARM						
8008-	2F••FJ60			21735-44010-	1	455		C
	21738	SPRING, CHOKE VALVE RELIEF						
8008-8510	2F••FJ60			21738-60070-	1	455	566	C
	21751	UNION, NIPPLE						
8008-	2F••FJ60			21894-61020-	1	455		
	21756	SPRING, BACK (FOR THROTTLE SHAFT)						
8008-	2F••FJ60			21756-61010-	1	455		
	21763	PIN, FLOAT LEVER						
8008-	2F••FJ60			21763-38010-	1	455		
	21781	PLUG, MAIN PASSAGE (FOR CARBURETOR JET)						
8008-8604	2F••FJ60			21781-30020-	2	455	572	
8604-	2F••FJ60			21781-15230-	2	573		
	21791	RING, SNAP, NO.1 (FOR CARBURETOR LINK)						
8008-	2F••FJ60			21791-60010-	9	455		
	21826	SCREW, PUMP ARM SET						
8008-	2F••FJ60			21826-24470-	1	455		
	21831	SCREW, POWER PISTON STOP						
8008-8604	2F••FJ60			21842-33010-	2	455	572	
8604-	2F••FJ60			21842-60280-	2	573		
	21832	SCREW (FOR CHOKE LEVER ADAPTOR SET)						
8008-	2F••FJ60			21832-33010-	3	455		
	21834	SCREW, SET, NO.2 (FOR CARBURETOR BODY SET)						
8008-	2F••FJ60			21834-31140-	1	455		
	21842	SCREW, SET (FOR CARBURETOR LEVEL GAGE CLAMP SET)						
8008-	2F••FJ60			21842-33010-	2	455		

PROD.DATE	MODELS	DESCRIPTION	R/P	PART NUMBER	QTY	REV.REF.CODE FROM	REV.REF.CODE UP TO
	21867	SPRING, DIAPHRAGM					
8604-	2F••FJ60••USA			21867-25010-	1	573	
	21908B	ACTUATOR SET, IDLE-UP					
8604-	2F••FJ60••USA			88071-60010-	1	573	
	21934	SOLENOID, THROTTLE VALVE					
8008-8110	2F••FJ60••CND			21062-61021-	1	455	458
8008-	2F••FJ60••USA			21062-61060-	1	455	
	21934E	RING, O (FOR SOLENOID VALVE)					
8008-	2F••FJ60			21655-44101-	1	455	
	21934F	GASKET, SOLENOID VALVE					
8008-	2F••FJ60			21649-38010-	1	453	

(8008-8510)5B

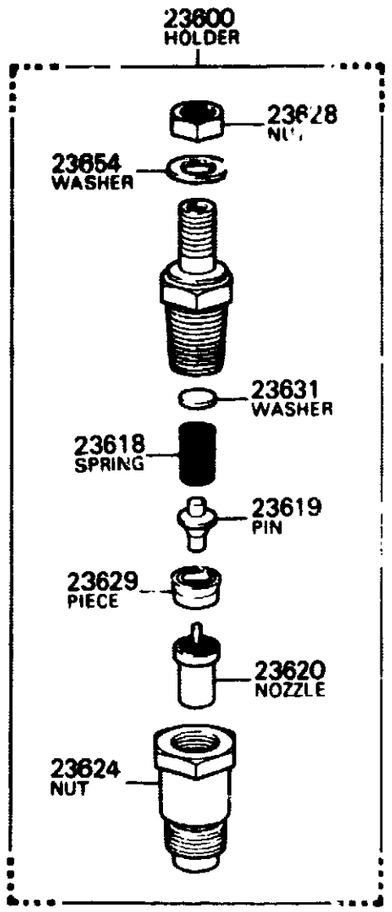

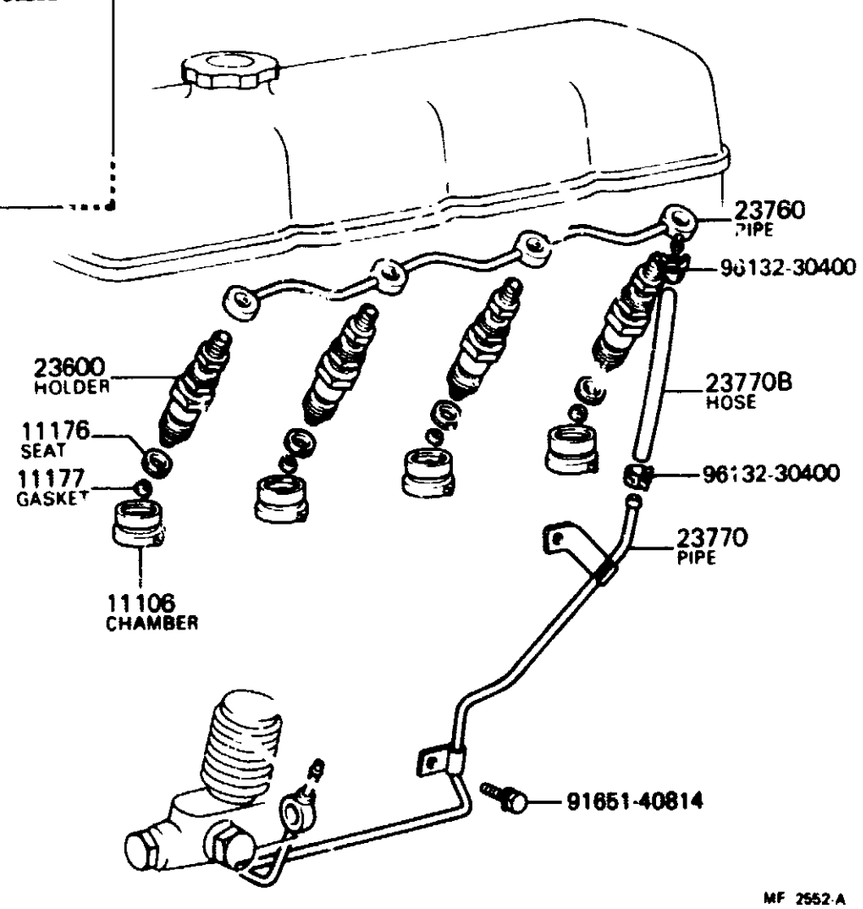

MF 2552-A

(8510-)2H

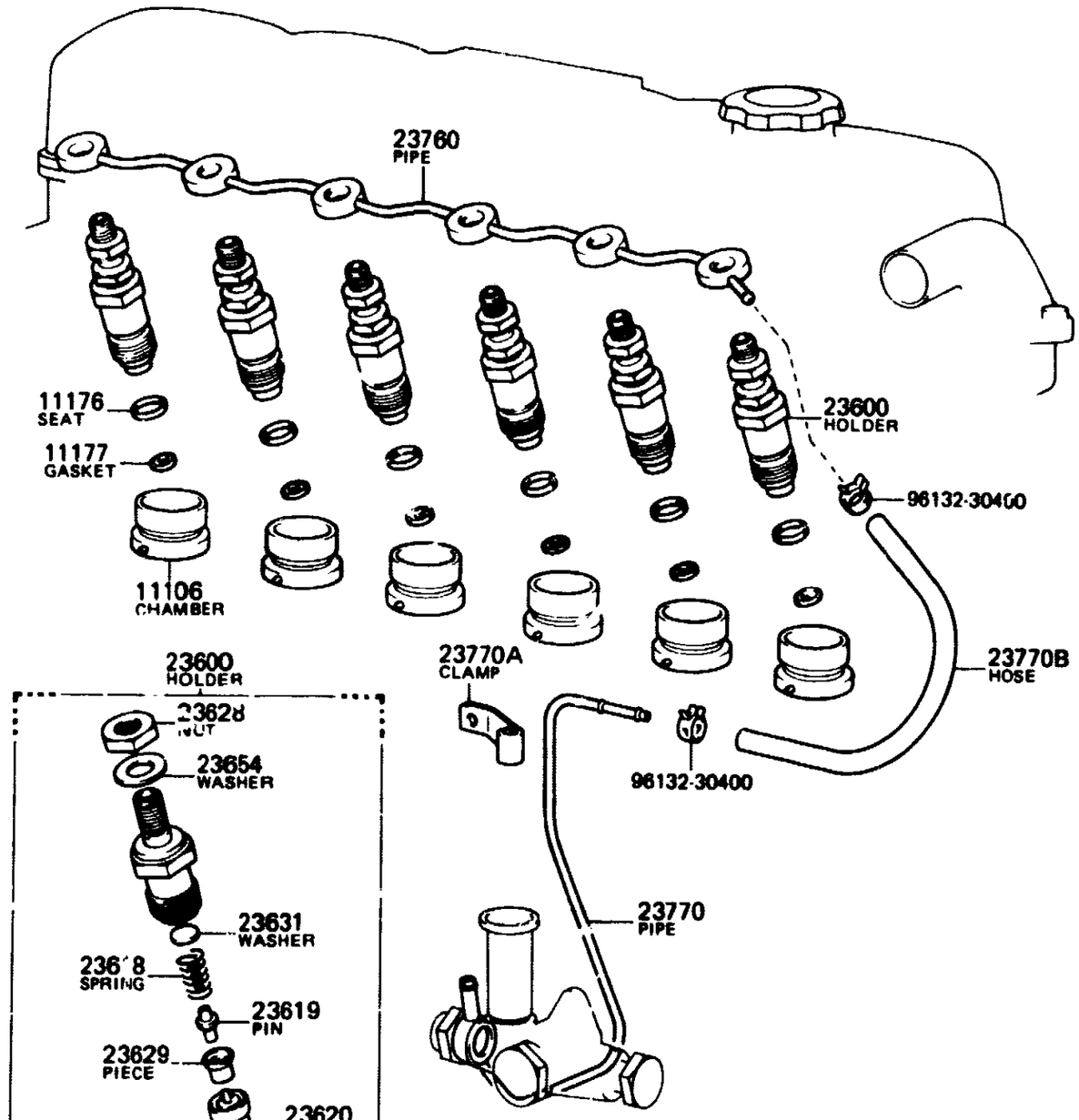

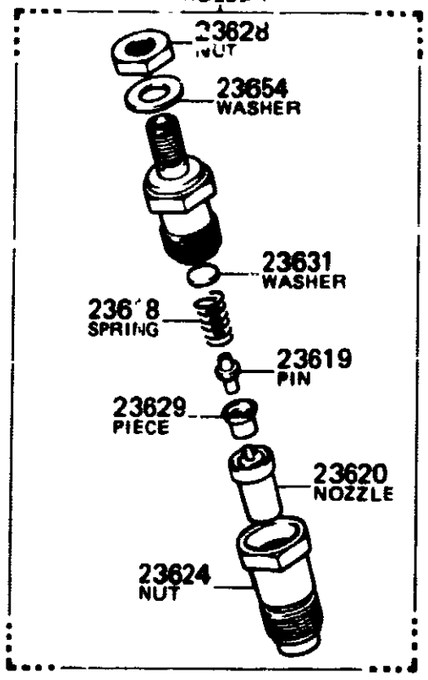

MF 2537

PROD.DATE	MODELS	DESCRIPTION	R/P	PART NUMBER	QTY	REV.REF.CODE FROM	REV.REF.CODE UP TO
FIG.	22-01 INJECTION NOZZLE						
	11106 CHAMBER SUB-ASSY, COMBUSTION						
8510-	2H..HJ60			11106-68011-	6	567	
8008-8502	3B..BJ60			11106-58010-	4	455	
8502-8503	3B..BJ60			# 11106-58011- (11106-58010-)	4		
8503-8510	3B..BJ60			11106-58010-	4		566
	11176 SEAT, INJECTION NOZZLE						
8008-	3B,2H..BJ60,HJ60			11176-56010-	6	455	
	11177 GASKET, INJECTION NOZZLE SEAT						
8510-	2H..HJ60			11177-47010-	6	567	
8008-8510	3B..BJ60			11177-56010-	4	455	566
	23600 HOLDER AND NOZZLE SET, NOZZLE						
8510-	2H..HJ60			23600-68020-	6	567	
8008-8210	3B..BJ60			23600-56011-	4	455	466
8210-8510	3B..BJ60			23600-68010-	4	467	566
	23618 SPRING, NOZZLE HOLDER PRESSURE						
8008-	3B,2H..BJ60,HJ60			23618-56010-	6	455	
	23619 PIN, NOZZLE HOLDER PRESSURE						
8008-	3B,2H..BJ60,HJ60			23619-46010-	6	455	
	23620 NOZZLE ASSY						
8510-	2H..HJ60			23620-68020-	6	567	
8008-8210	3B..BJ60			23620-54010-	4	455	466
8210-8510	3B..BJ60			23620-68010-	4	467	566
	23624 NUT, NOZZLE RETAINING						
8008-8210	3B..BJ60			23624-47011-	4	455	466
8210-	3B,2H..BJ60,HJ60			23624-54020-	6	467	
	23628 NUT (FOR RING PACKING SETTING)						
8008-	3B,2H..BJ60,HJ60			23628-46010-	6	455	
	23629 PIECE, DISTANCE (FOR NOZZLE)						
8008-	3B,2H..BJ60,HJ60			23629-46010-	6	455	
	23631 WASHER (FOR NOZZLE HOLDER PRESSURE SPRING)						
8008-	3B,2H..BJ60,HJ60	T=1.00		23631-46010-	33	455	
8008-	3B,2H..BJ60,HJ60	T=1.05		23632-46010-	33	455	
8008-	3B,2H..BJ60,HJ60	T=1.10		23633-46010-	33	455	
8008-	3B,2H..BJ60,HJ60	T=1.15		23634-46010-	33	455	
8008-	3B,2H..BJ60,HJ60	T=1.20		23635-46010-	33	455	
8008-	3B,2H..BJ60,HJ60	T=1.25		23636-46010-	33	455	
8008-	3B,2H..BJ60,HJ60	T=1.30		23637-46010-	33	455	
8008-	3B,2H..BJ60,HJ60	T=1.35		23638-46010-	33	455	
8008-	3B,2H..BJ60,HJ60	T=1.40		23639-46010-	33	455	
8008-	3B,2H..BJ60,HJ60	T=1.45		23641-46010-	33	455	
8008-	3B,2H..BJ60,HJ60	T=1.50		23642-46010-	33	455	
8008-	3B,2H..BJ60,HJ60	T=1.55		23643-46010-	33	455	
8008-	3B,2H..BJ60,HJ60	T=1.60		23644-46010-	33	455	
8008-	3B,2H..BJ60,HJ60	T=1.65		23645-46010-	33	455	
8008-	3B,2H..BJ60,HJ60	T=1.70		23646-46010-	33	455	
8008-	3B,2H..BJ60,HJ60	T=1.75		23647-46010-	33	455	
8008-	3B,2H..BJ60,HJ60	T=1.80		23648-46010-	33	455	
8008-	3B,2H..BJ60,HJ60	T=1.85		23649-46010-	33	455	
8008-	3B,2H..BJ60,HJ60	T=1.90		23651-46010-	33	455	
8008-	3B,2H..BJ60,HJ60	T=1.95		23652-46010-	33	455	
	23654 WASHER (FOR RING PACKING)						
8008-	3B,2H..BJ60,HJ60			23654-46010-	33	455	
	23760 PIPE ASSY, NOZZLE LEAKAGE						
8510-	2H..HJ60			23760-68010-	1	567	
8008-8204	3B..BJ60			# 23760-56020- (23760-56021-)	1	455	
8204-8208	3B..BJ60			# 23760-56021- (23760-56022-)	1		
8208-8510	3B..BJ60			23760-56022-	1		566

FIG.22-01 **GENUINE TOYOTA PARTS** 1-E9 **GENUINE TOYOTA PARTS**

PROD.DATE	MODELS	DESCRIPTION	R/P	PART NUMBER	QTY	REV.REF.CODE FROM	REV.REF.CODE UP TO
	23770 PIPE ASSY, NOZZLE LEAKAGE, NO.2						
8510-	2H..HJ60			23770-68012-	1	567	
8008-8409	3B..BJ60			23770-56030-	1	455	
8409-8510	3B..BJ60		#	23770-56050- (23770-56051-)	1		566
	23770A CLAMP OR CLIP (FOR NOZZLE LEAKAGE PIPE SET)						
8510-	2H..HJ60			90461-08515-	1	567	
	23770B HOSE, FUEL						
8510-	2H..HJ60			95332-04020-	1	567	
8008-8510	3B..BJ60	*H,L=110			1	455	566

PROD.DATE	MODELS	DESCRIPTION	R/P	PART NUMBER	QTY	REV.REF.CODE FROM	REV.REF.CODE UP TO

* H, L = Cut hose to length as specified in remarks

FIG.22-02 INJECTION PUMP ASSEMBLY

1-F9

MR4-11-0404

(8008-8510)3B

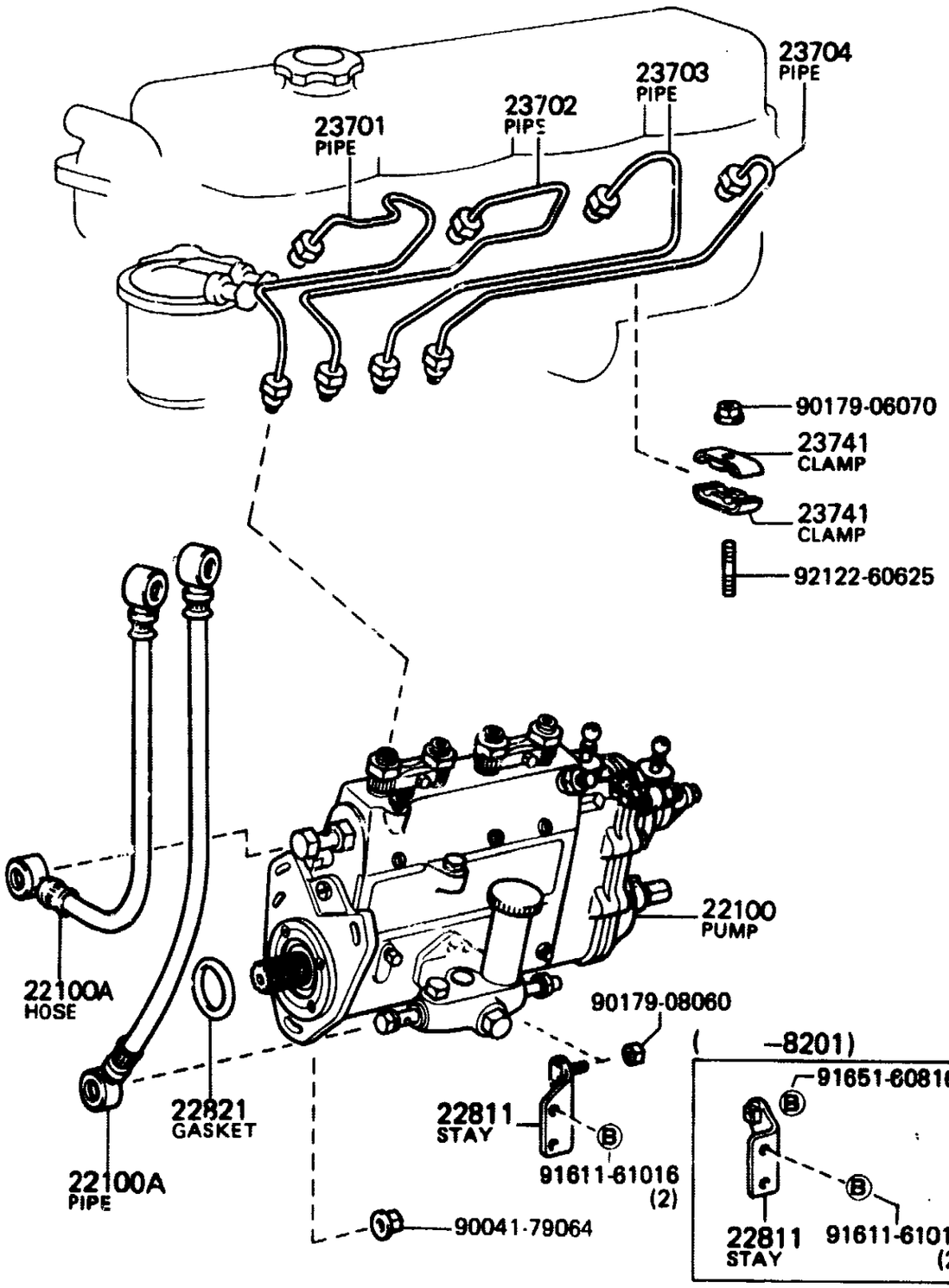

MF 2553-F

(8510-)2H

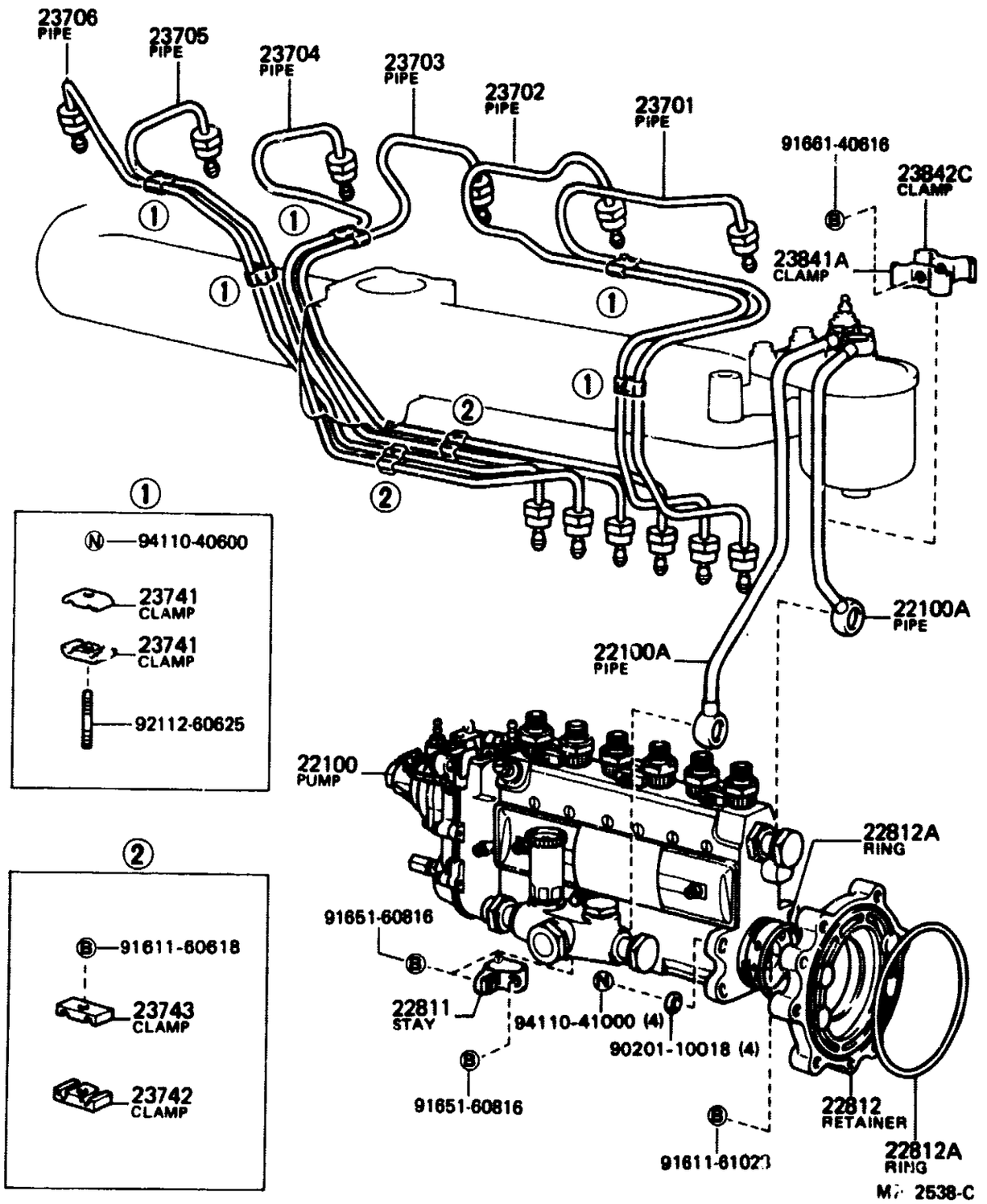

MF 2538-C

PROD.DATE	MODELS	DESCRIPTION	R/P	PART NUMBER	QTY	REV.REF.CODE FROM	REV.REF.CODE UP TO
FIG. 22-02 INJECTION PUMP ASSEMBLY							
	22100 PUMP ASSY, INJECTION						
8510-	2H..HJ60..ATM			22100-68130-	1	567	
8510-	2H..HJ60..MTM			22100-68051-	1	567	
8008-8201	3B..BJ60			22100-58020-	1	455	476
8201-8411	3B..BJ60			22100-58021-	1	477	514
8411-8510	3B..BJ60			22100-58022-	1	515	566
	22100A HOSE OR PIPE, FUEL (FOR INJECTION PUMP TO FUEL FILTER)						
8510-	2H..HJ60	FEED PUMP TO FILTER		23801-68030-	1	567	
8510-	2H..HJ60	FILTER TO PUMP		23802-68020-	1	567	
8008-8409	3B..BJ60	FEED PUMP TO FILTER		23801-56040-	1	455	
8008-8510	3B..BJ60	FILTER TO INJECTION PUMP		23802-56040-	1	455	566
8409-8510	3B..BJ60	FEED PUMP TO FILTER		23801-56060-	1		566
	22811 STAY, INJECTION PUMP						
8510-	2H..HJ60			22811-68010-	1	567	
8008-8201	3B..BJ60			22811-56010-	1	455	476
8201-8510	3B..BJ60			22811-56011-	1	477	566
	22812 RETAINER, INJECTION PUMP						
8510-	2H..HJ60			22812-68010-	1	567	
	22312A RING, O						
8510-	2H..HJ60	PUMP SIDE		90301-64004-	1	567	
8510-	2H..HJ60	CASE SIDE		90301-99013-	1	567	
	22821 GASKET, INJECTION PUMP						
8008-8510	3B..BJ60			90301-77001-	1	455	566
	23701 PIPE SUB-ASSY, INJECTION, NO.1						
8510-	2H..HJ60			23701-68010-	1	567	
	23701 CONTINUED						
8008-8510	3B..BJ60			23701-56030-	1	455	566
	23702 PIPE SUB-ASSY, INJECTION, NO.2						
8510-	2H..HJ60			23702-68010-	1	567	
8008-8510	3B..BJ60			23702-56030-	1	455	566
	23703 PIPE SUB-ASSY, INJECTION, NO.3						
8510-	2H..HJ60			23703-68010-	1	567	
8008-8510	3B..BJ60			23703-56020-	1	455	566
	23704 PIPE SUB-ASSY, INJECTION, NO.4						
8510-	2H..HJ60			23704-68010-	1	567	
8008-8510	3B..BJ60			23704-56020-	1	455	566
	23705 PIPE SUB-ASSY, INJECTION, NO.5						
8510-	2H..HJ60			23705-68010-	1	567	
	23706 PIPE SUB-ASSY, INJECTION, NO.6						
8510-	2H..HJ60			23706-68010-	1	567	
	23741 CLAMP, INJECTION PIPE, NO.1						
8510-	2H..HJ60			23741-48010-	10	567	
8008-8510	3B..BJ60			23741-56010-	4	455	566
	23742 CLAMP, INJECTION PIPE, NO.2						
8510-	2H..HJ60			23742-46010-	2	567	
	23743 CLAMP, INJECTION PIPE NO.3						
8510-	2H..HJ60			23741-46010-	2	567	
	23841A CLAMP, FUEL PIPE, NO.1 (FOR INJECTION PUMP)						
8510-	2H..HJ60			23841-56010-	1	567	
	23842C CLAMP, FUEL PIPE, NO.2 (FOR INJECTION PUMP)						
8510-	2H..HJ60			23842-56010-	1	567	

FIG.22-03 INJECTION PUMP BODY

MR4-11-0405

(8008-8510)3B

(8510-)2H

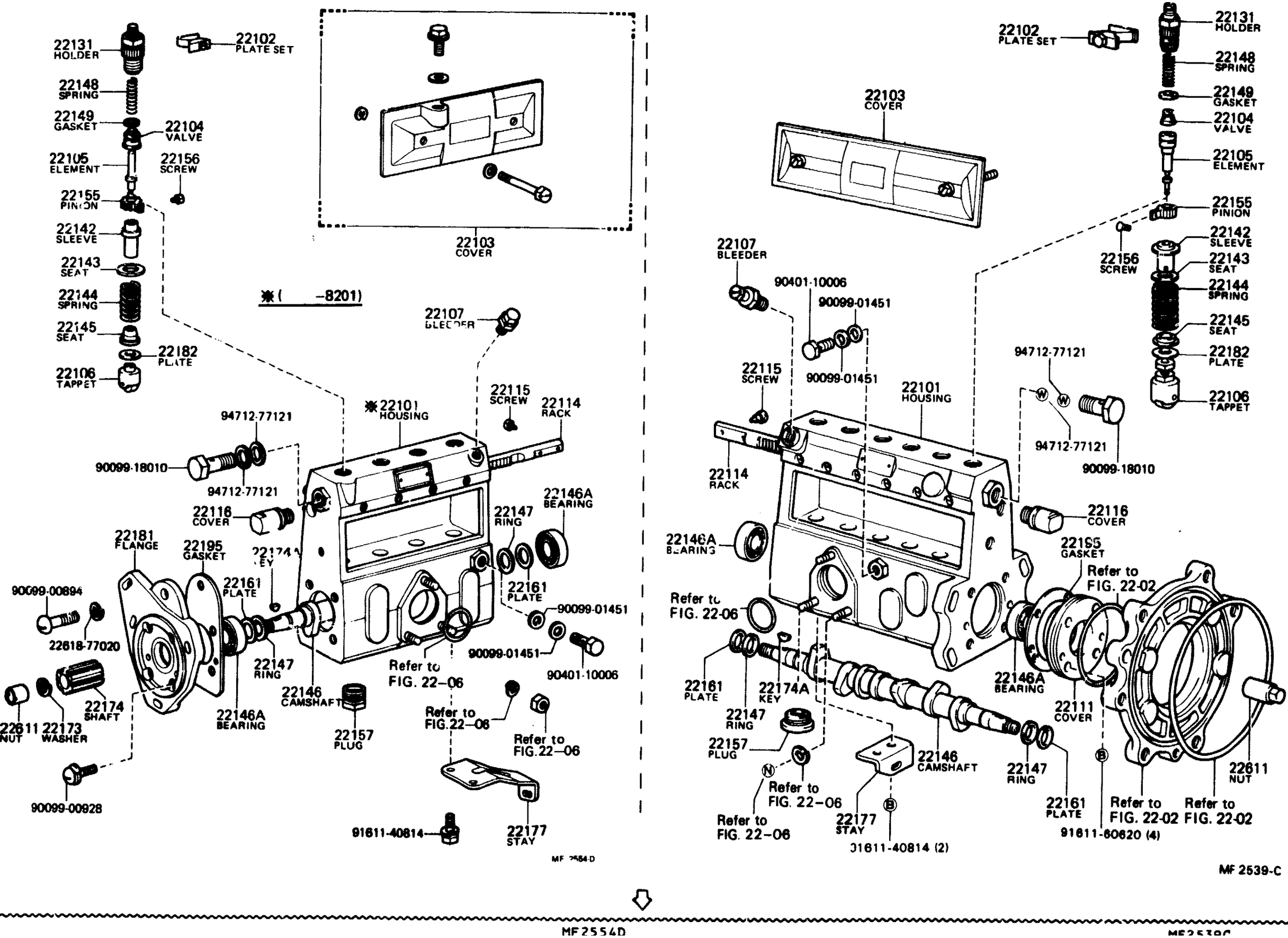

PROD.DATE	MODELS	DESCRIPTION	R/P	PART NUMBER	QTY	REV.REF.CODE FROM	REV.REF.CODE UP TO
FIG.	22-03 INJECTION PUMP BODY						
	22101 HOUSING SUB-ASSY, INJECTION PUMP						
8510-	2H..HJ60..ATM			22190-68110-	1	567	
8510-	2H..HJ60..MTM			22190-68010-	1	567	
8008-8201	3B..BJ60			22190-56042-	1	455	
	22102 PLATE SET, VALVE HOLDER LOCK						
8008-	3B,2H..BJ60,HJ60			22102-77021-	3	455	
	22103 COVER SUB-ASSY, INJECTION PUMP						
8510-	2H..HJ60			22103-77130-	1	567	
8008-8510	3B..BJ60			22103-48030-	1	455	566
	22104 VALVE SUB-ASSY, INJECTION PUMP DELIVERY						
8510-	2H..HJ60..ATM			22104-68110-	6	567	
8008-	3B,2H..BJ60,HJ60..MTM			22104-77020-	6	455	
	22105 ELEMENT SUB-ASSY, INJECTION PUMP						
8510-	2H..HJ60..ATM			22105-68130-	6	567	
8510-	2H..HJ60..MTM			22105-68010-	6	567	
8008-8510	3B..BJ60			22105-58010-	4	455	566
	22106 TAPPET SUB-ASSY, INJECTION PUMP						
8008-	3B,2H..BJ60,HJ60			22106-46010-	6	455	
	22107 BLEEDER SUB-ASSY, AIR						
8008-	3B,2H..BJ60,HJ60			22150-67010-	1	455	
	22111 COVER, INJECTION PUMP CAMSHAFT BEARING						
8510-	2H..HJ60			22111-68010-	1	567	
	22114 RACK, CONTROL						
8510-	2H..HJ60..ATM			22114-47010-	1	567	
8510-	2H..HJ60..MTM			22114-77130-	1	567	
8008-8510	3B..BJ60			22114-48030-	1	455	566
	22115 SCREW, RACK GUIDE						
8008-	3B,2H..BJ60,HJ60			22115-77020-	1	455	
	22116 COVER, CONTROL RACK						
8510-	2H..HJ60..ATM			22116-68110-	1	567	
8008-	3B,2H..BJ60,HJ60..MTM			22116-46010-	1	455	
	22131 HOLDER, DELIVERY VALVE						
8008-	3B,2H..BJ60,HJ60			22131-77020-	6	455	
	22142 SLEEVE, PLUNGER CONTROL						
8008-	3B,2H..BJ60,HJ60			22142-77020-	6	455	
	22143 SEAT, SPRING UPPER						
8008-	3B,2H..BJ60,HJ60			22143-77020-	6	455	
	22144 SPRING, PUMP PLUNGER						
8008-	3B,2H..BJ60,HJ60			22144-46010-	6	455	
	22145 SEAT, SPRING, LOWER						
8008-	3B,2H..BJ60,HJ60			22145-46010-	6	455	
	22146 CAMSHAFT, INJECTION PUMP						
8510-	2H..HJ60			22146-68010-	1	567	
8008-8510	3B..BJ60			22146-56010-	1	455	566
	22146A BEARING (FOR INJECTION CAMSHAFT)						
8008-	3B,2H..BJ60,HJ60			90099-10087-	2	455	
	22147 RING, CAMSHAFT ADJUST						
8008-	3B,2H..BJ60,HJ60			22147-77020-	2	455	
	22148 SPRING, DELIVERY VALVE						
8510-	2H..HJ60			22148-68010-	6	567	
8008-8510	3B..BJ60			22148-46010-	4	455	566

PROD.DATE	MODELS	DESCRIPTION	R/P	PART NUMBER	QTY	REV.REF.CODE FROM	REV.REF.CODE UP TO
	22149 GASKET, DELIVERY VALVE						
8008-	3B,2H..BJ60,HJ60			22149-76010-	6	455	
	22155 PINION, PLUNGER CONTROL						
8008-	3B,2H..BJ60,HJ60			22155-76010-	6	455	
	22156 SCREW, PLUNGER CONTROL PINION CLAMP						
8008-	3B,2H..BJ60,HJ60			22156-76010-	6	455	
	22157 PLUG, INJECTION PUMP FELT PLATE						
8008-	3B,2H..BJ60,HJ60			22157-48023-	6	455	
	22161 PLATE, CAMSHAFT SHIM						
8008-	3B,2H..BJ60,HJ60	T=0.10		22161-76010-	2	455	
8008-	3B,2H..BJ60,HJ60	T=0.12		22162-76010-	2	455	
8008-	3B,2H..BJ60,HJ60	T=0.14		22163-76010-	2	455	
8008-	3B,2H..BJ60,HJ60	T=0.16		22164-76010-	2	455	
8008-	3B,2H..BJ60,HJ60	T=0.18		22165-76010-	2	455	
8008-	3B,2H..BJ60,HJ60	T=0.50		22166-76010-	2	455	
	22173 WASHER, SPRING						
8008-8510	3B..BJ60			22173-46010-	1	455	566
	22174 SHAFT, SPRAIN						
8008-8510	3B..BJ60			22174-47010-	1	455	566
	22174A KEY (FOR SPRAIN SHAFT)						
8510-	2H..HJ60			90099-13020-	1	567	
8008-8510	3B..BJ60			90099-13002-	1	455	566
	22177 STAY, INJECTION PUMP BODY						
8510-	2H..HJ60			22177-68010-	1	567	
8008-8201	3B..BJ60			22177-56041-	1	455	476
8201-8510	3B..BJ60			22177-56042-	1	477	566
	22181 FLANGE, INJECTION PUMP						
8008-8510	3B..BJ60			22181-56040-	1	455	566

PROD.DATE	MODELS	DESCRIPTION	R/P	PART NUMBER	QTY	REV.REF.CODE FROM	REV.REF.CODE UP TO
	22182 PLATE, TAPPET ADJUSTING SHIM						
8008-	3B,2H..BJ60,HJ60	T=0.10		22182-46010-	6	455	
8008-	3B,2H..BJ60,HJ60	T=0.20		22183-46010-	6	455	
8008-	3B,2H..BJ60,HJ60	T=0.30		22184-46010-	6	455	
8008-	3B,2H..BJ60,HJ60	T=0.40		22185-46010-	6	455	
8008-	3B,2H..BJ60,HJ60	T=0.50		22186-46010-	6	455	
8008-	3B,2H..BJ60,HJ60	T=0.15		22186-48010-	6	455	
8008-	3B,2H..BJ60,HJ60	T=0.60		22187-46010-	6	455	
8008-	3B,2H..BJ60,HJ60	T=0.70		22188-46010-	6	455	
8008-	3B,2H..BJ60,HJ60	T=0.80		22189-46010-	6	455	
8008-	3B,2H..BJ60,HJ60	T=0.90		22189-48031-	6	455	
8008-	3B,2H..BJ60,HJ60	T=1.00		22189-48032-	6	455	
8008-	3B,2H..BJ60,HJ60	T=1.10		22189-48033-	6	455	
8008-	3B,2H..BJ60,HJ60	T=1.20		22189-48034-	6	455	
8008-	3B,2H..BJ60,HJ60	T=1.30		22189-48035-	6	455	
8008-	3B,2H..BJ60,HJ60	T=1.40		22189-48036-	6	455	
	22195 GASKET, BEARING COVER						
8510-	2H..HJ60			22195-68010-	1	567	
8008-8510	3B..BJ60			22195-48030-	1	455	566
	22611 NUT, TIMER ROUND						
8510-	2H..HJ60			22611-68010-	1	567	
8008-8510	3B..BJ60			22611-46010-	1	455	566

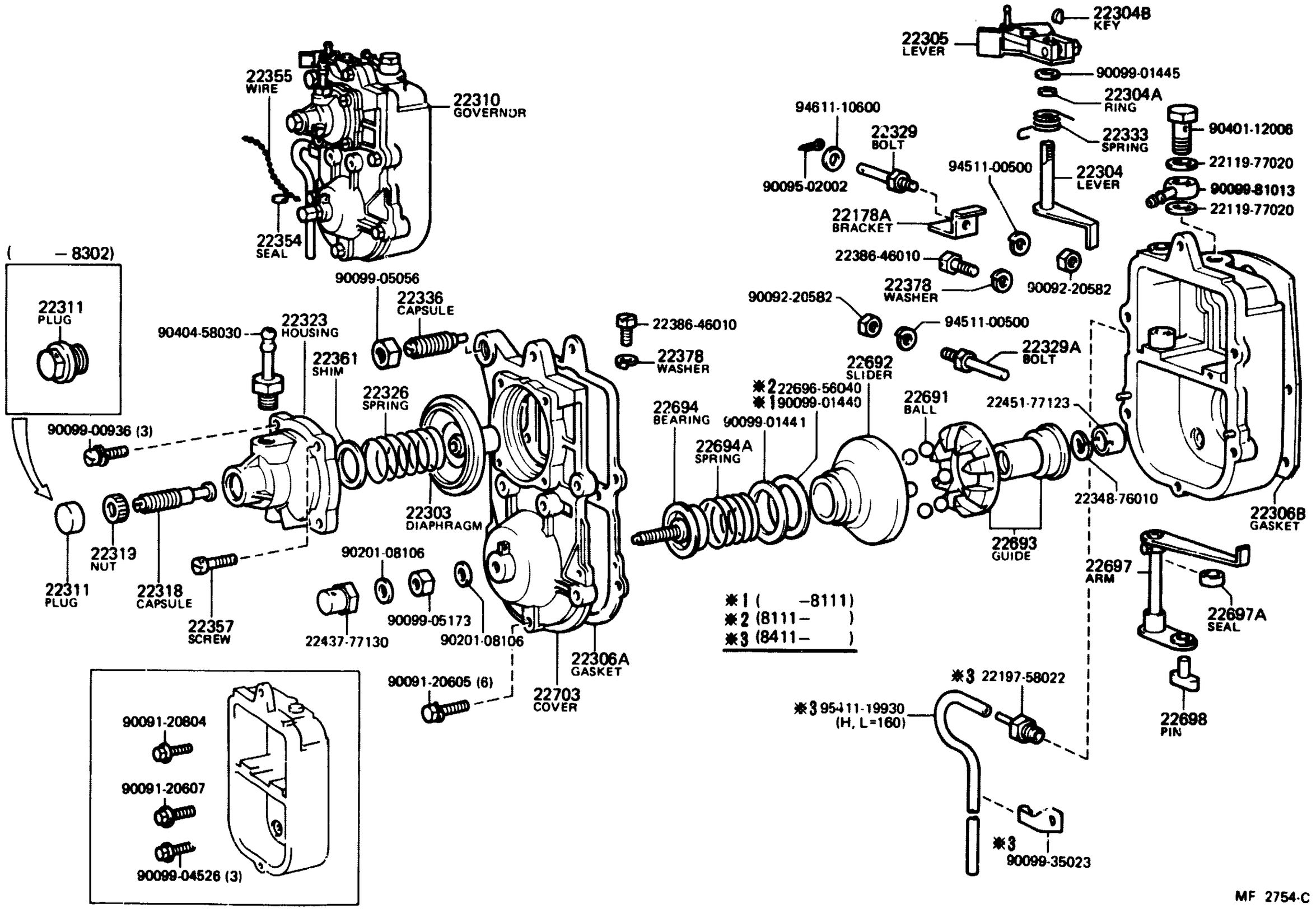
22355
WIRE
22310
GOVERNOR
22354
SEAL
(-8302)
22311
PLUG
90099-00936 (3)
22319
NUT
22318
CAPSULE
22311
PLUG
22357
SCREW
90099-05056
22336
CAPSULE
90404-58030
22323
HOUSING
22361
SHIM
22326
SPRING
22303
DIAPHRAGM
90201-08106
90099-05173
22437-77130
90201-08106
90091-20605 (6)
22703
COVER
22306A
GASKET
22386-46010
22378
WASHER
22694
BEARING
22694A
SPRING
90099-01441
✱2 22696-56040
✱1 90099-01440
22692
SLIDER
22691
BALL
22693
GUIDE
22451-77123
22348-76010
22306B
GASKET
22305
LEVER
22304B
KEY
90099-01445
22304A
RING
22333
SPRING
94611-10600
90095-02002
22329
BOLT
22178A
BRACKET
94511-00500
22304
LEVER
90401-12006
22119-77020
90099-81013
22119-77020
22386-46010
22378
WASHER
90092-20582
90092-20582
94511-00500
22329A
BOLT
22697
ARM
22697A
SEAL
22698
PIN
✱3 22197-58022
✱3 95411-19930
(H, L=160)
✱3
90099-35023
✱1 (-8111)
✱2 (8111-)
✱3 (8411-)
90091-20804
90091-20607
90099-04526 (3)

MF 2754-C

(8510-)2H..MTM

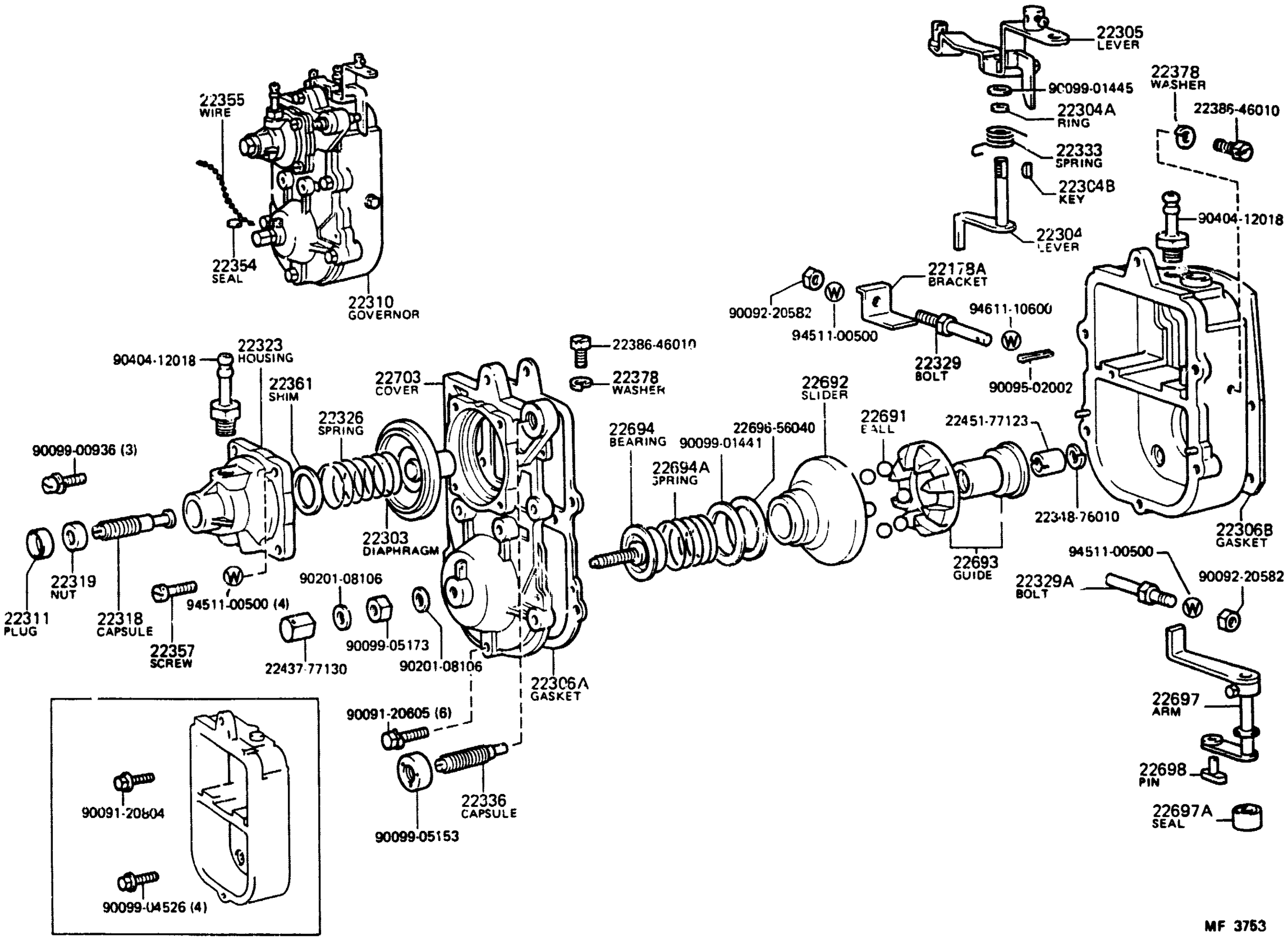
22355
WIRE
22354
SEAL
22310
GOVERNOR
22305
LEVER
90099-01445
22304A
RING
22333
SPRING
22304B
KEY
22304
LEVER
22378
WASHER
22386-46010
90404-12018
22178A
BRACKET
90092-20582
94511-00500
94611-10600
22329
BOLT
90095-02002
22692
SLIDER
22691
BALL
22451-77123
22694
BEARING
22694A
SPRING
90099-01441
22696-56040
22318-76010
22306B
GASKET
22693
GUIDE
94511-00500
90092-20582
22329A
BOLT
22697
ARM
22698
PIN
22697A
SEAL
90404-12018
22323
HOUSING
22361
SHIM
22326
SPRING
22703
COVER
22386-46010
22378
WASHER
90099-00936 (3)
22303
DIAPHRAGM
22319
NUT
22311
PLUG
22318
CAPSULE
22357
SCREW
94511-00500 (4)
90201-08106
90099-05173
22437-77130
90201-08106
22306A
GASKET
90091-20605 (6)
22336
CAPSULE
90099-05153
90091-20604
90099-04526 (4)
MF 3753

PROD.DATE	MODELS	DESCRIPTION	R/P	PART NUMBER	QTY	REV.REF.CODE FROM	REV.REF.CODE UP TO
FIG.	22-04 PNEUMATIC GOVERNOR						
	22178A	BRACKET, DIAPHRAGM CONNECTING					
8510-	2H..HJ60..MTM			22178-48024-	1	567	
8008-8510	3B..BJ60			22178-56011-	1	455	566
	22303	DIAPHRAGM SUB-ASSY, GOVERNOR					
8008-	3B,2H..BJ60,HJ60..MT M			22303-47010-	1	455	
	22304	LEVER SUB-ASSY, INJECTION PUMP, NO.3					
8008-	3B,2H..BJ60,HJ60..MT M			22408-68010-	1	455	
	22304A	RING, O (FOR NO.3 LEVER)					
8008-	3B,2H..BJ60,HJ60..MT M			# 96710-01008- (96711-19008-)	1	455	
	22304B	KEY (FOR NO.3 LEVER)					
8008-	3B,2H..BJ60,HJ60..MT M			90099-13001-	1	455	
	22305	LEVER SUB-ASSY, INJECTION PUMP, NO.1					
8510-	2H..HJ60..MTM			22308-68020-	1	567	
8008-8510	3B..BJ60			22308-56041-	1	455	566
	22306A	GASKET (FOR GOVERNOR HOUSING)					
8008-	3B,2H..BJ60,HJ60..MT M			22442-77130-	1	455	
	22306B	GASKET (FOR INJECTION PUMP HOUSING)					
8008-	3B,2H..BJ60,HJ60..MT M			22442-77131-	1	455	
	22310	GOVERNOR ASSY, INJECTION PUMP					
8510-	2H..HJ60..MTM			22320-68020-	1	567	
8008-8411	3B..BJ60			22320-58010-	1	455	514
8411-8510	3B..BJ60			22320-58022-	1	515	566
	22311	PLUG, DIAPHRAGM HOUSING SEALING SCREW					
8008-8302	3B..BJ60			22311-77130-	1	455	
	22311 CONTINUED	PLUG, DIAPHRAGM HOUSING SEALING SCREW					
8302-	3B,2H..BJ60,HJ60..MT M			22457-58010-	1		
	22318	CAPSULE, IDLING					
8008-	3B,2H..BJ60,HJ60..MT M			22318-48030-	1	455	
	22319	NUT, GOVERNOR IDLING SPRING SET					
8008-	3B,2H..BJ60,HJ60..MT M			22319-77010-	1	455	
	22323	HOUSING, GOVERNOR DIAPHRAGM					
8008-8302	3B..BJ60			22323-77010-	1	455	
8302-	3B,2H..BJ60,HJ60..MT M			22323-58010-	1		
	22326	SPRING, GOVERNOR MAIN					
8510-	2H..HJ60..MTM			22326-48030-	1	567	
8008-8510	3B..BJ60			22326-58010-	1	455	566
	22329	BOLT, DIAPHRAGM CONNECTING					
8008-	3B,2H..BJ60,HJ60..MT M			22329-77021-	1	455	
	22329A	BOLT, DIAPHRAGM CONNECTING, NO.2					
8008-	3B,2H..BJ60,HJ60..MT M			22329-77130-	1	455	
	22333	SPRING, DIAPHRAGM STOP LEVER RETURN					
8510-	2H..HJ60..MTM			22333-77130-	1	567	
8008-8510	3B..BJ60			22333-56040-	1	455	566
	22336	CAPSULE, FULL STOP					
8008-8411	3B..BJ60			# 22336-46010- (22336-68010-)	1	455	514
8411-	3B,2H..BJ60,HJ60..MT M			22336-68010-	1	515	

PROD.DATE	MODELS	DESCRIPTION	R/P	PART NUMBER	QTY	REV.REF.CODE FROM	REV.REF.CODE UP TO
	22354 SEAL, LEAD						
8008-	3B,2H..BJ60,HJ60..MT M			22354-77050-	3	455	
	22355 WIRE, GOVERNOR HOUSING SEAL						
8008-	3B,2H..BJ60,HJ60..MT M			22355-36010-	3	455	
	22357 SCREW, DIAPHRAGM HOUSING SET						
8003-	3B,2H..BJ60,HJ60..MT M			90099-04945-	1	455	
	22361 SHIM, MAIN SPRING						
8008-	3B,2H..BJ60,HJ60..MT M	T=3.0		22361-76010-	2	455	
8008-	3B,2H..BJ60,HJ60..MT M	T=2.0		22362-76010-	2	455	
8008-	3B,2H..BJ60,HJ60..MT M	T=1.0		22363-76010-	2	455	
8008-	3B,2H..BJ60,HJ60..MT M	T=0.5		22364-76010-	2	455	
	22378 WASHER, DRAIN SCREW						
8510-	2H..HJ60..MTM			22113-77090-	2	567	
8008-8510	3B..BJ60		#	22378-76010- (22113-77090-)	2	455	566
	22691 BALL, SPEED CONTROL						
8008-	3B,2H..BJ60,HJ60..MT M			90099-12010-	6	455	
	22692 SLIDER (FOR SPEED CONTROL)						
8510-	2H..HJ60..MTM			22692-77131-	1	567	
8008-8111	3B..BJ60			22692-56040-	1	455	
8111-8510	3B..BJ60			22692-56041-	1		566
	22693 GUIDE BALL						
8008-	3B,2H..BJ60,HJ60..MT M			22693-77130-	1	455	

PROD.DATE	MODELS	DESCRIPTION	R/P	PART NUMBER	QTY	REV.REF.CODE FROM	REV.REF.CODE UP TO
	22694 BEARING SUB-ASSY						
8008-	3B,2H..BJ60,HJ60..MT M			22694-77130-	1	455	
	22694A SPRING, SPEED CONTROL						
8008-	3B,2H..BJ60,HJ60..MT M			22449-48030-	1	455	
	22697 ARM SUB-ASSY						
8510-	2H..HJ60..MTM			22697-77131-	1	567	
8008-8111	3B..BJ60			22697-56040-	1	455	
8111-8510	3B..BJ60			22697-56041-	1		566
	22697A SEAL, OIL (FOR NO.3 LEVER)						
8008-	3B,2H..BJ60,HJ60..MT M			85613-31010-	1	455	
	22698 PIN, SHIFTING						
8008-8111	3B..BJ60			22698-77130-	1	455	
8111-	3B,2H..BJ60,HJ60..MT M			22698-77131-	1		
	22703 COVER, GOVERNOR						
8510-	2H..HJ60..MTM			22703-68010-	1	567	
8008-8510	3B..BJ60			22703-56040-	1	455	566

FIG.22-05 MECHANICAL GOVERNOR

1-B10

MR4-11-0408

(8510-)2H..ATM

ILLUST.NO. 10F2

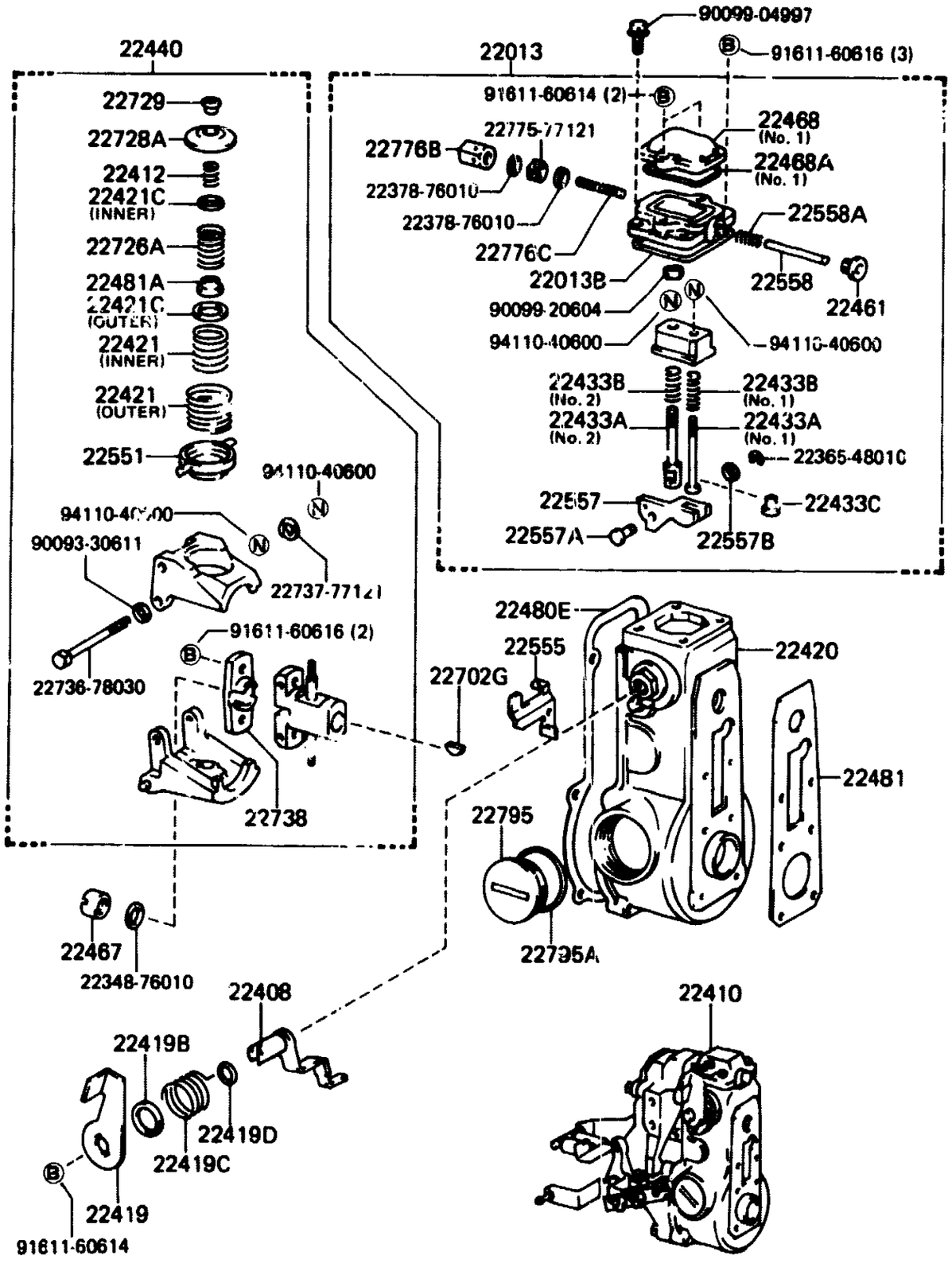

MF 3531

(8510-)2H..ATM

ILLUST.NO. 20F2

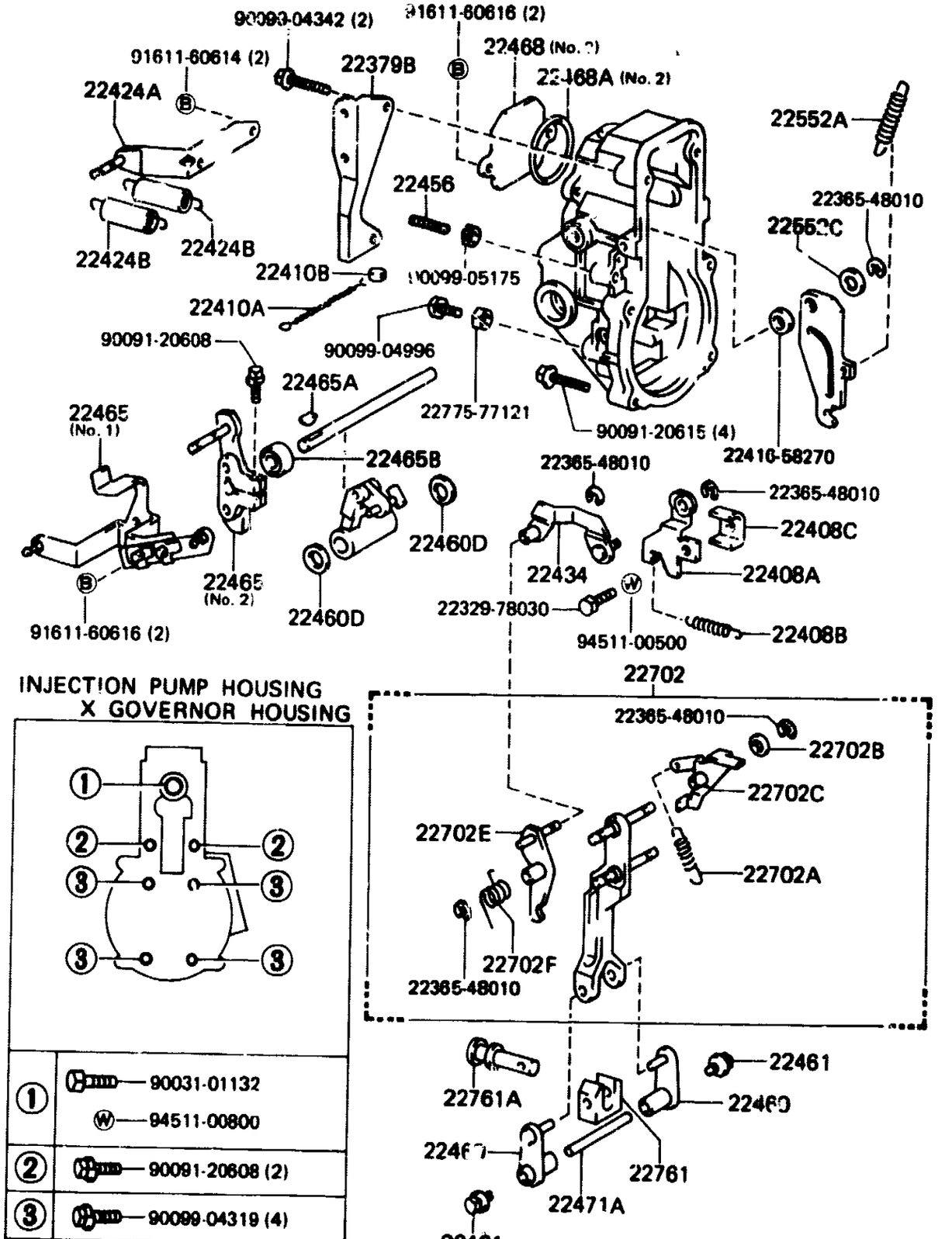

INJECTION PUMP HOUSING
X GOVERNOR HOUSING

①	90031-01132
	Ⓦ 94511-00800
②	90091-20608 (2)
③	90099-04319 (4)

MF 3587

GENUINE TOYOTA PARTS

PROD.DATE	MODELS	DESCRIPTION	R/P	PART NUMBER	QTY	REV.REF.CODE FROM	REV.REF.CODE UP TO
FIG.	22-05 MECHANICAL GOVERNOR						
	22013 HOUSING SUB-ASSY, FULLROAD STOPPER						
8510-	2H..HJ60..ATM			22013-68110-	1	567	
	22013B RING, O (FOR FULLROAD STOPPER HOUSING)						
8510-	2H..HJ60..ATM			90099-14039-	1	567	
	22379B BRACKET, STOP WIRE						
8510-	2H..HJ60..ATM			22379-68110-	1	567	
	22408 ARM, STOPPER						
8510-	2H..HJ60..ATM			22408-68110-	1	567	
	22408A ARM SUB-ASSY (FOR CONTROL LACK)						
8510-	2H..HJ60..ATM			22408-68120-	1	567	
	22408B SPRING, RETURN (FOR ARM)						
8510-	2H..HJ60..ATM			22432-78030-	1	567	
	22408C NUT, ARM						
8510-	2H..HJ60..ATM			22428-78030-	1	567	
	22410 GOVERNOR ASSY, INJECTION PUMP MECHANICAL						
8510-	2H..HJ60..ATM			22410-68110-	1	567	
	22410A WIRE, GOVERNOR HOUSING SEAL						
8510-	2H..HJ60..ATM			22353-36010-	2	567	
	22410B SEAL, LEAD						
8510-	2H..HJ60..ATM			22354-77010-	2	567	
	22412 SPRING, MECHANICAL GOVERNOR						
8510-	2H..HJ60..ATM			22412-78030-	2	567	
	22419 LEVER, STOP						
8510-	2H..HJ60..ATM			22419-58230-	1	567	
	22419B WASHER, PLATE (FOR STOPPER LEVER)						
8510-	2H..HJ60..ATM	T=0.5		90099-01521-	1	567	
8510-	2H..HJ60..ATM	T=0.1		90099-02315-	1	567	
8510-	2H..HJ60..ATM	T=0.2	#	90099-02316- (90099-01369-)	1	567	
	22419C SPRING, RETURN (FOR STOPPER LEVER)						
8510-	2H..HJ60..ATM			22432-68110-	1	567	
	22419D RING, O (FOR STOPPER LEVER)						
8510-	2H..HJ60..ATM			90099-14005-	1	567	
	22420 HOUSING SUB-ASSY, MECHANICAL GOVERNOR						
8510-	2H..HJ60..ATM			22017-68110-	1	567	
	22421 SPRING, IDLING						
8510-	2H..HJ60..ATM	INNER		22768-68110-	2	567	
8510-	2H..HJ60..ATM	OUTER		22768-78031-	2	567	
	22421C WASHER, IDLING SPRING						
8510-	2H..HJ60..ATM	OUTER,T=0.2		22737-78030-	2	567	
8510-	2H..HJ60..ATM	OUTER,T=0.4		22737-78031-	2	567	
8510-	2H..HJ60..ATM	OUTER,T=0.6		22737-78032-	2	567	
8510-	2H..HJ60..ATM	INNER,T=0.4		22737- 8033-	2	567	
8510-	2H..HJ60..ATM	INNER,T=0.6		22737-78034-	2	567	
8510-	2H..HJ60..ATM	OUTER,T=0.5		22737-78035-	2	567	
8510-	2H..HJ60..ATM	INNER,T=0.55		22737-78036-	2	567	
	22424A ARM, SPRING						
8510-	2H..HJ60..ATM			22424-68110-	1	567	
	22424B SPRING, RETURN (FOR SPRING ARM)						
8510-	2H..HJ60..ATM			22440-68110-	2	567	

PROD.DATE	MODELS	DESCRIPTION	R/P	PART NUMBER	QTY	REV.REF.CODE FROM	REV.REF.CODE UP TO
	22433A SCREW, ADAPTER (FOR SLIDING BLOCK)						
8510-	2H..HJ60..ATM	NO.1		22433-78031-	1	567	
8510-	2H..HJ60..ATM	NO.2		22433-78032-	1	567	
	22433B SPRING (FOR ADAPTER SCREW)						
8510-	2H..HJ60..ATM	NO.1		22411-78030-	1	567	
8510-	2H..HJ60..ATM	NO.2		22411-78032-	1	567	
	22433C BUSH (FOR ADAPTER SCREW)						
8510-	2H..HJ60..ATM			22554-78030-	1	567	
	22434 SHACKLE						
8510-	2H..HJ60..ATM			22016-68110-	1	567	
	22440 FLYWEIGHT SUB-ASSY						
8510-	2H..HJ60..ATM			22720-68110-	1	567	
	22456 SCREW, STOP						
8510-	2H..HJ60..ATM			22776-78032-	1	567	
	22460 LEVER SUB-ASSY, SUPPORT						
8510-	2H..HJ60..ATM			22011-78030-	2	567	
	22460D WASHER, LOCK (FOR STEERING LEVER)						
8510-	2H..HJ60..ATM	T=0.75		22416-78030-	2	567	
8510-	2H..HJ60..ATM	T=0.80		22416-78031-	2	567	
8510-	2H..HJ60..ATM	T=0.50		22737-78035-	2	567	
8510-	2H..HJ60..ATM	T=0.55		22737-78036-	2	567	
8510-	2H..HJ60..ATM	T=0.60		22737-78037-	2	567	
8510-	2H..HJ60..ATM	T=0.65		22737-78038-	2	567	
8510-	2H..HJ60..ATM	T=0.70		22737-78039-	2	567	
	22461 PLUG, SCREW						
8510-	2H..HJ60..ATM	FULL ROAD STOPPER HOUSING		22129-78030-	1	567	
8510-	2H..HJ60..ATM	GOVERNOR COVER		22446-78030-	2	567	

PROD.DATE	MODELS	DESCRIPTION	R/P	PART NUMBER	QTY	REV.REF.CODE FROM	REV.REF.CODE UP TO
	22465 LEVER SUB-ASSY, ADJUSTING						
8510-	2H..HJ60..ATM	NO.2		22701-68110-	1	567	
8510-	2H..HJ60..ATM	NO.1		22701-68120-	1	567	
	22465A KEY, WOODRUFF (FOR ADJUSTING LEVER)						
8510-	2H..HJ60..ATM			90099-13013-	1	567	
	22465B SEAL, OIL (FOR ADJUSTING LEVER)						
8510-	2H..HJ60..ATM			90099-15022-	1	567	
	22467 NUT, ROUND						
8510-	2H..HJ60..ATM			22451-77123-	1	567	
	22468 COVER, PLATE						
8510-	2H..HJ60..ATM	NO.2		22458-78030-	1	567	
8510-	2H..HJ60..ATM	NO.1		22458-78031-	1	567	
	22468A O, RING						
8510-	2H..HJ60..ATM	NO.1		90099-14068-	1	567	
8510-	2H..HJ60..ATM	NO.2		90099-14069-	1	567	
	22471A SHAFT, LEVER SUPPORTING						
8510-	2H..HJ60..ATM			22558-78031-	1	567	
	22480E GASKET, GOVERNOR COVER						
8510-	2H..HJ60..ATM			22774-78030-	1	567	
	22481 GASKET						
8510-	2H..HJ60..ATM			22442-78030-	1	567	
	22481A SEAT, SPRING INNER						
8510-	2H..HJ60..ATM			22481-58230-	2	567	
	22551 SEAT, SPRING (FOR FLYWEIGHT)						
8510-	2H..HJ60..ATM			22551-78030-	2	567	
	22552A SPRING, RETURN (FOR CAM PLATE)						
8510-	2H..HJ60..ATM			22432-78031-	1	567	

PROD.DATE	MODELS	DESCRIPTION	R/P	PART NUMBER	QTY	REV.REF.CODE FROM	REV.REF.CODE UP TO
	22552C WASHER (FOR CAM PLATE BUSH)						
8510-	2H••HJ60••ATM	T=0.2		22416-78032-	1	567	
8510-	2H••HJ60••ATM	T=0.3		22416-78033-	1	567	
8510-	2H••HJ60••ATM	T=0.4		22416-78034-	1	567	
8510-	2H••HJ60••ATM	T=0.5		22416-78035-	1	567	
	22555 BRACKET, STOPPER						
8510-	2H••HJ60••ATM			22555-68110-	1	567	
	22557 CAM, FULL STOP						
8510-	2H••HJ60••ATM			22557-68110-	1	567	
	22557A PIN, CONNECTING (FOR FULLROAD STOP CAM)						
8510-	2H••HJ60••ATM			22423-78030-	1	567	
	22557B WASHER, PLATE (FOR CONNECTING PIN)						
8510-	2H••HJ60••ATM	T=0.20		90093-30610-	1	567	
8510-	2H••HJ60••ATM	T=0.05		90099-01334-	1	567	
8510-	2H••HJ60••ATM	T=0.10		90099-01505-	1	567	
	22558 SHAFT, SLIDING BLOCK						
8510-	2H••HJ60••ATM			22558-78030-	1	567	
	22558A SPRING (FOR SLIDING BLOCK SHAFT)						
8510-	2H••HJ60••ATM			22411-78031-	1	567	
	22702 LEVER ASSY, FLOATING						
8510-	2H••HJ60••ATM			22702-78030-	1	567	
	22702A SPRING, FLOATING ARM						
8510-	2H••HJ60••ATM			22432-78032-	1	567	
	22702B WASHER, PLATE (FOR FLOATING LEVER)						
8510-	2H••HJ60••ATM	T=0.05		90099-01334-	1	567	
8510-	2H••HJ60••ATM	T=0.10		90099-01505-	1	567	
8510-	2H••HJ60••ATM	T=0.40		90099-01519-	1	567	
8510-	2H••HJ60••ATM	T=0.20		90099-30610-	1	567	

PROD.DATE	MODELS	DESCRIPTION	R/P	PART NUMBER	QTY	REV.REF.CODE FROM	REV.REF.CODE UP TO
	22702C ARM, FLOATING						
8510-	2H••HJ60••ATM			22014-78030-	1	567	
	22702E LEVER SUB-ASSY, CONTROL						
8510-	2H••HJ60••ATM			22490-78030-	1	567	
	22702F SPRING, RETURN (FOR CONTROL LEVER)						
8510-	2H••HJ60••ATM			22432-78033-	1	567	
	22702G KEY, WOODRUFF (FOR FROATING LEVER)						
8510-	2H••HJ60••ATM			90099-13002-	1	567	
	22726A SPRING, SPEED CONTROL						
8510-	2H••HJ60••ATM			22726-58230-	2	567	
	22728A GUIDE, SPRING						
8510-	2H••HJ60••ATM			22728-78030-	2	567	
	22729 NUT, ADJUSTING (FOR FLYWEIGHT)						
8510-	2H••HJ60••ATM			22729-78030-	2	567	
	22738 BUSHING, GUIDE (FOR FLYWEIGHT)						
8510-	2H••HJ60••ATM			22738-78030-	1	567	
	22761 SLIDER (FOR SPEED CONTROL)						
8510-	2H••HJ60••ATM			22761-78030-	1	567	
	22761A SHAFT, SLIDING WEIGHT						
8510-	2H••HJ60••ATM	L=31.9		22752-78030-	1	567	
8510-	2H••HJ60••ATM	L=31.7		22752-78031-	1	567	
8510-	2H••HJ60••ATM	L=31.5		22752-78032-	1	567	
8510-	2H••HJ60••ATM	L=31.3		22752-78033-	1	567	
8510-	2H••HJ60••ATM	L=31.1		22752-78034-	1	567	
8510-	2H••HJ60••ATM	L=30.9		22752-78035-	1	567	
8510-	2H••HJ60••ATM	L=30.7		22752-78036-	1	567	

PROD.DATE	MODELS	DESCRIPTION	R/P	PART NUMBER	QTY	REV.REF.CODE FROM	REV.REF.CODE UP TO
	22776B NUT, CAP (FOR SCREW STOPPER)						
8510-	2H..HJ60..ATM			22437-58230-	1	567	
	22776C SCREW, STOPPER						
8510-	2H..HJ60..ATM			22776-78034-	1	567	
	22795 PLUG, SCREW						
8510-	2H..HJ60..ATM			22795-77121-	1	567	
	22795A WASHER, SCREW PLUG						
8510-	2H..HJ60..ATM			22561-78030-	1	567	

FIG.22-06 FUEL FEED PUMP

GENUINE TOYOTA PARTS

(8008-)3B,2H

※3B (8509-)

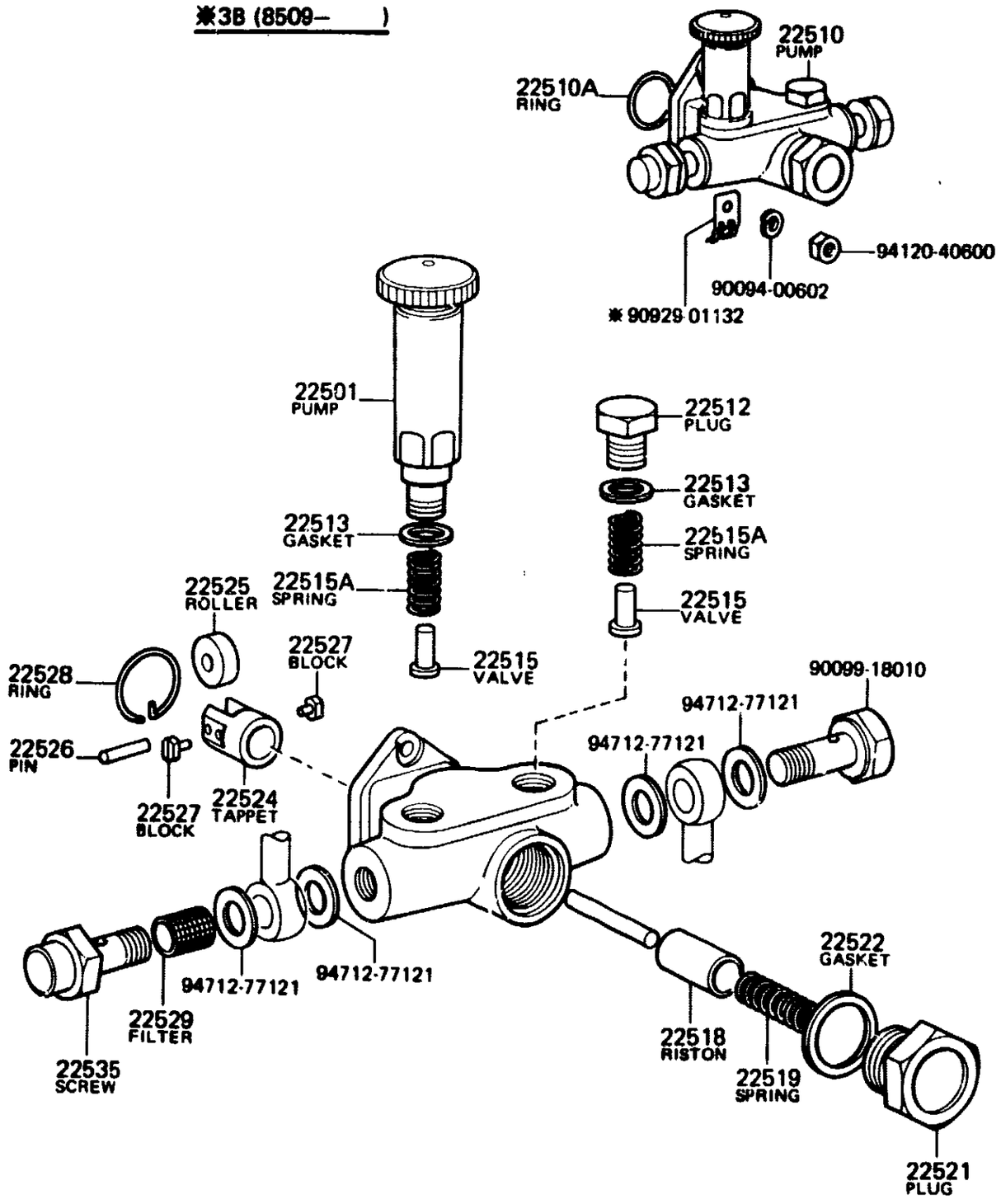

MF 2541-B

PROD.DATE	MODELS	DESCRIPTION	R/P	PART NUMBER	QTY	REV.REF.CODE FROM	REV.REF.CODE UP TO
FIG.	22-06 FUEL FEED PUMP						
	22501 PUMP SUB-ASSY, PRIMING						
8008-	3B,2H..BJ60,HJ60			22501-77021-	1	455	
	22510 PUMP ASSY, FUEL FEED						
8510-	2H..HJ60			22510-77130-	1	567	
8008-8510	3B..BJ60			22510-56040-	1	455	566
	22510A RING, O (FOR FUEL FEED PUMP)						
8008-	3B,2H..BJ60,HJ60			90099-14015-	1	455	
	22512 PLUG, FEED PUMP CHECK VALVE CHAMBER						
8008-	3B,2H..BJ60,HJ60			22512-77020-	1	455	
	22513 GASKET, CHECK VALVE CHAMBER PLUG						
8008-	3B,2H..BJ60,HJ60			22513-77020-	2	455	
	22515 VALVE, FEED PUMP CHECK						
8510-	2H..HJ60			# 22515-77020- (22515-77021-)	2	567	
8008-8510	3B..BJ60			22515-77021-	2	455	566
	22515A SPRING, FEED PUMP CHECK VALVE						
8008-	3B,2H..BJ60,HJ60			90501-05141-	2	455	
	22518 PISTON, FEED PUMP						
8008-	3B,2H..BJ60,HJ60	RED		# 22518-56010- (22518-77020-)	1	455	
8008-	3B,2H..BJ60,HJ60	YELLOW		# 22518-56011- (22518-77020-)	1	455	
8008-	3B,2H..BJ60,HJ60	GREEN		# 22518-56012- (22518-77020-)	1	455	
8008-	3B,2H..BJ60,HJ60	WHITE		# 22518-56013- (22518-77020-)	1	455	
8008-	3B,2H..BJ60,HJ60	BLUE		22518-77020-	1	455	
	22519 SPRING, FEED PUMP PISTON						
8008-	3B,2H..BJ60,HJ60			22519-48010-	1	455	

PROD.DATE	MODELS	DESCRIPTION	R/P	PART NUMBER	QTY	REV.REF.CODE FROM	REV.REF.CODE UP TO
	22521 PLUG, FEED PUMP PISTON CHAMBER						
8510-	2H••HJ60			# 22521-77020-	1	567	
				(22521-77021-)			
8008-8510	3B••BJ60			22521-77021-	1	455	566
	22522 GASKET, FEED PUMP PISTON PLUG						
8008-	3B,2H••BJ60,HJ60			# 22522-77020-	1	455	
				(90099-01432-)			
	22524 TAPPET, FEED PUMP						
8008-	3B,2H••BJ60,HJ60			22524-77021-	1	455	
	22525 ROLLER, FEED PUMP TAPPET						
8008-	3B,2H••BJ60,HJ60			22525-77020-	1	455	
	22526 PIN, FEED PUMP TAPPET ROLLER						
8008-	3B,2H••BJ60,HJ60			22526-77020-	1	455	
	22527 BLOCK, FEED PUMP TAPPET SLIDING						
8008-	3B,2H••BJ60,HJ60			22527-56010-	2	455	
	22528 RING, FEED PUMP TAPPET SNAP						
8008-	3B,2H••BJ60,HJ60			22528-77020-	1	455	
	22529 FILTER, FUEL PUMP						
8008-	3B,2H••BJ60,HJ60			22529-67010-	1	455	
	22535 SCREW, FUEL PIPE FOLLOW						
8008-	3B,2H••BJ60,HJ60			22535-46010-	1	455	

PROD.DATE	MODELS	DESCRIPTION	R/P	PART NUMBER	QTY	REV.REF.CODE FROM	REV.REF.CODE UP TO

(8008-8510)3B

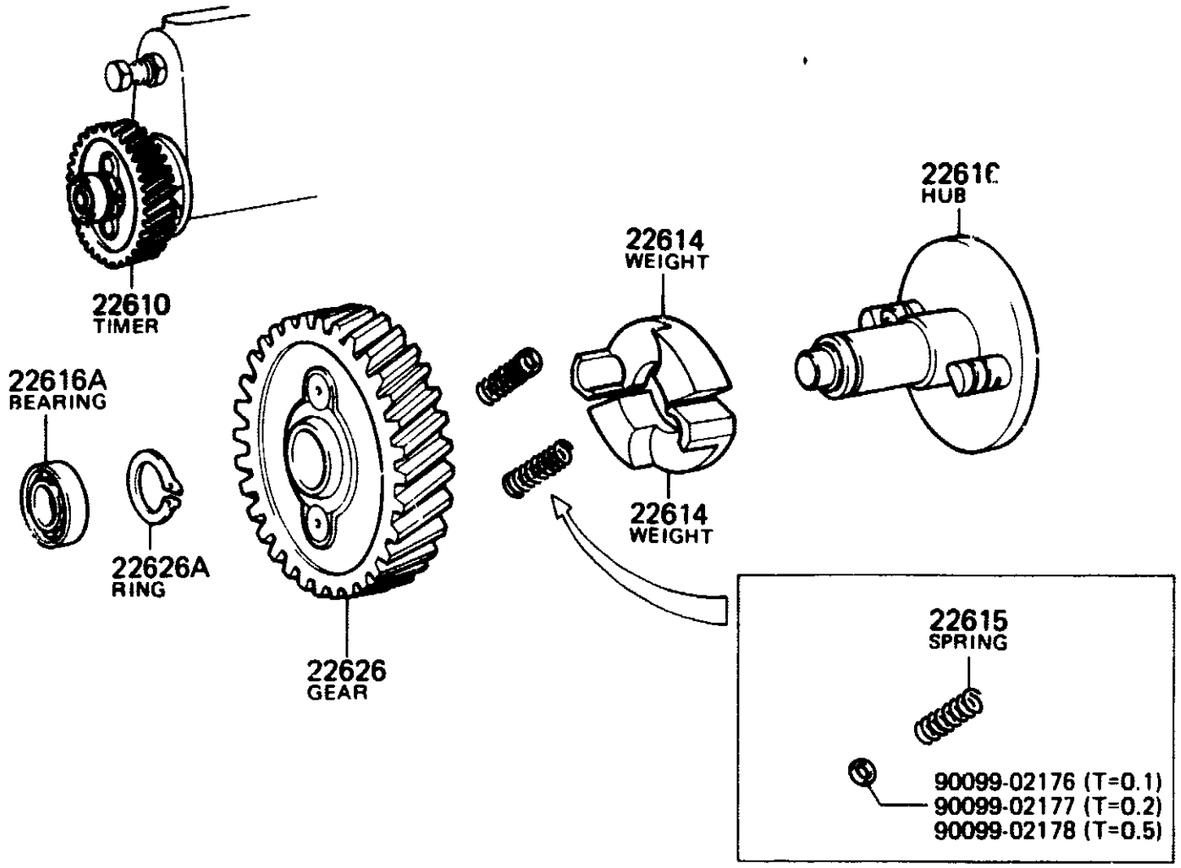

MF 2636

(8510-)2H

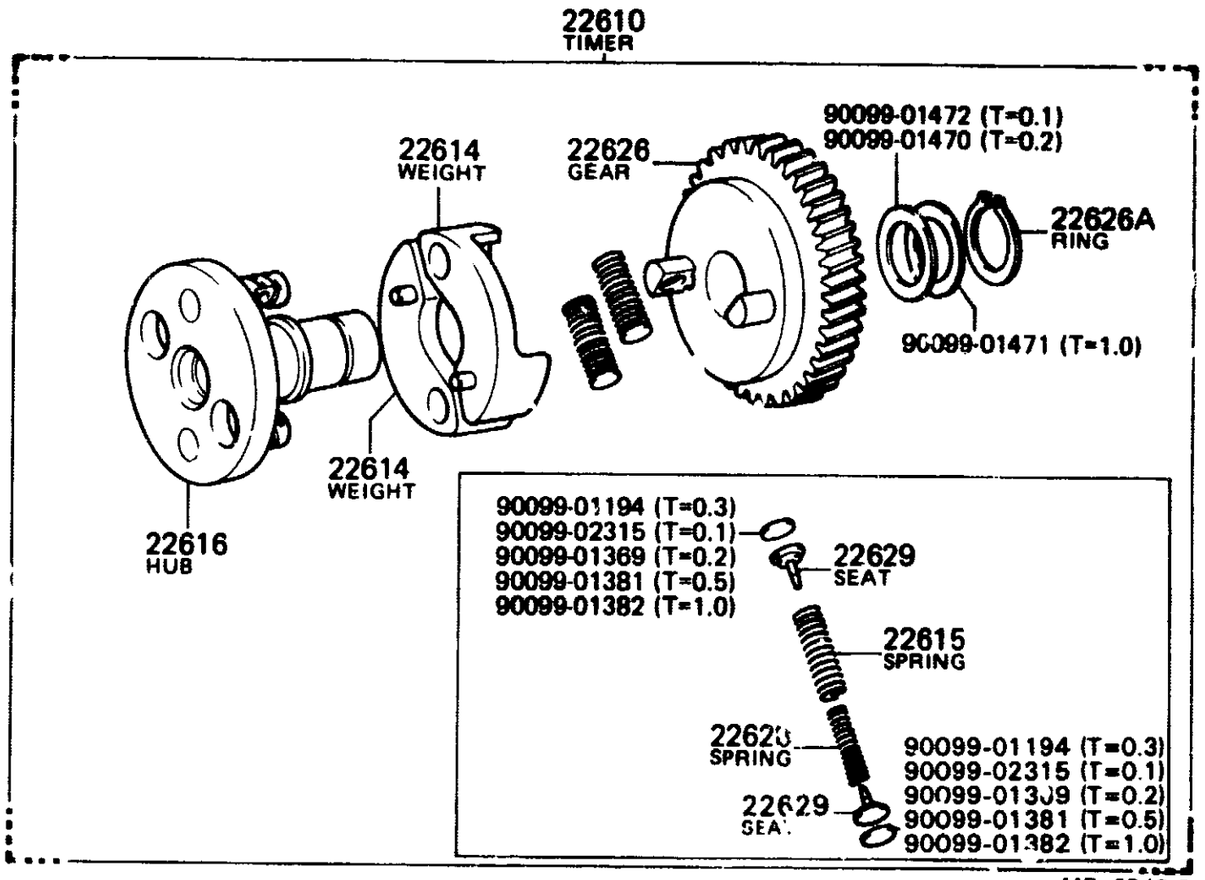

MF 2542-B

GENUINE TOYOTA PARTS

PROD.DATE	MODELS	DESCRIPTION	R/P	PART NUMBER	QTY	REV.REF.CODE FROM	REV.REF.CODE UP TO
FIG. 22-07 AUTOMATIC TIMER							
	22610 TIMER ASSY, AUTOMATIC						
8510-	2H..HJ60			22610-68011-	1	567	
8008-8409	3B..BJ60			22610-56040-	1	455	
8409-8510	3B..BJ60			22610-58010-	1		566
	22614 WEIGHT, TIMER						
8510-	2H..HJ60			22614-68010-	2	567	
8008-8510	3B..BJ60			22614-56020-	2	455	566
	22615 SPRING, TIMER						
8510-	2H..HJ60			22615-68012-	2	567	
8008-8510	3B..BJ60			22615-56040-	2	455	566
	22616 HUB, TIMER						
8510-	2H..HJ60			22616-68011-	1	567	
8008-8510	3B..BJ60			22616-56030-	1	455	566
	22616A BEARING (FOR TIMER HUB)						
8008-8510	3B..BJ60			90090-10018-	1	455	566
	22626 GEAR, DRIVE						
8510-	2H..HJ60			22626-68010-	1	567	
8008-8409	3B..BJ60			22626-56030-	1	455	
8409-8510	3B..BJ60			22626-56050-	1		566
	22626A RING, CLAMP (FOR DRIVE GEAR)						
8510-	2H..HJ60			90096-90021-	1	567	
8008-8510	3B..BJ60			90096-90001-	1	455	566
	22628 SPRING, TIMER SUB						
8510-	2H..HJ60			22628-68011-	2	567	
	22629 SEAT, SPRING (FOR TIMER SPRING)						
8510-	2H..HJ60			22629-68010-	4	567	

PROD.DATE | MODELS | DESCRIPTION | R/P | PART NUMBER | QTY | REV.REF.CODE FROM | REV.REF.CODE UP TO

'84-.3-0213

GENUINE TOYOTA PARTS

FIG.23-01 FUEL PUMP

(8008-8510)3B

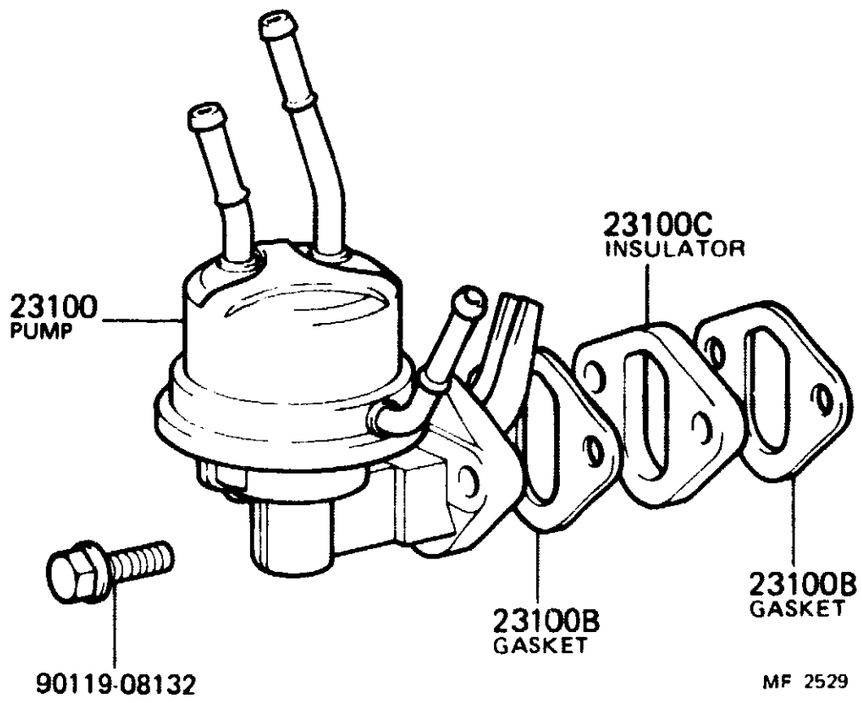

PROD.DATE	MODELS	DESCRIPTION	R/P	PART NUMBER	QTY	REV.REF.CODE FROM	REV.REF.CODE UP TO
FIG.	23-01 FUEL PUMP						
	23100	PUMP ASSY, FUEL					
8008-	2F..FJ60			23100-61070-	1	455	
	23100B	GASKET, FUEL PUMP					
8008-8410	2F..FJ60			90923-05005-	2	455	546
8410-	2F..FJ60			90923-05016-	2	547	
	23100C	INSULATOR, FUEL PUMP					
8008-8410	2F..FJ60			90923-06001-	1	455	546
8410-	2F..FJ60			90923-06008-	1	547	

(8008-)2F

(8008-8510)3B

ILLUST.NO. 10F2

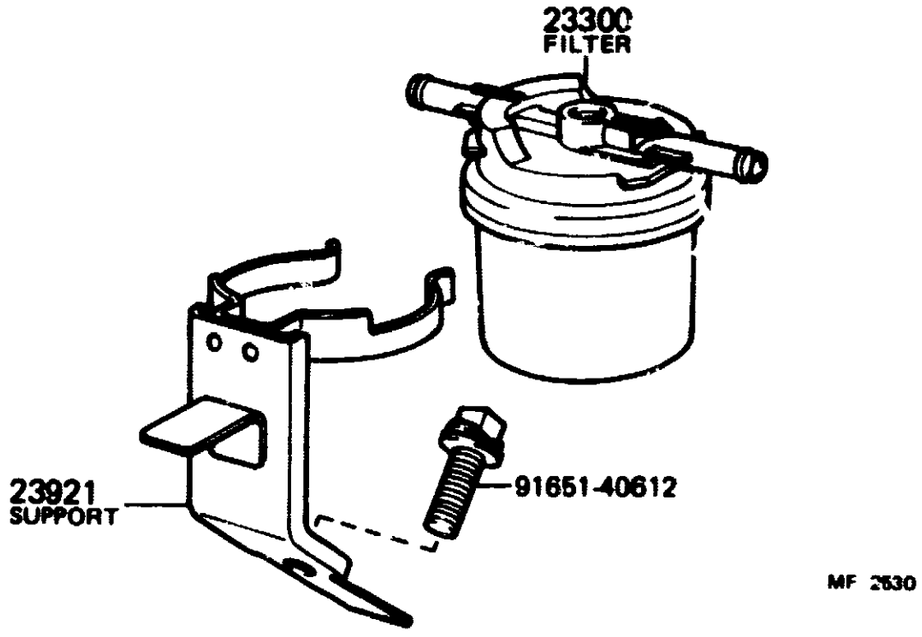

MF 2530

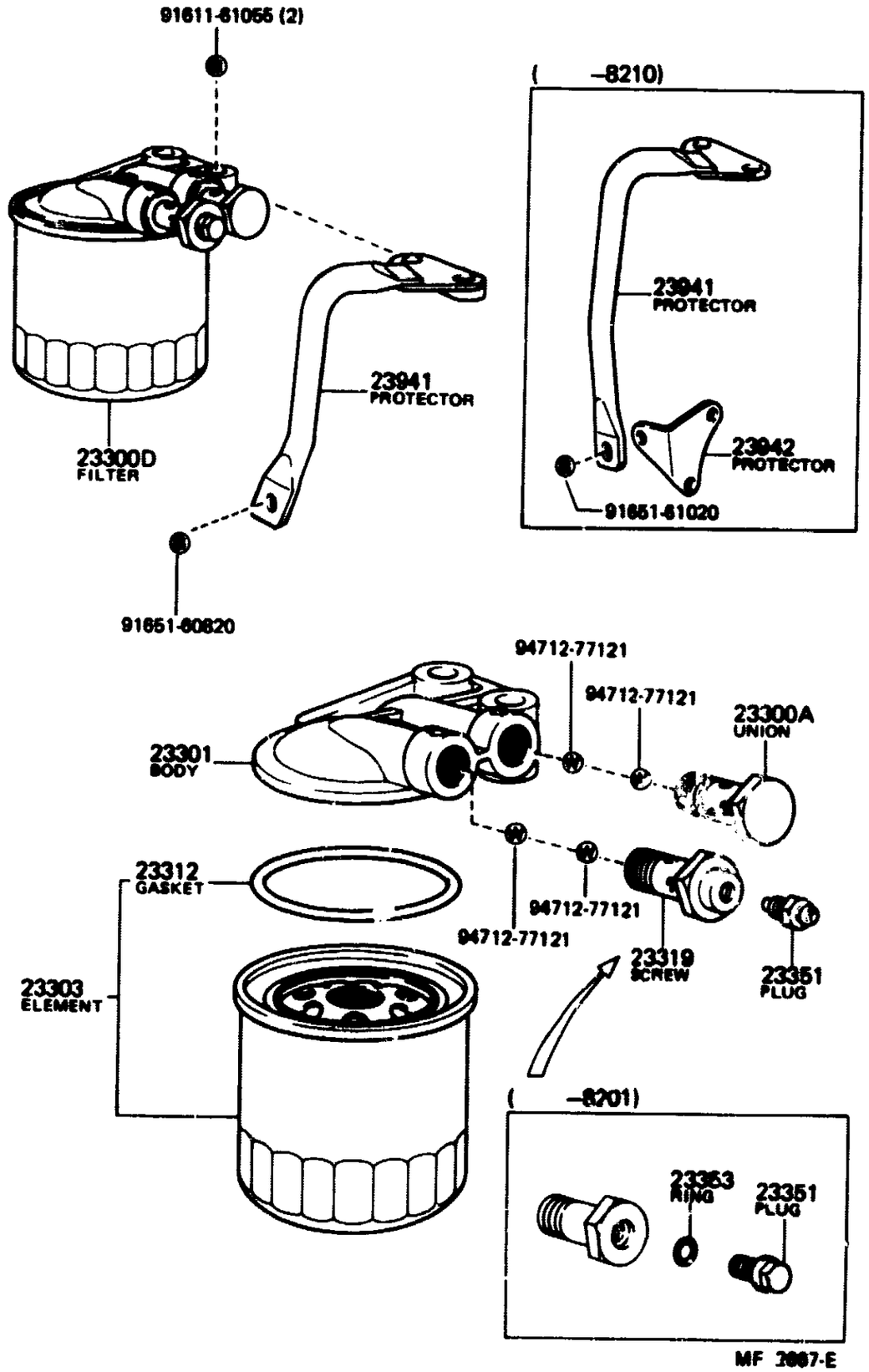

MF 3887-E

FIG.23--02 FUEL FILTER

MR4-11-0411

(8510-)2H

(8008-)3B,2H

ILLUST NO. 2OF2

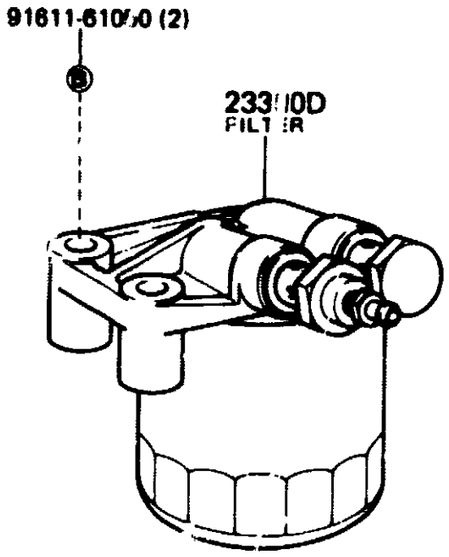

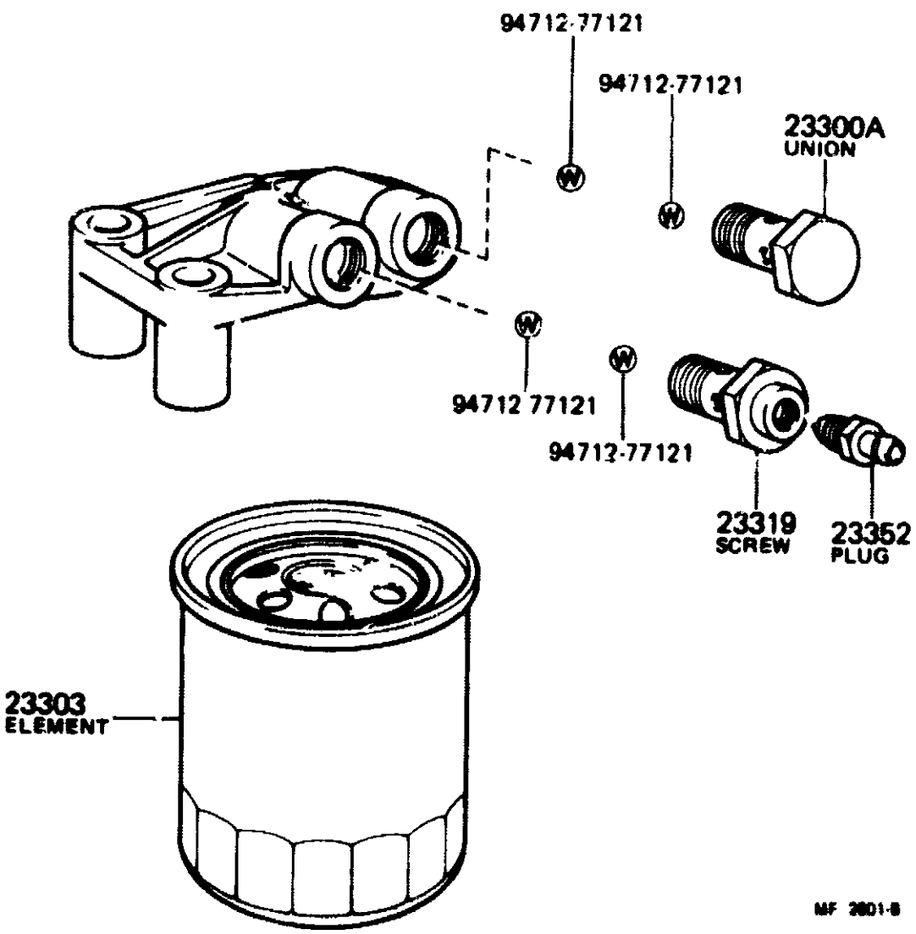

MF 2801-8

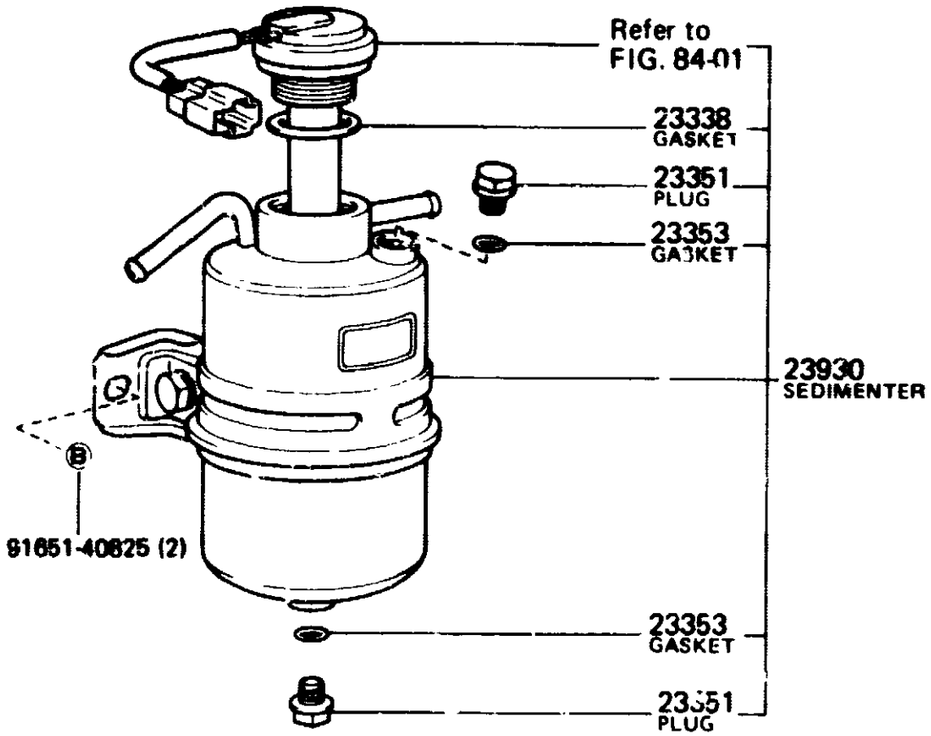

MF 2545-3

PROD.DATE	MODELS	DESCRIPTION	R/P	PART NUMBER	QTY	REV.REF.CODE FROM	REV.REF.CODE UP TO
FIG.	23-02 FUEL FILTER						
	23300 FILTER ASSY, FUEL						
8008-	2F..FJ60			23300-38010-	1	455	
	23300A UNION, NIPPLE (FOR FUEL FILTER INLET)						
C 8603-	2H..HJ60			90099-18010-	1		
C 8008-8603	3B,2H..BJ60,HJ60			90401-14060-	1	455	
	23300D FILTER ASSY, FUEL (FOR DIESEL)						
8510-	2H..HJ60			23300-68030-	1	567	
8008-8510	3B..BJ60			23300-56040-	1	455	566
	23301 BODY SUB-ASSY, FUEL FILTER						
8008-8510	3B..BJ60			23311-56040-	1	455	566
	23303 ELEMENT SUB-ASSY, FUEL FILTER						
8510-	2H..HJ60			23303-54071-	1	567	
8008-8510	3B..BJ60			23303-56031-	1	455	566
	23312 GASKET, FILTER BOWL						
8008-8510	3B..BJ60			23312-56021-	1	455	566
	23319 SCREW, FUEL PIPE HOLLOW						
8008-8201	3B..BJ60			23319-56010-	1	455	
8201-	3B,2H..BJ60,HJ60			23319-48010-	1		
	23338 GASKET (FOR WARNING SWITCH)						
8008-	3B,2H..BJ60,HJ60			23338-54010-	1	455	
	23351 PLUG, AIR VENT						
8008-8201	3B..BJ60			23351-46010-	1	455	
8201-8510	3B..BJ60			47547-12030-	1		566
8008-	3B,2H..BJ60,HJ60	SEDIMENTER		23351-54010-	2	455	
	23352 PLUG, BLEEDER						
8510-	2H..HJ60			47547-12030-	1	567	
	23353 RING, O (FOR AIR VENT PLUG)						
8008-8201	3B..BJ60			23353-46010-	1	455	
8008-	3B,2H..BJ60,HJ60	SEDIMENTER		23353-54010-	2	455	
	23921 SUPPORT, FUEL FILTER						
8008-	2F..FJ60			23921-61021-	1	455	
	23930 SEDIMENTER ASSY, FUEL						
8008-	3B,2H..BJ60,HJ60			23930-58020-	1	455	
	23941 PROTECTOR, FUEL FILTER, NO.1						
8008-8210	3B..BJ60			23941-58010-	1	455	466
8210-8510	3B..BJ60			23941-58011-	1	467	566
	23942 PROTECTOR, FUEL FILTER, NO.2						
8008-8210	3B..BJ60			23942-58010-	1	455	466

MR4-13-0214

FIG.25-01 EXHAUST GAS RECIRCULATION SYSTEM

(8008-)2F..USA

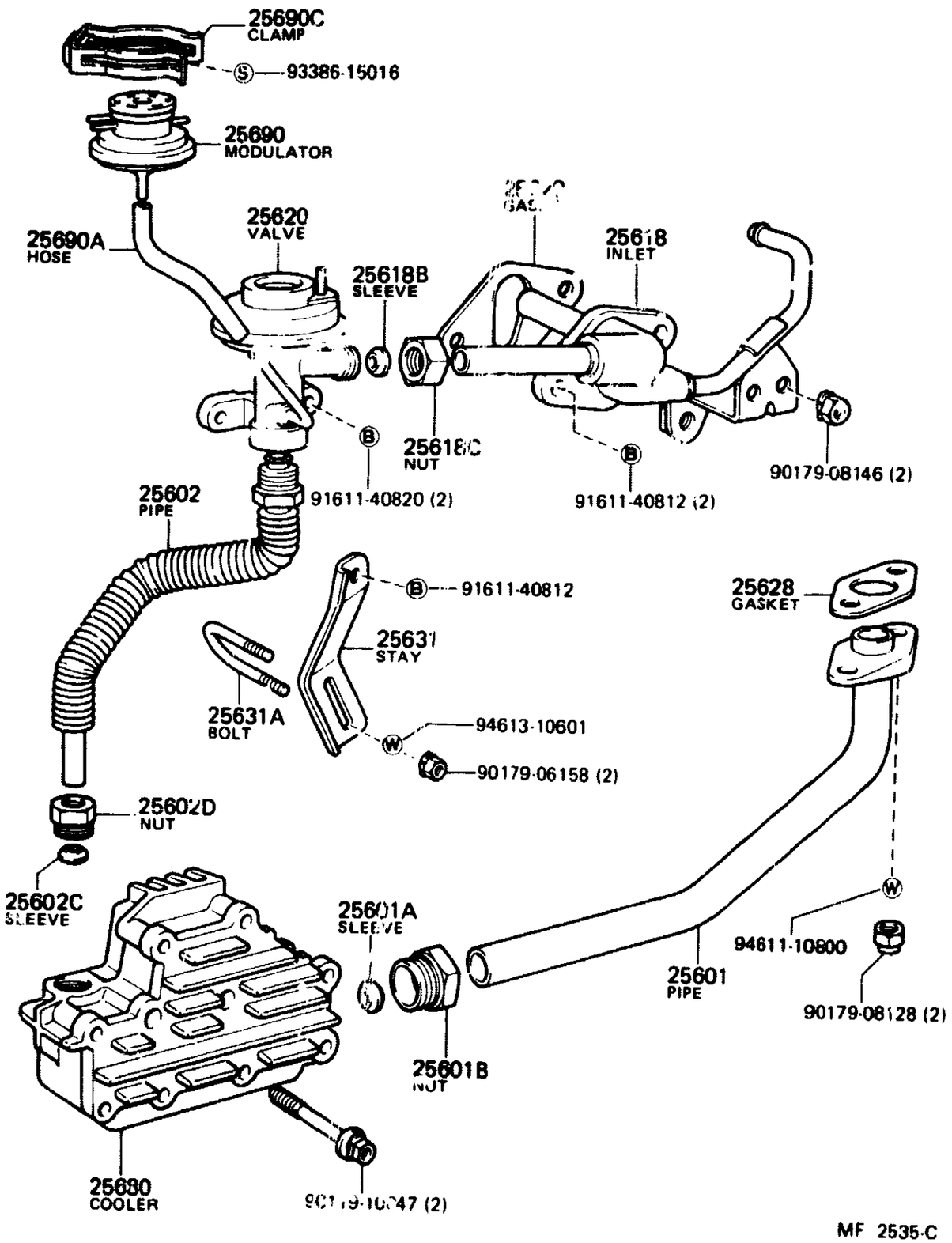

MF 2535-C

PROD.DATE	MODELS	DESCRIPTION	R/P	PART NUMBER	QTY	REV.REF.CODE FROM	REV.REF.CODE UP TO
FIG.	25-01 EXHAUST GAS RECIRCULATION SYSTEM						
	25601 PIPE SUB-ASSY, EGR, NO.1						
8008-	2F..FJ60..USA			25601-61040-	1	455	
	25601A SLEEVE, BALL, EGR PIPE, NO.1						
8008-	2F..FJ60..USA			90410-23041-	1	455	
	25601B NUT, UNION, EGR PIPE, NO.1						
8008-	2F..FJ60..USA			90402-33079-	1	455	
	25602 PIPE SUB-ASSY, EGR, NO.2						
8008-	2F..FJ60..USA			25602-61030-	1	455	
	25602C SLEEVE, BALL (FOR EGR PIPE, NO.2)						
8008-	2F..FJ60..USA			90410-18002-	1	455	
	25602D NUT, UNION (FOR EGR PIPE, NO.2)						
8008-	2F..FJ60..USA			90402-26072-	1	455	
	25618 INLET, EGR						
8008-	2F..FJ60..USA			25618-61011-	1	455	
	25618B SLEEVE, BALL (FOR EGR INLET)						
8008-	2F..FJ60..USA			90410-18002-	1	455	
	25618C NUT, OLIVE E (FOR EGR INLET)						
8008-	2F..FJ60..USA			90402-26074-	1	455	
	25620 VALVE ASSY, EGR						
8008-	2F..FJ60..USA			25620-61071-	1	455	
	25628 GASKET, EGR INLET						
8008-	2F..FJ60..USA	EXHAUST MANIFOLD		25628-61020-	1	455	
8008-	2F..FJ60..USA	INTAKE MANIFOLD		25628-61031- (25628-61040-)	1	455	
	25631 STAY, EGR PIPE, NO.1						
8008-	2F..FJ60..USA			25631-61030-	1	455	

PROD.DATE	MODELS	DESCRIPTION	R/P	PART NUMBER	QTY	REV.REF.CODE FROM	REV.REF.CODE UP TO
	25631A	BOLT (FOR EGR PIPE CLAMP)					
8008-	2F••FJ60••USA			90117-06131-	1	455	
	25680	COOLER ASSY, EGR					
8008-	2F••FJ60••USA			25680-61030-	1	455	
	25690	MODULATOR ASSY, EGR VACUUM					
8008-	2F••FJ60••USA			25870-61011-	1	455	
	25690A	HOSE (FOR EGR VACUUM MODULATOR)					
8008-	2F••FJ60••USA			90445-110[illegible]-	1	455	
	25690C	CLAMP (FOR EGR VACUUM MODULATOR)					
8008-	2F••FJ60••USA			90461-10446-	1	455	

(8000-8510)3B

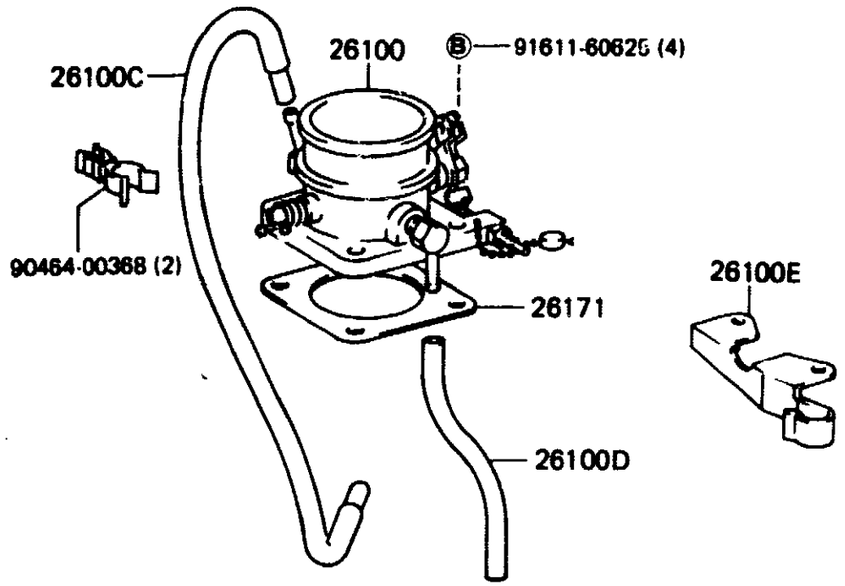

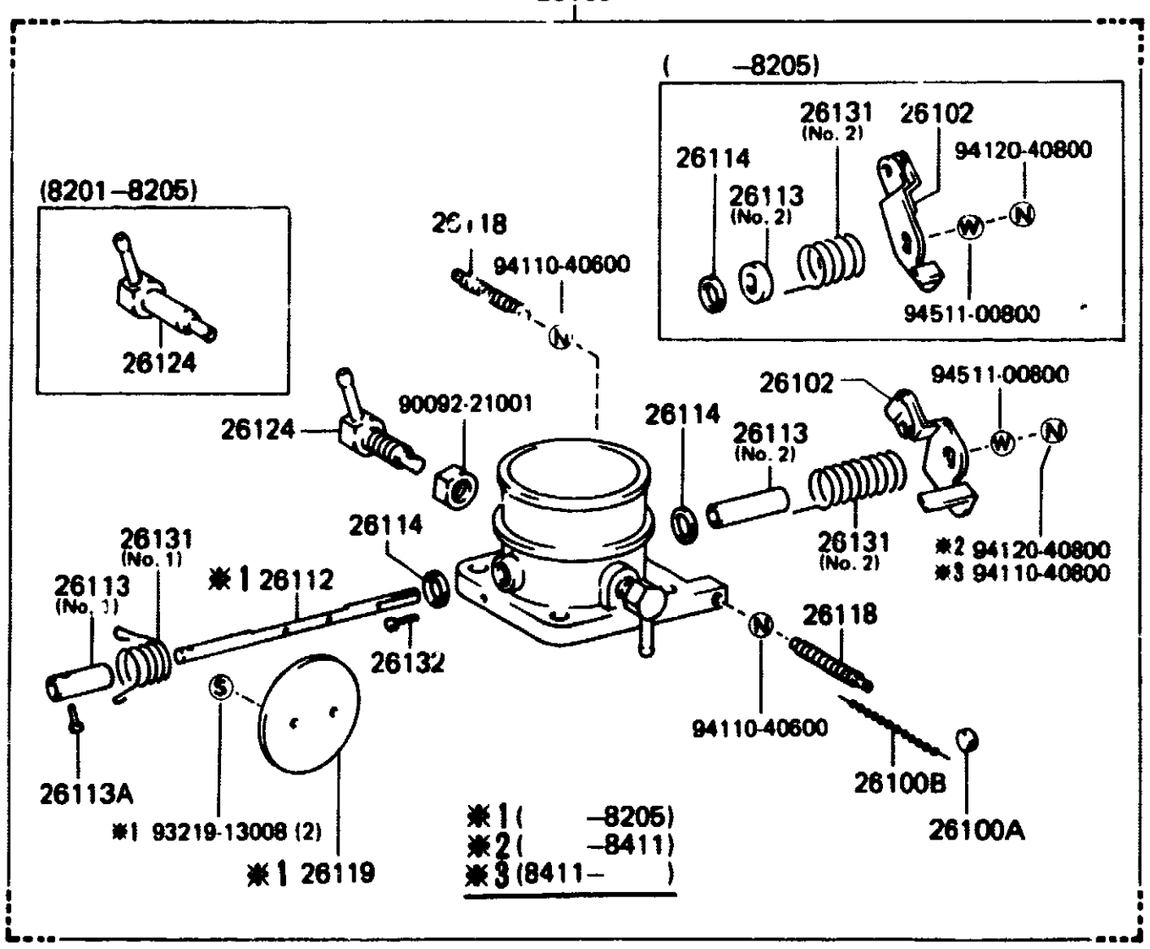

MF 2965-C

(8510-)2H••MTM

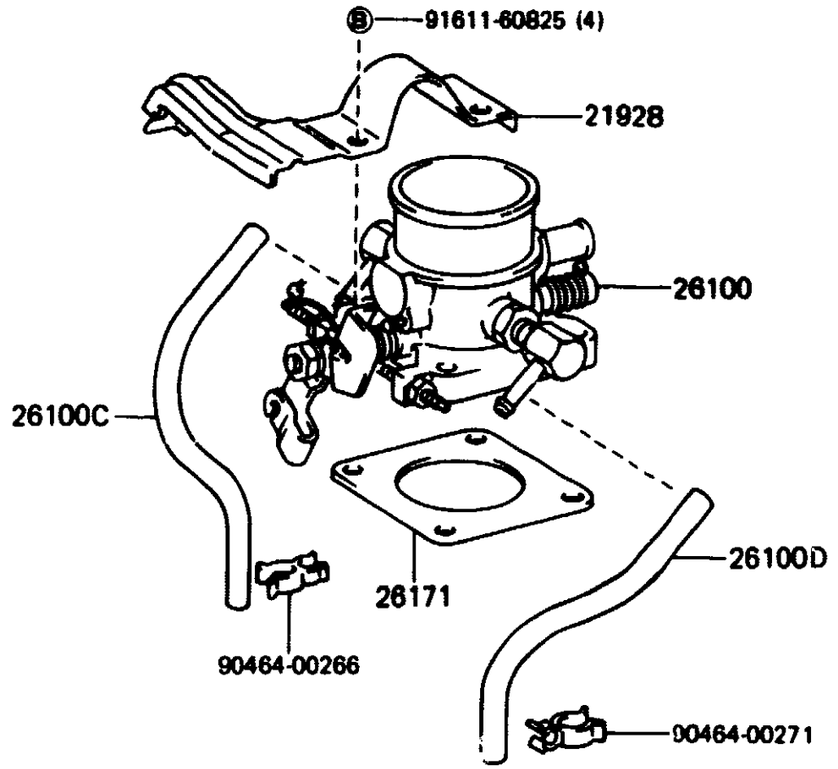

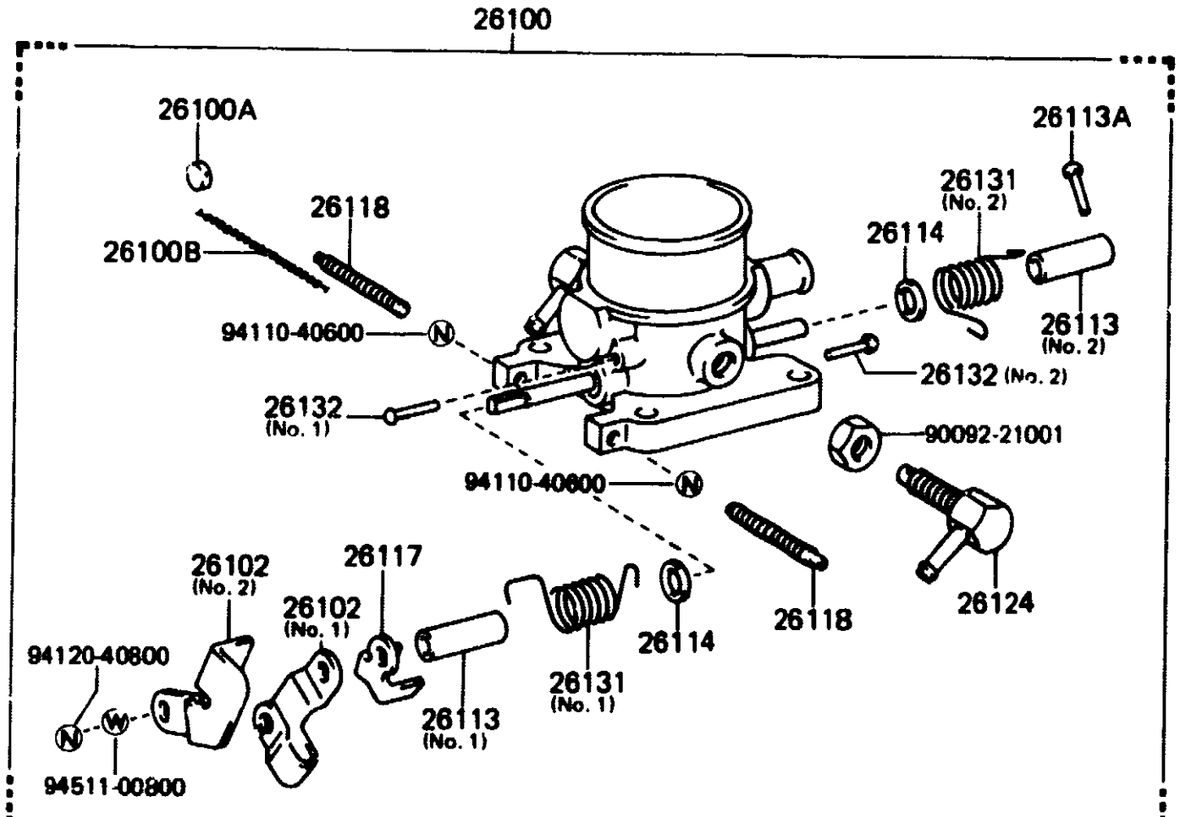

MF 3572

(8510-)2H..ATM

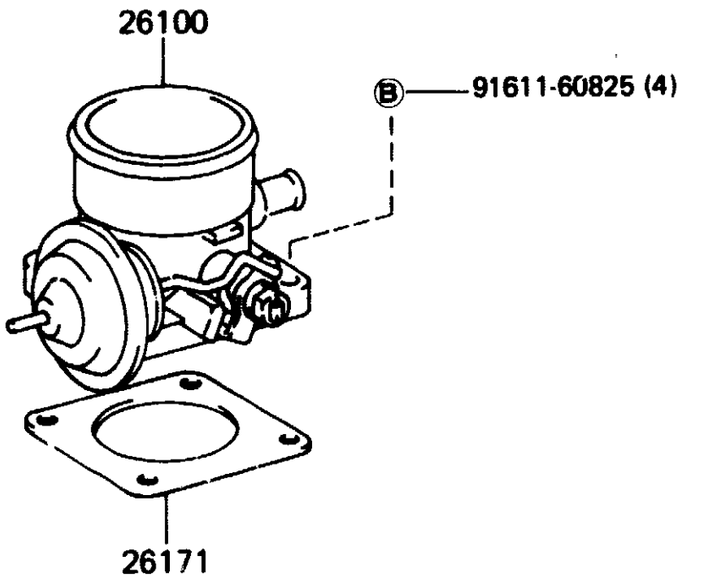

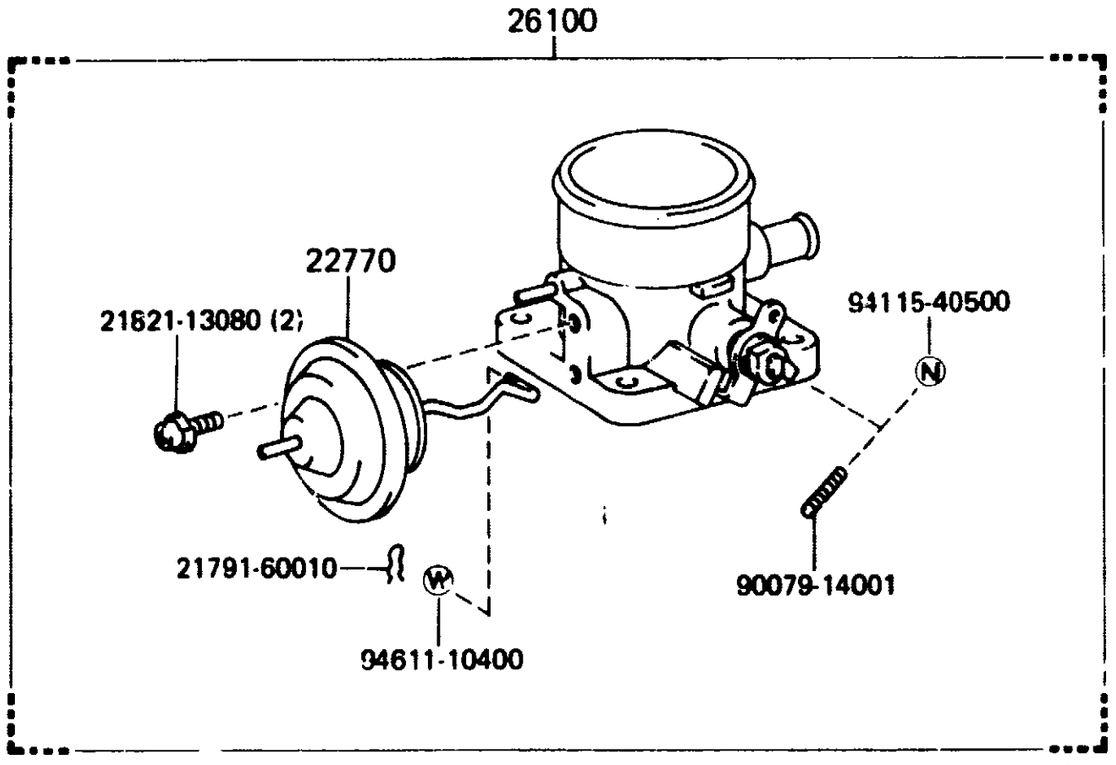

GENUINE TOYOTA PARTS

PROD.DATE	MODELS	DESCRIPTION	R/P	PART NUMBER	QTY	REV.REF.CODE FROM	REV.REF.CODE UP TO
FIG.	26-06 VENTURI						
	21928 SUPPORT, THROTTLE WIRE						
8510-	..HJ60..MTM			21928-68010-	1	567	
	22770 ACTUATOR, IDEL UP						
8510-	2H..HJ60..ATM			26133-68030-	1	567	
	26100 VENTURI ASSY						
8510-	2H..HJ60..ATM			26100-68030-	1	567	
8510-	2H..HJ60..MTM			26100-68012-	1	567	
8008-8205	3B..BJ60			26100-58020-	1	455	
8205-8411	3B..BJ60			26100-58021-	1		514
8411-8510	3B..BJ60			26100-58022-	1	515	566
	26100A SEAL, LEAD						
8008-	3B,2H..BJ60,HJ60..MTM			22354-77050-	1	455	
	26100B WIRE, SEAL						
8510-	2H..HJ60..MTM			22355-76010-	1	567	
8008-8510	3B..BJ60			22355-36010-	1	455	566
	26100C HOSE, VACCUM NO.1 (VENTURI TO GOVERNOR)						
8510-	2H..HJ60..MTM			90445-14068-	1	567	
8008-8510	3B..BJ60			90447-12016-	1	455	566
	26100D HOSE, VACCUM NO.2 (VENTURI TO GOVERNOR)						
8510-	2H..HJ60..MTM			90445-14067-	1	567	
8008-8510	3B..BJ60			90447-12001-	1	455	566
	26100E CLAMP (FOR FUEL HOSE)						
8008-8510	3B..BJ60			90462-12025-	1		566
	26102 LEVER SUB-ASSY, THROTTLE SHAFT ADJUSTING						
8510-	2H..HJ60..MTM	NO.1		26111-68011-	1	567	
8510-	2H..HJ60..MTM	NO.2		26111-68012-	1	567	
8008-8205	3B..BJ60			26102-58020-	1	455	

PROD.DATE	MODELS	DESCRIPTION	R/P	PART NUMBER	QTY	REV.REF.CODE FROM	REV.REF.CODE UP TO
	26102 LEVER SUB-ASSY, THROTTLE SHAFT ADJUSTING						
	CONTINUED						
8205-8411	3B••BJ60			26102-58021-	1		514
8411-8510	3B••BJ60			26111-58022-	1	515	566
	26112 SHAFT, VENTURI THROTTLE VALVE						
8008-8205	3B••BJ60			26112-56050-	1	455	
	26113 COLLAR, THROTTLE VALVE SHAFT						
8510-	2H••HJ60••MTM	NO.1		26113-68012-	1	567	
8510-	2H••HJ60••MTM	NO.2		26113-68013-	1	567	
8008-8205	3B••BJ60	NO.1		26113-56050-	1	455	
8008-8205	3B••BJ60	NO.2		26113-58020-	1	455	
8205-8510	3B••BJ60	NO.1		26113-58021-	1		566
8205-8510	3B••BJ60	NO.2		26113-68012-	1		566
	26113A PIN, THROTTLE VALVE SHAFT						
8008-	3B,2H••BJ60,HJ60••MTM			26132-56010-	1	455	
	26114 WASHER, THROTTLE VALVE SHAFT ADJUSTING						
8008-	3B,2H••BJ60,HJ60••MTM	T=0.1		26114-76010-	2	455	
8008-	3B,2H••BJ60,HJ60••MTM	T=0.2		26115-76010-	2	455	
8008-	3B,2H••BJ60,HJ60••MTM	T=0.5		26116-76010-	2	455	
	26117 PLATE, THROTTLE VALVE SHAFT STOP						
8510-	2H••HJ60••MTM			26117-68011-	1	567	
	26118 SCREW, STOP PLATE ADJUSTING						
8008-	3B,2H••BJ60,HJ60••MTM			# 26118-48014- (22325-77020-)	2	455	
	26119 VALVE, VENTURI THROTTLE						
8008-8205	3B••BJ60			26119-56030-	1	455	
	26124 CONNECTOR, VENTURI PIPE						
8510-	2H••HJ60••MTM			26124-68010-	1	567	

PROD.DATE	MODELS	DESCRIPTION	R/P	PART NUMBER	QTY	REV.REF.CODE FROM	REV.REF.CODE UP TO
	26124 CONNECTOR, VENTURI PIPE						
	CONTINUED						
8008-8201	3B••BJ60			26124-58020-	1	455	
8201-8205	3B••BJ60			26124-58021-	1		
8205-8411	3B••BJ60			26124-56030-	1		514
8411-8510	3B••BJ60			26124-58020-	1	515	566
	26131 SPRING, RETURN						
8510-	2H••HJ60••MTM	NO.2		26131-68010-	1	567	
8510-	2H••HJ60••MTM	NO.1		26131-68011-	1	567	
8008-8205	3B••BJ60	NO.2		26131-58020-	1	455	
8008-8205	3B••BJ60	NO.1		26131-58022-	1	455	
8205-8510	3B••BJ60	NO.1		26131-58023-	1		566
8205-8510	3B••BJ60	NO.2		26131-58024-	1		566
	26132 PIN						
8510-	2H••HJ60••MTM	NO.1		26132-56010-	1	567	
8510-	2H••HJ60••MTM	NO.2		26132-56011-	1	567	
8008-8510	3B••BJ60				1	455	566
	26171 GASKET, VENTURI						
8510-	2H••HJ60			26171-68010-	1	567	
8008-8510	3B••BJ60			26171-56020-	1	455	566

(8008-8510)BJ60

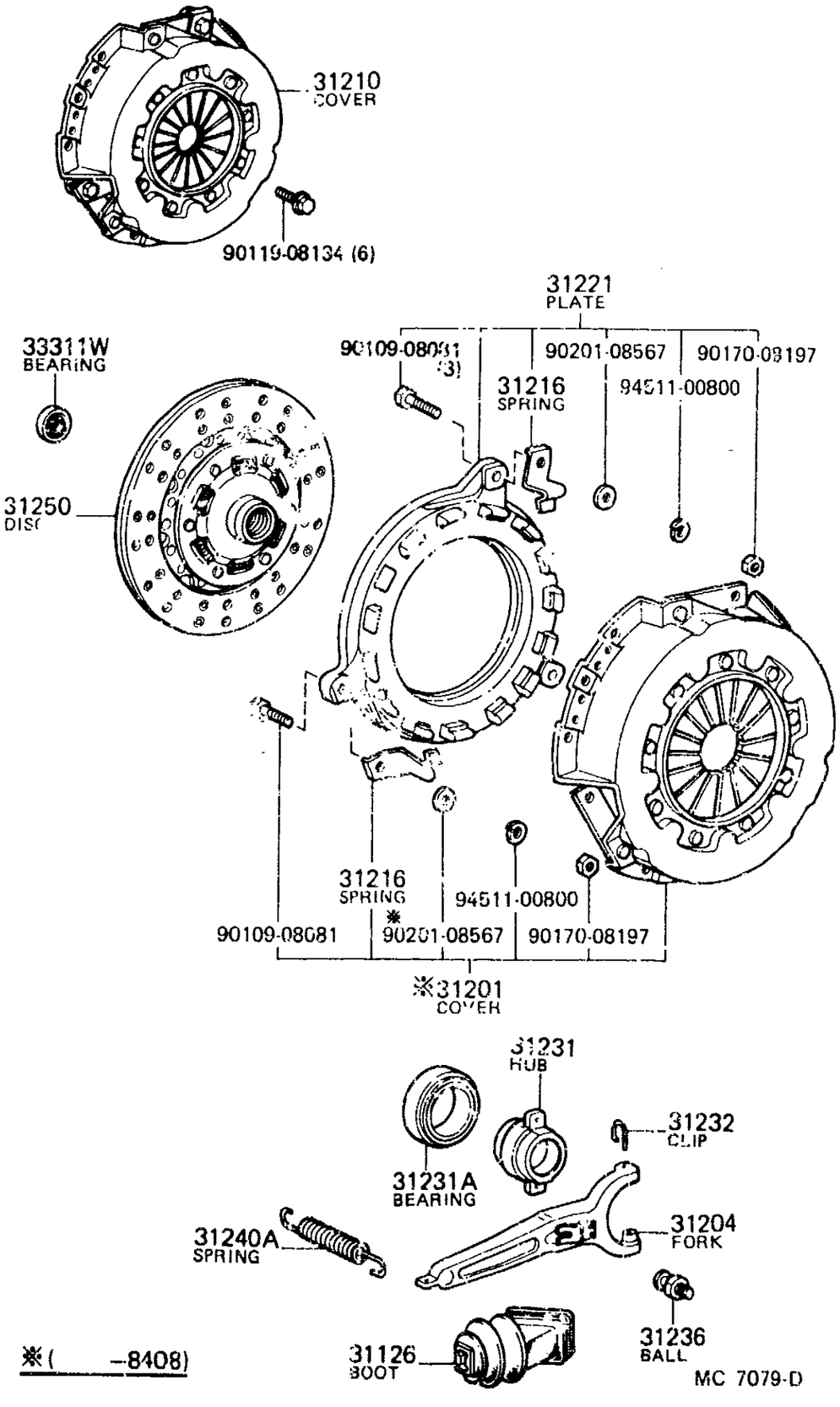

※(-8408)

MC 7079-D

(8008-)HJ60,FJ60

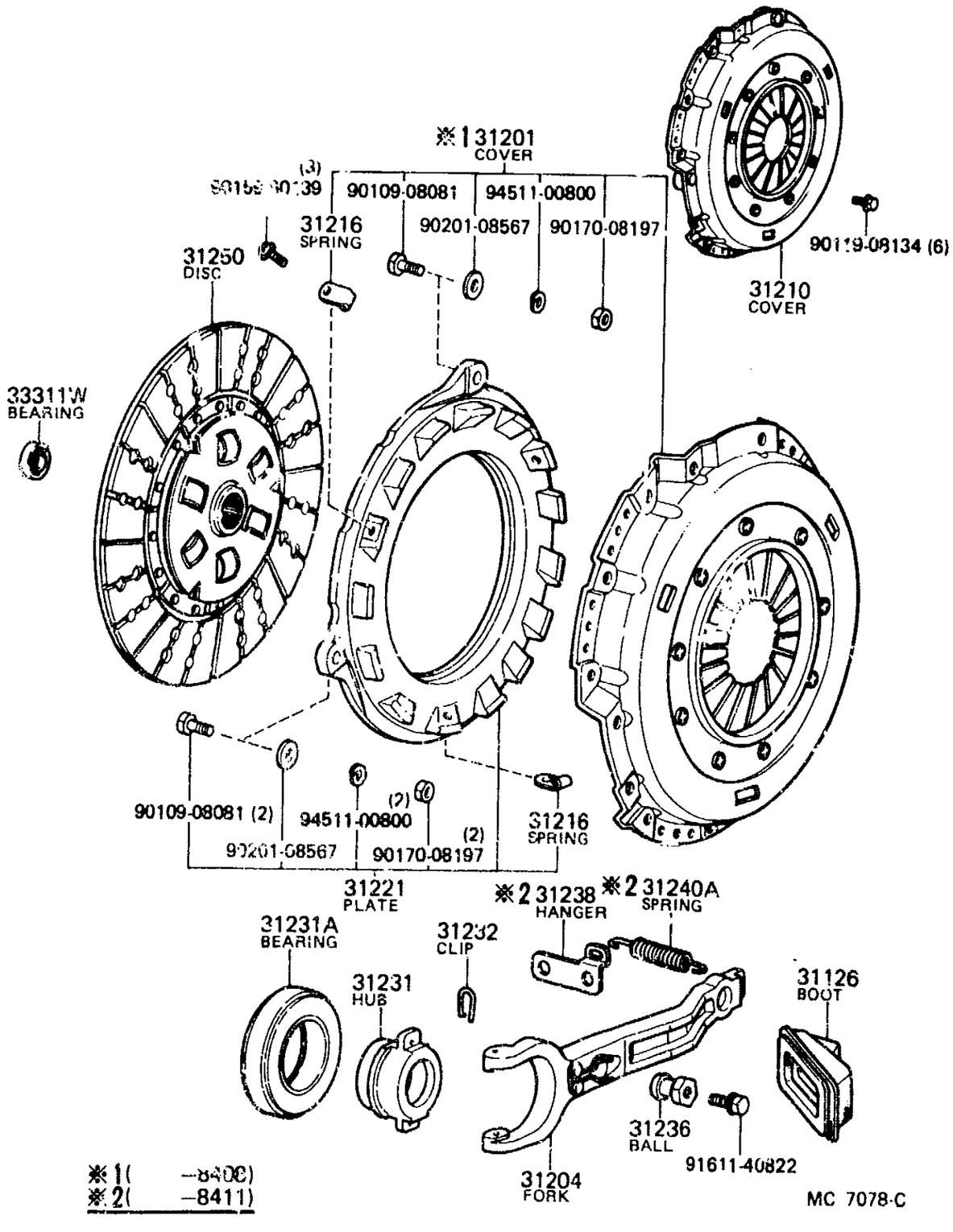

※1(-8408)
※2(-8411)

MC 7078-C

PROD.DATE	MODELS	DESCRIPTION	R/P	PART NUMBER	QTY	REV.REF.CODE FROM	REV.REF.CODE UP TO
FIG.	31-01 CLUTCH & RELEASE FORK						
	31126 BOOT, CLUTCH RELEASE FORK						
8008-8411	BJ60			31126-36030-	1	455	514
8411-8510	BJ60			31126-60030-	1	515	566
8008-	HJ60,FJ60..MTM			31126-60021-	1	455	
	31201 COVER SUB-ASSY, CLUTCH						
8008-8105	BJ60			# 31201-39115- (31210-36100-)	1	455	456
8105-8408	BJ60			# 31201-39097- (31210-36072-)	1	457	
8008-8101	FJ60			# 31201-69026- (31201-69027-)	1	455	
8101-8408	FJ60			# 31201-69027- (31210-60070-)	1		
	31204 FORK SUB-ASSY, CLUTCH RELEASE						
8008-8411	BJ60			31204-60050-	1	455	514
8411-8510	BJ60			31204-60080-	1	515	566
8008-8504	FJ60			31204-60030-	1	455	554
8504-	FJ60			31204-60060-	1	555	
8510-	HJ60..MTM			31204-60070-	1	567	
	31210 COVER ASSY, CLUTCH						
8008-8105	BJ60			# 31210-36090- (31210-36100-)	1	455	456
8105-8411	BJ60			31210-36072-	1	457	514
8411-8510	BJ60			31210-36100-	1	515	566
8008-8101	FJ60			# 31210-60041- (31210-60042-)	1	455	
8101-8408	FJ60			# 31210-60042- (31210-60070-)	1		
8408-	HJ60,FJ60..MTM			31210-60070-	1		
	31216 SPRING, CLUTCH RETRACTING						
8008-8510	BJ60			31216-36010-	3	455	566
8008-	HJ60,FJ60..MTM			31216-60010-	3	455	

PROD.DATE	MODELS	DESCRIPTION	R/P	PART NUMBER	QTY	REV.REF.CODE FROM	REV.REF.CODE UP TO
	31221 PLATE, CLUTCH PRESSURE						
8008-8105	BJ60			31221-39125-	1	455	456
8105-8411	BJ60			31221-39085-	1	457	514
8411-8510	BJ60			31221-39125-	1	515	566
8008-	HJ60,FJ60..MTM			31221-69025-	1	455	
	31231 HUB, CLUTCH RELEASE BEARING						
8008-8411	BJ60			31231-60060-	1	455	514
8411-8510	BJ60			31231-60080-	1	515	566
8008-8504	FJ60			# 31231-60040- (31231-60070-)	1	455	554
8504-	FJ60			31231-60070-	1	555	
8510-	HJ60..MTM			31231-60050-	1	567	
	31231A BEARING, BALL (FOR CLUTCH RELEASE HUB)						
8008-8202	BJ60			# 90363-45001- (90363-45002-)	1	455	
8202-8510	BJ60			90363-45002-	1		566
8008-8105	FJ60			# 90363-52086- (90363-52001-)	1	455	
8105-	HJ60,FJ60..MTM			90363-52001-	1		
	31232 CLIP OR SPRING, RELEASE BEARING HUB						
8008-	BJ60,HJ60,FJ60..MTM			31232-60020-	2	455	
	31236 BALL, RELEASE FORK						
8008-8411	BJ60			31236-36010-	1	455	514
8411-	BJ60,HJ60..MTM			31236-60070-	1	515	
8008-	FJ60			31236-60020-	1	455	
	31238 HANGER, RELEASE FORK RETRACTING SPRING						
8008-8504	FJ60			31238-60041-	1	455	554
	31240A SPRING, TENSION (FOR CLUTCH RELEASE FORK RETURN)						
8008-8411	BJ60			90506-16297-	1	455	514
8008-8504	FJ60			90506-16475-	1	455	554

GENUINE TOYOTA PARTS

	PROD.DATE	MODELS	DESCRIPTION	R/P	PART NUMBER	QTY	REV.REF.CODE FROM	REV.REF.CODE UP TO
		31250 DISC ASSY, CLUTCH						
	8008-8110	BJ60		#	31250-60040- (31250-36113-)	1	455	458
	8110-8405	BJ60		#	31250-36113- (31250-60090-)	1	459	
	8405-8510	BJ60		#	31250-60090- (31250-36280-)	1		566
	8008-8408	FJ60		#	31250-60020- (31250-60080-)	1	455	
	8408-	FJ60			31250-60080-	1		
C	8510-8601	HJ60••MTM		#	31250-60100- (31250-60140-)	1	567	
C	8601-	HJ60••MTM			31250-60140-	1		
		33311W BEARING (FOR INPUT SHAFT)						
	8008-8510	BJ60			90363-12002-	1	455	566
	8008-	HJ60,FJ60••MTM			90363-15004-	1	455	

PROD.DATE	MODELS	DESCRIPTION	R/P	PART NUMBER	QTY	REV.REF.CODE FROM	REV.REF.CODE UP TO

FIG. 31-02 CLUTCH PEDAL & FLEXIBLE HOSE

2-D1

MR4-1[illegible]-0414

(8008-)

ILLUST•NO• 1OF2

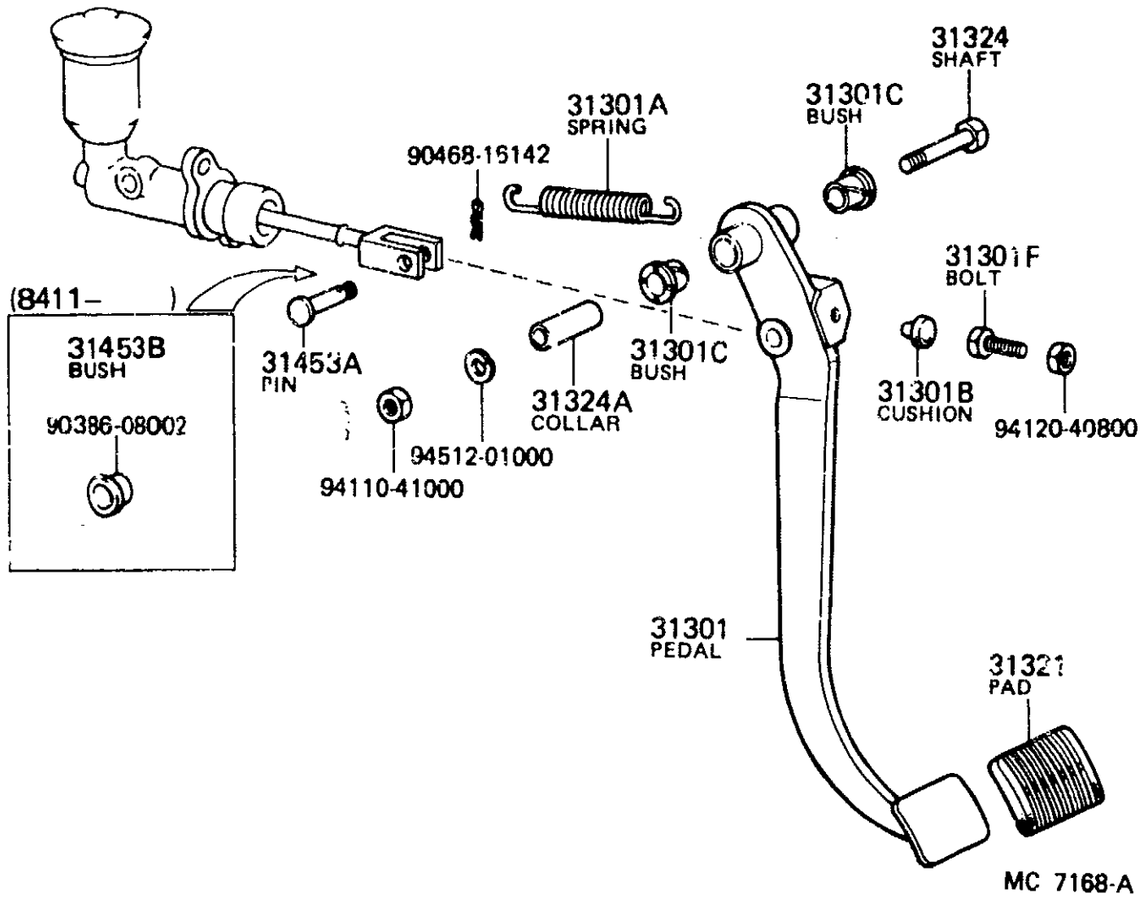

(8008-)

ILLUST•NO• 2OF2

HJ, FJ

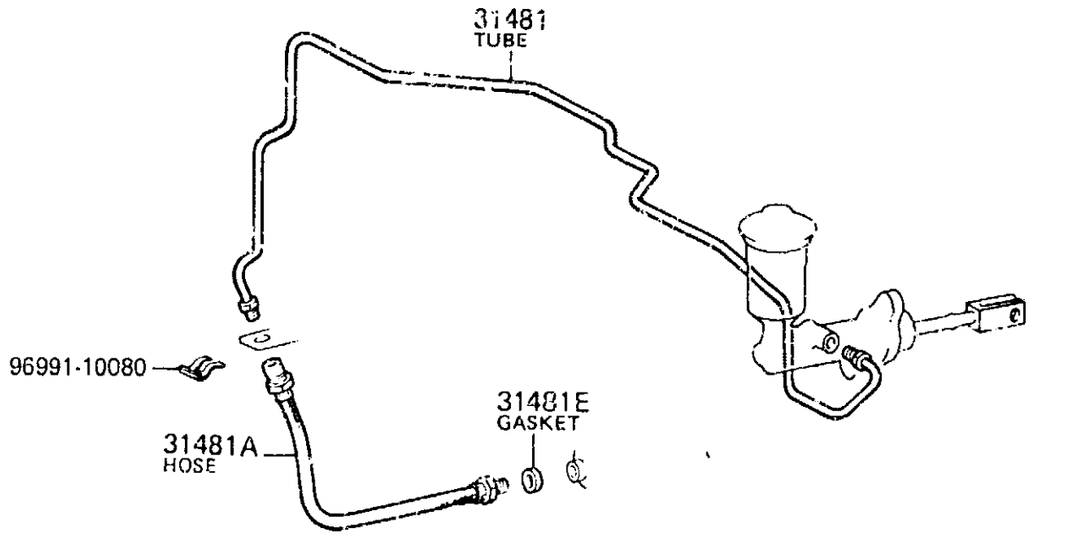

BJ

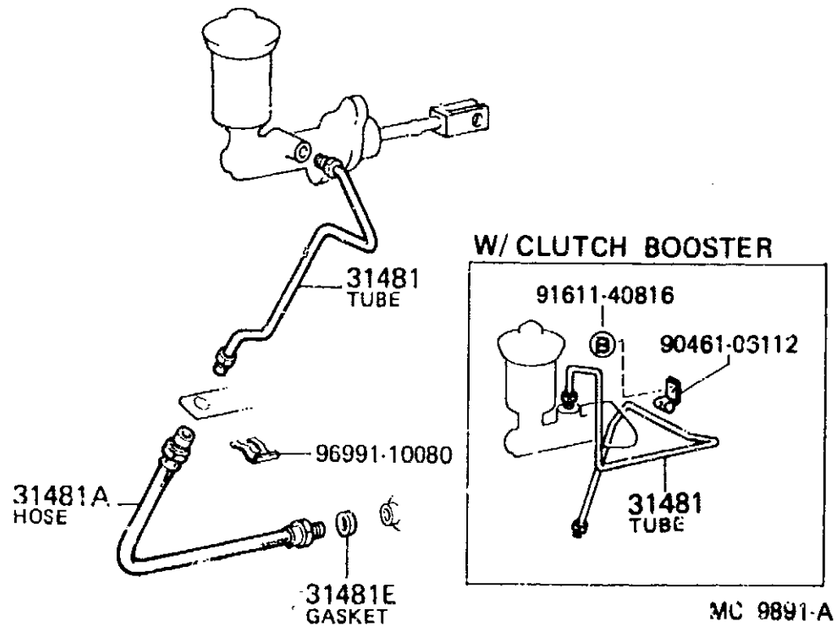

GENUINE TOYOTA PARTS

PROD.DATE	MODELS	DESCRIPTION	R/P	PART NUMBER	QTY	REV.REF.CODE FROM	REV.REF.CODE UP TO
FIG. 31-02 CLUTCH PEDAL & FLEXIBLE HOSE							
	31301 PEDAL SUB-ASSY, CLUTCH						
8008-8411	BJ60,FJ60			31301-60080-	1	455	514
8411-	BJ60,HJ60..MTM			31301-60081-	1	515	
8411-8504	FJ60			31301-60080-	1	515	554
8504-	FJ60			31301-60081-	1	555	
	31301A SPRING (FOR CLUTCH PEDAL)						
8008-	BJ60,HJ60,FJ60..MTM			90506-14037-	1	455	
	31301B CUSHION (FOR CLUTCH PEDAL)						
8008-	BJ60,HJ60,FJ60..MTM			90541-06008-	1	455	
	31301C BUSH (FOR CLUTCH PEDAL)						
8008-	BJ60,HJ60,FJ60..MTM			90386-13192-	2	455	
	31301F BOLT (FOR CLUTCH PEDAL STOPPER)						
8008-	BJ60,HJ60,FJ60..MTM			90101-08052-	1	455	
	31321 PAD, CLUTCH PEDAL						
8008-	BJ60,HJ60,FJ60..MTM			31321-36010-	1	455	
	31324 SHAFT, CLUTCH PEDAL						
8008-	BJ60,HJ60,FJ60..MTM			91121-51070-	1	455	
	31324A COLLAR, CLUTCH PEDAL SHAFT						
8008-	BJ60,HJ60,FJ60..MTM			90387-10004-	1	455	
	31453A PIN, W/HOLE (FOR CLUTCH MASTER CYLINDER PUSH ROD CLEVIS)						
8008-8411	BJ60,FJ60			90249-10017-	1	455	514
8411-	BJ60,HJ60..MTM			90249-08018-	1	515	
8411-8504	FJ60			90249-10017-	1	515	554
8504-	FJ60			90249-08018-	1	555	
	31453B BUSH (FOR CLUTCH MASTER CYLINDER PUSH ROD CLEVIS)						
8411-8504	FJ60			90386-08002-	1	515	554
8504-	BJ60,HJ60,FJ60..MTM				1	555	

GENUINE TOYOTA PARTS

PROD.DATE	MODELS	DESCRIPTION	R/P	PART NUMBER	QTY	REV.REF.CODE FROM	REV.REF.CODE UP TO
	31481 TUBE, CLUTCH MASTER CYLINDER TO FLEXIBLE HOSE						
8008-8301	BJ60			31481-60270-	1	455	482
8301-8411	BJ60			31481-60320-	1	483	514
8301-8411	BJ60	W/CLUTCH BOOSTER		31481-60330-	1	483	514
8411-8510	BJ60			31481-60321-	1	515	566
8411-8510	BJ60	W/CLUTCH BOOSTER		31481-60331-	1	515	566
8008-8504	FJ60			31481-60250-	1	455	554
8510-	HJ60..MTM	W/CLUTCH BOOSTER		31481-60311-	1	567	
8504-	HJ60,FJ60..MTM			31481-60301-	1	555	
	31481A HOSE, CLUTCH, NO.1						
8008-8411	BJ60			90947-02267-	1	455	514
8411-8510	BJ60			96812-50240-	1	515	566
8008-8504	FJ60			90947-02358-	1	455	554
8504-	HJ60,FJ60..MTM			96812-50320-	1	555	
	31481E GASKET (FOR CLUTCH MASTER CYLINDER TO FLEXIBLE HOSE TUBE)						
8008-8411	BJ60,FJ60			90430-10074-	1	455	514
8411-8504	FJ60				1	515	554

FIG.31-03 CLUTCH MASTER CYLINDER

2-F1

MR4-11-0415

(8008-8411)BJ60,FJ60; (8411-8504)FJ60

(8411-)BJ60; (8504-)FJ60; (8510-)HJ60

W/O CLUTCH BOOSTER

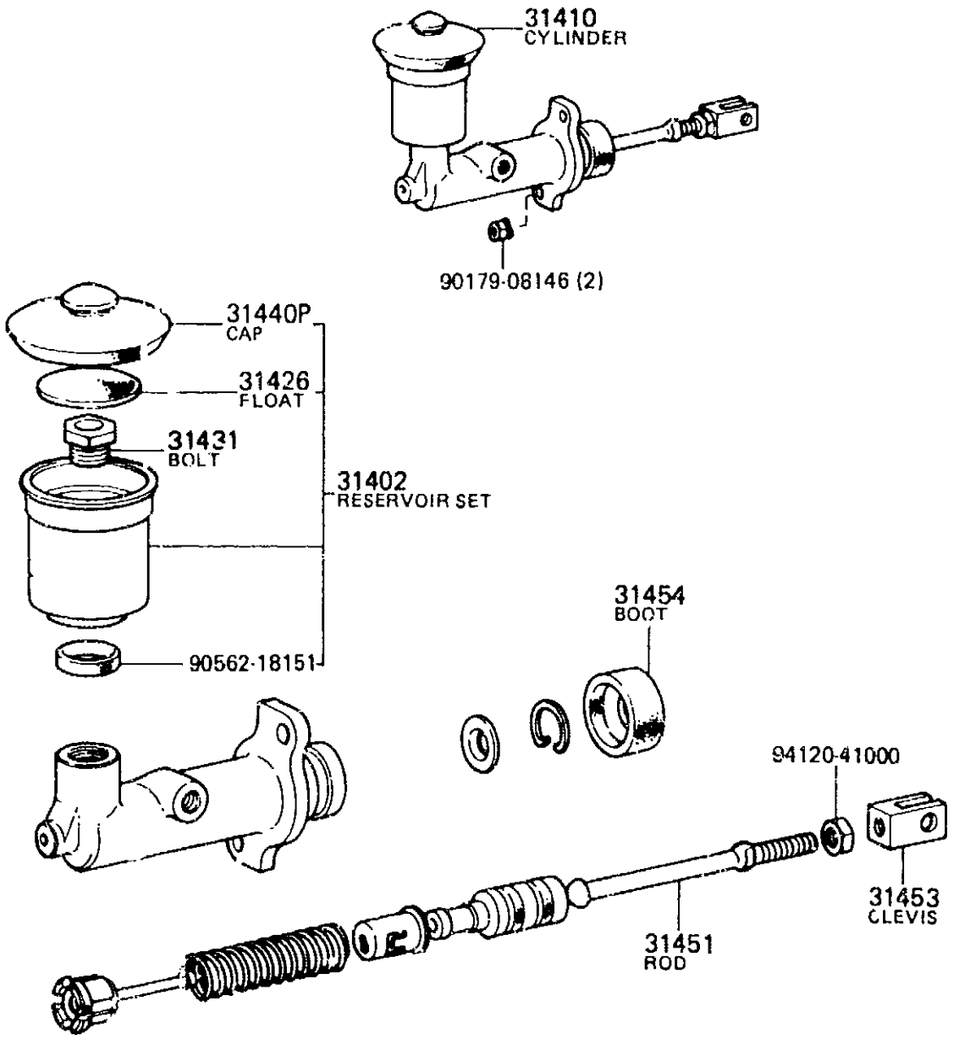

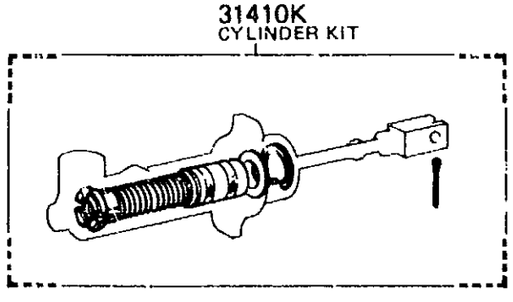

MC 7245-B

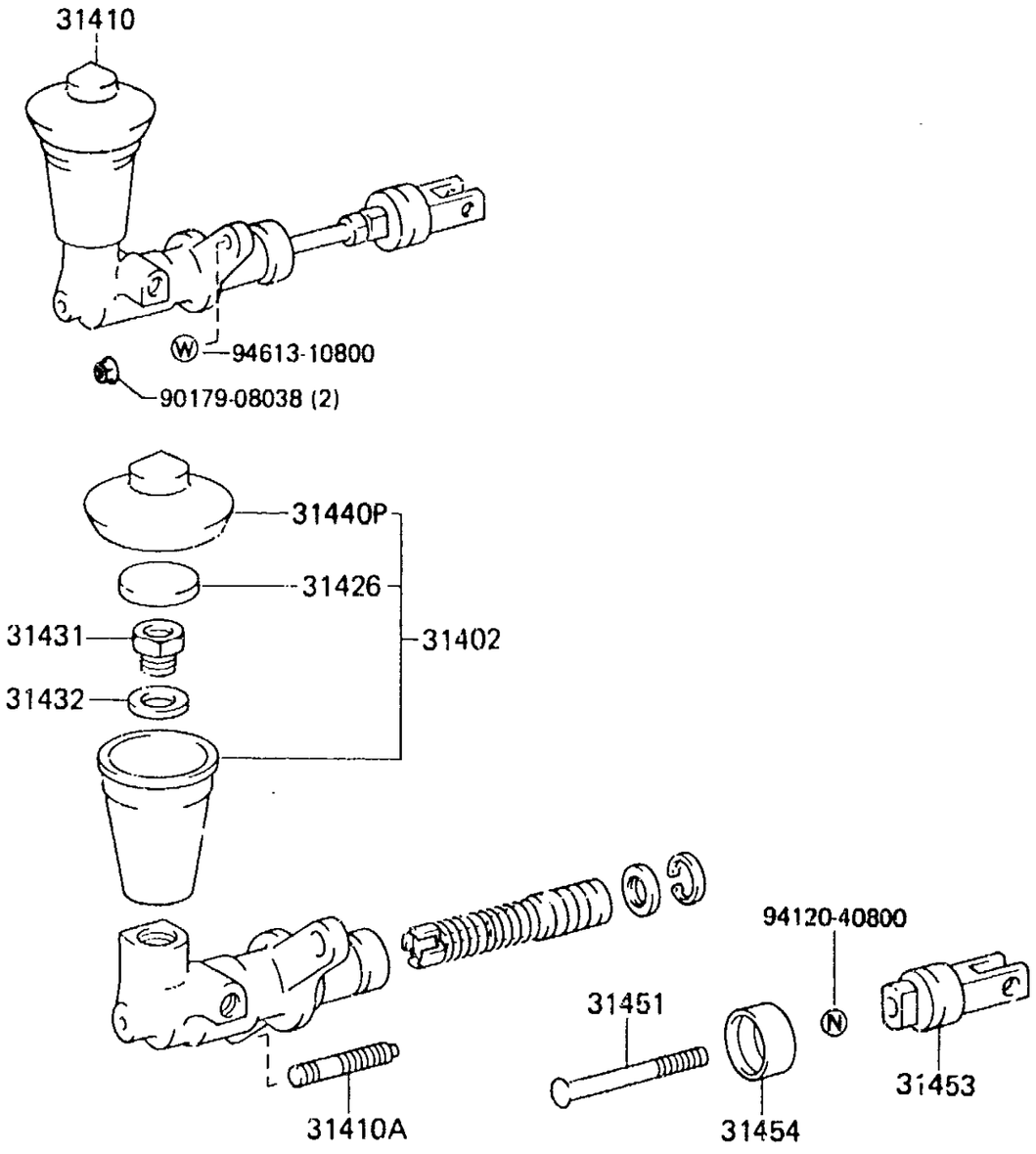

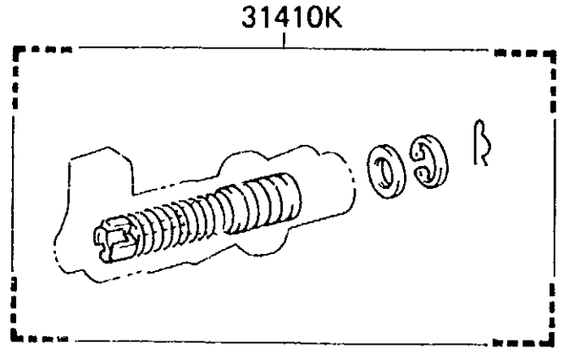

MC 3671-A

(8301-8411)BJ60

W/CLUTCH BOOSTER

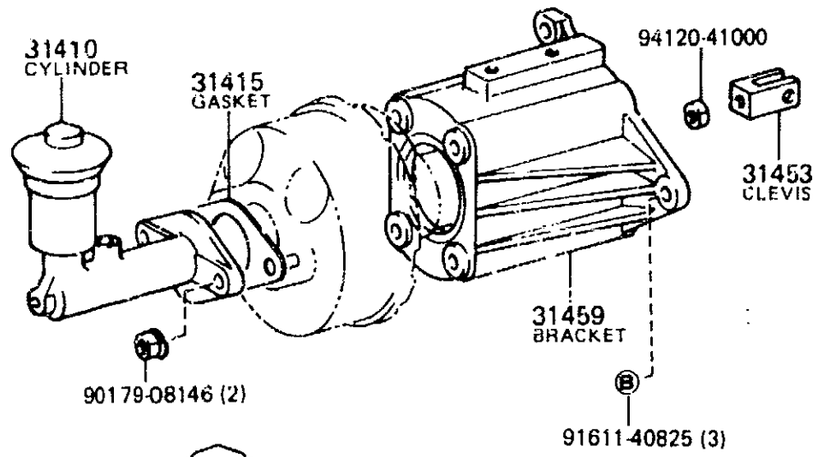

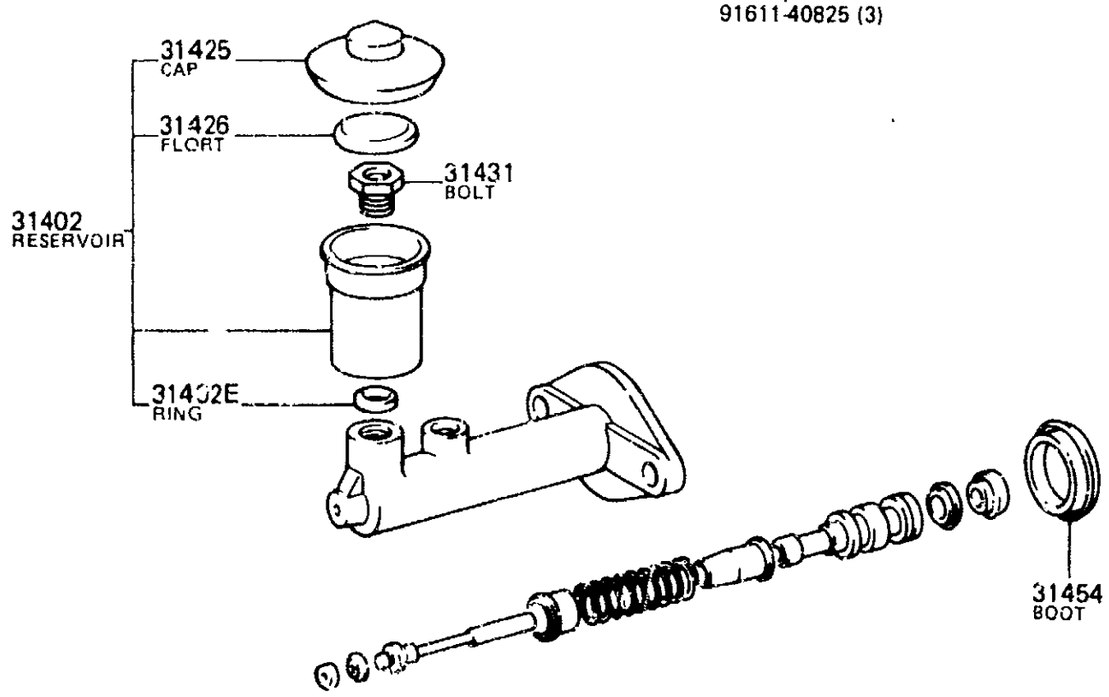

31410K
CYLINDER KIT

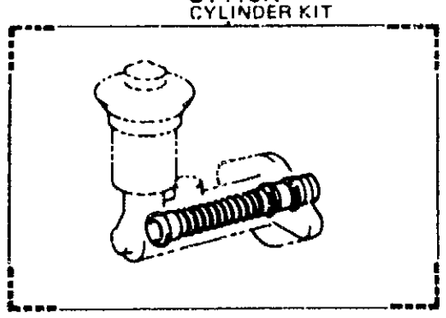

MC 8998

(8411-)HJ60,BJ60••MTM

W/ Clutch Booster

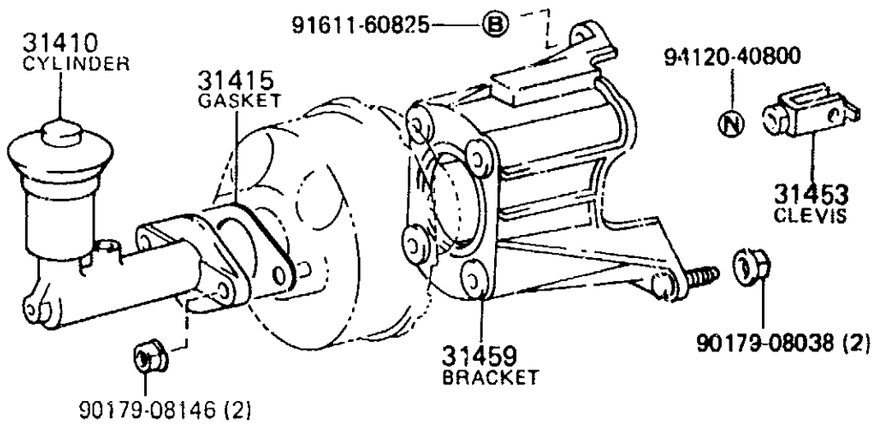

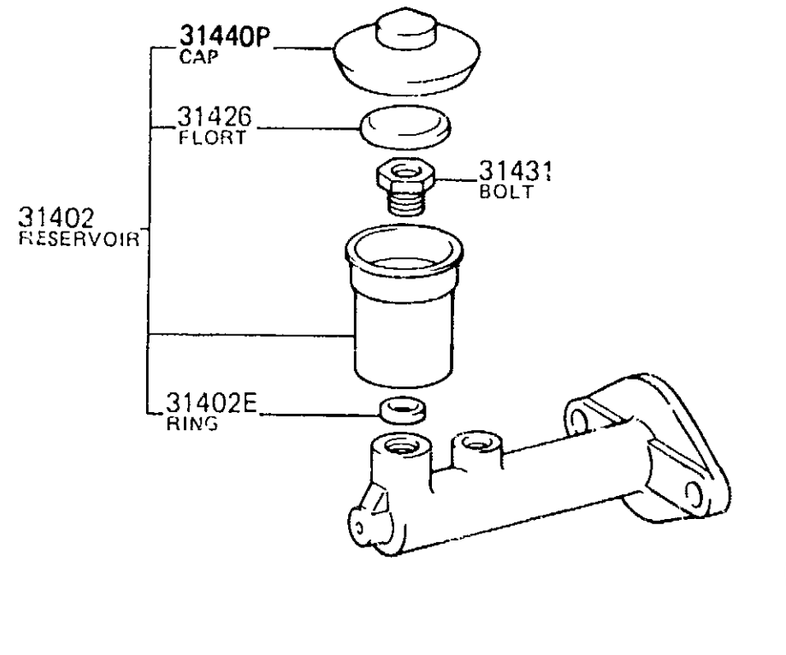

31410K
CYLINDER KIT

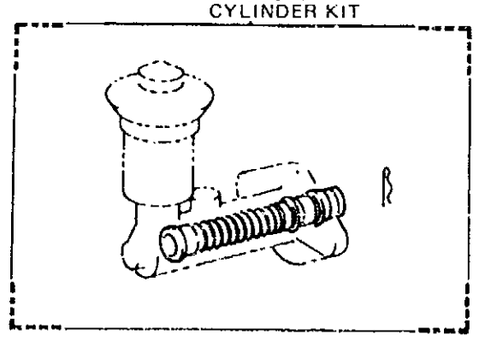

MC B676-A

PROD.DATE	MODELS	DESCRIPTION	R/P	PART NUMBER	QTY	REV.REF.CODE FROM	REV.REF.CODE UP TO
FIG. 31-03 CLUTCH MASTER CYLINDER							
31402	RESERVOIR SUB-ASSY, CLUTCH MASTER CYLINDER						
8411-8504	BJ60			31402-30030-	1	515	554
8008-8411	BJ60,FJ60			31402-35010-	1	455	514
8301-	BJ60,HJ60..MTM	W/CLUTCH BOOSTER		31402-20010-	1	483	
8504-	BJ60,HJ60,FJ60..MTM			31402-30030-	1	555	
8411-8504	FJ60			31402-35010-	1	515	554
31402E	RING (FOR CLUTCH MASTER CYLINDER RESERVOIR)						
8301-	BJ60,HJ60..MTM	W/CLUTCH BOOSTER		90562-18151-	1	483	
31410	CYLINDER ASSY, CLUTCH MASTER						
8301-8411	BJ60	W/CLUTCH BOOSTER	#	31401-60010- (31401-60020-)	1	483	514
8411-8504	BJ60			31410-60280-	1	515	554
8008-8411	BJ60,FJ60			31410-60060-	1	455	514
8411-	BJ60,HJ60..MTM	W/CLUTCH BOOSTER		31401-60020-	1	515	
8504-	BJ60,HJ60,FJ60..MTM			31410-60280-	1	555	
8411-8504	FJ60			31410-60060-	1	515	554
31410A	BOLT (FOR CLUTCH MASTER CYLINDER SETTING)						
8411-	BJ60,HJ60,FJ60..MTM			90116-08022-	1	515	
31410K	CYLINDER KIT, CLUTCH MASTER						
8411-8504	BJ60			04311-60050-	1	515	554
8008-8411	BJ60,FJ60			04311-60030-	1	455	514
8301-	BJ60,HJ60..MTM	W/CLUTCH BOOSTER		04311-60040-	1	483	
8504-	BJ60,HJ60,FJ60..MTM			04311-60050-	1	555	
8411-8504	FJ60			04311-60030-	1	515	554
31415	GASKET, CLUTCH MASTER CYLINDER						
8301-	BJ60,HJ60..MTM	W/CLUTCH BOOSTER		47275-14010-	1	483	

GENUINE TOYOTA PARTS

PROD.DATE	MODELS	DESCRIPTION	R/P	PART NUMBER	QTY	REV.REF.CODE FROM	REV.REF.CODE UP TO
31426	FLOAT, CLUTCH MASTER CYLINDER RESERVOIR						
8301-8411	BJ60	W/CLUTCH BOOSTER		31426-30011-	1	483	514
8411-8504	BJ60				1	515	554
8008-8411	BJ60,FJ60			31426-20010-	1	455	514
8504-	BJ60,HJ60,FJ60..MTM			31426-30011-	1	555	
8411-8504	FJ60			31426-20010-	1	515	554
31431	BOLT, CLUTCH MASTER CYLINDER RESERVOIR SET						
8411-8504	BJ60			47231-30010-	1	515	554
8008-8411	BJ60,FJ60			47231-20010-	1	455	514
8411-	BJ60,HJ60..MTM	W/CLUTCH BOOSTER			1	515	
8504-	BJ60,HJ60,FJ60..MTM			47231-30010-	1	555	
8411-8504	FJ60			47231-20010-	1	515	554
31432	WASHER, CLUTCH RESERVOIR SET BOLT						
8411-	BJ60,HJ60,FJ60..MTM			47232-30010-	1	515	
31440P	CAP ASSY, CLUTCH MASTER CYLINDER RESERVOIR FILLER						
8301-8411	BJ60	W/CLUTCH BOOSTER		47230-20040-	1	483	514
8411-8504	BJ60				1	515	554
8008-8411	BJ60,FJ60			31440-35010-	1	455	514
8504-	BJ60,HJ60,FJ60..MTM			47230-20040-	1	555	
8411-8504	FJ60			31440-35010-	1	515	554
31451	ROD, CLUTCH MASTER CYLINDER PUSH						
8411-8504	BJ60			31451-60050-	1	515	554
8008-8411	BJ60,FJ60			31451-30030-	1	455	514
8504-	BJ60,HJ60,FJ60..MTM			31451-60050-	1	555	
8411-8504	FJ60			31451-30030-	1	515	554
31453	CLEVIS, CLUTCH MASTER CYLINDER PUSH ROD						
8411-8504	BJ60			31453-22010-	1	515	554
8008-8411	BJ60,FJ60			31453-30011-	1	455	514

PROD.DATE	MODELS	DESCRIPTION	R/P	PART NUMBER	QTY	REV.REF.CODE FROM	REV.REF.CODE UP TO
	31453 CLEVIS, CLUTCH MASTER CYLINDER PUSH ROD CONTINUED						
8504-	BJ60,HJ60,FJ60..MTM			31453-22010-	1	1101	
8411-8504	FJ60			31453-30011-	1	515	554
	31454 BOOT, CLUTCH MASTER CYLINDER						
8301-	BJ60,HJ60..MTM	W/CLUTCH BOOSTER		47265-20050-	1	483	
8008-	BJ60,HJ60,FJ60..MTM			31454-30030-	1	455	
	31459 BRACKET, CLUTCH MASTER CYLINDER						
8301-	BJ60	W/CLUTCH BOOSTER		31459-60030-	1	483	
8510-	HJ60..MTM	W/CLUTCH BOOSTER		31459-60020-	1	567	

PROD.DATE	MODELS	DESCRIPTION	R/P	PART NUMBER	QTY	REV.REF.CODE FROM	REV.REF.CODE UP TO

FIG•31-04 CLUTCH BOOSTER

2-J1

MR4-11-0417

(8301-)BJ60,HJ60••MTM

ILLUST•NO• 10F2

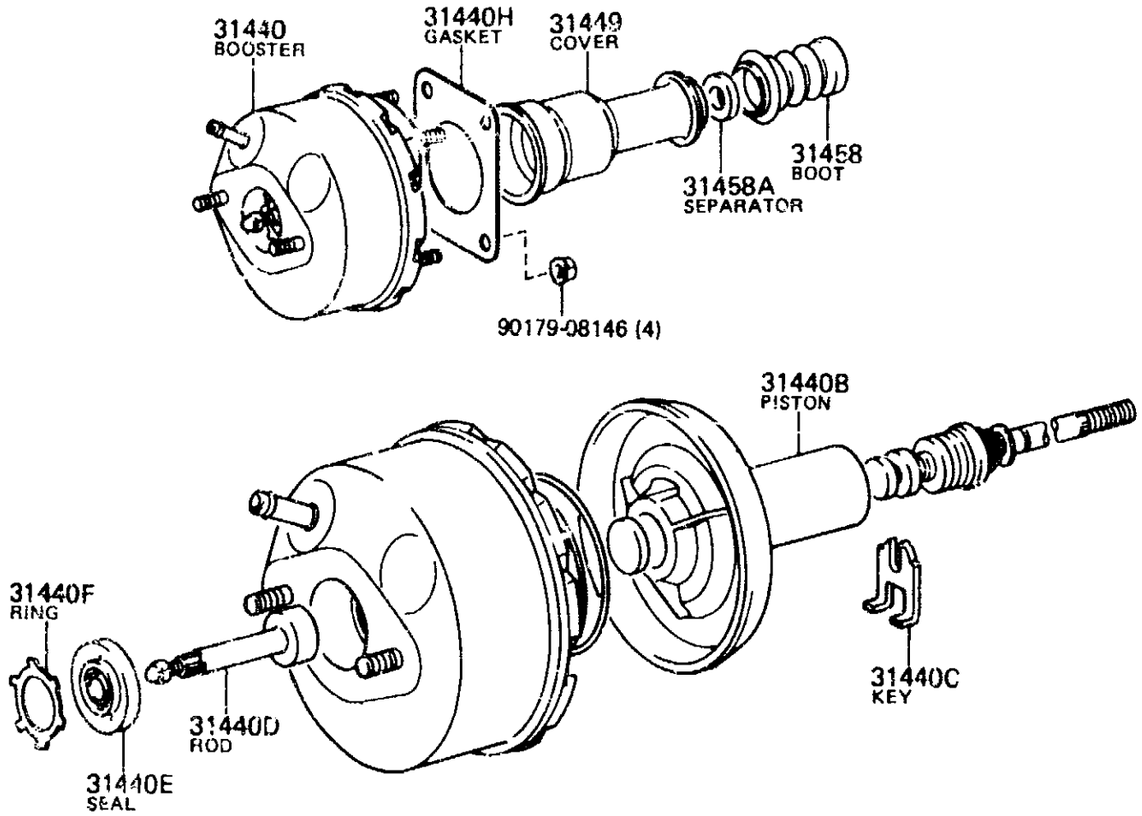

MC 8999

(8301-8510)BJ60

ILLUST•NO• 20F2

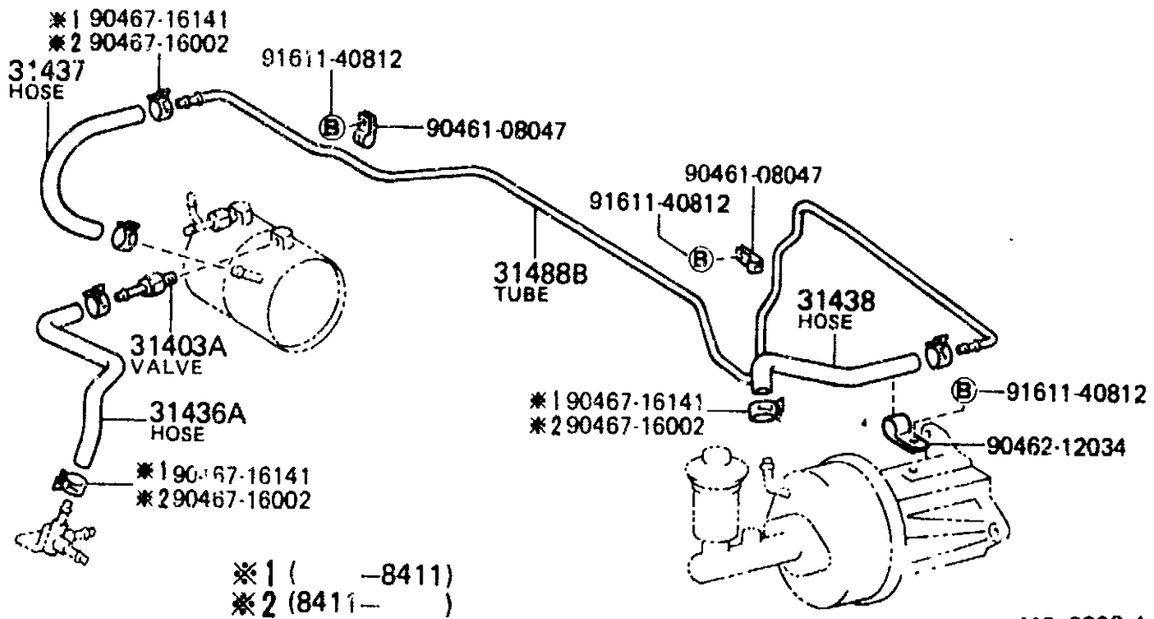

※1 (-8411)
※2 (8411-)

MC 9903-A

GENUINE TOYOTA PARTS

(8510-)HJ60••MTM

ILLUST•NO• 20F2

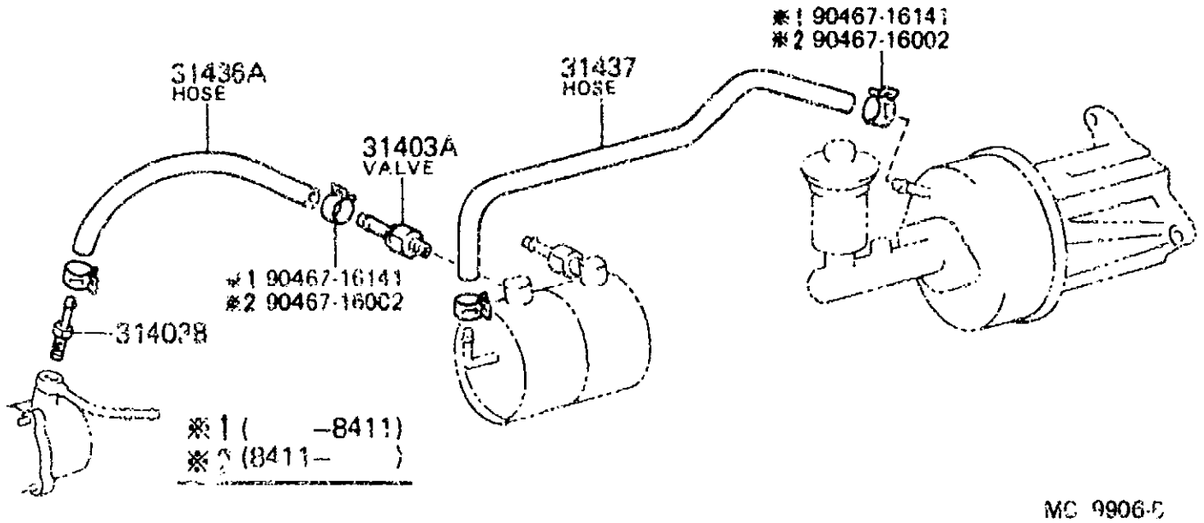

MC 9906-6

PROD.DATE	MODELS	DESCRIPTION	R/P	PART NUMBER	QTY	REV.REF.CODE FROM	REV.REF.CODE UP TO
FIG•	31-04 CLUTCH BOOSTER						
	31403A	VALVE ASSY, VACUUM CHECK (FOR CL H VACUUM)					
8301-	BJ60,HJ60••MTM			44730-60040-	1	483	
	31403B	UNION (FOR VACUUM PUMP)					
8510-	HJ60••MTM			90404-09008-	1	567	
	31436A	HOSE, NO•1 (FOR CLUTCH BOOSTER VACUUM)					
8301-8304	BJ60			# 90445-17034- (95441-09270-)	1	483	
8304-8510	BJ60			95441-09270-	1		566
8510-	HJ60••MTM			95441-09240-	1	567	
	31437	HOSE, NO•2 (FOR CLUTCH BOOSTER VACUUM)					
8301-8304	BJ60			# 90445-17034- (95441-09270-)	1	483	
8304-8510	BJ60			95441-09270-	1		566
8510-	HJ60••MTM			31438-60010-	1	567	
	31438	HOSE, NO•3 (FOR CLUTCH BOOSTER VACUUM)					
8301-8510	BJ60			31436-60020-	1	483	566
	31440	BOOSTER ASSY, CLUTCH W/AIR CLEANER					
8301-8411	BJ60			31440-60020-	1	483	514
8411-8510	BJ60			31440-60060-	1	515	566
8510-	HJ60••MTM			31440-60050-	1	567	
	31440B	PISTON, BOOSTER (FOR CLUTCH BOOSTER)					
8301-8411	BJ60			44642-60020-	1	483	514
8411-	BJ60,HJ60••MTM			44642-87502-	1	515	
	31440C	KEY, VALVE STOPPER (FOR CLUTCH BOOSTER)					
8301-8411	BJ60			44635-10010-	1	483	514
8411-	BJ60,HJ60••MTM			44635-12480-	1	515	
	31440D	ROD SUB-ASSY, BOOSTER PISTON (FOR CLUTCH BOOSTER)					
8301-8411	BJ60			44606-32010-	1	483	514

PROD.DATE	MODELS	DESCRIPTION	R/P	PART NUMBER	QTY	REV.REF.CODE FROM	REV.REF.CODE UP TO
	31440D ROD SUB-ASSY, BOOSTER PISTON (FOR CLUTCH BOOSTER) CONTINUED						
8411-	BJ60,HJ60..MTM			44606-12520-	1	515	
	31440E SEAL, BOOSTER BODY NO.1 (FOR CLUTCH BOOSTER)						
8301-	BJ60,HJ60..MTM			44621-28120-	1	483	
	31440F RING, CIRCULAR INTERNAL (FOR CLUTCH BOOSTER)						
8301-	BJ60,HJ60..MTM			44628-28120-	1	483	
	31440G RING, E (FOR CLUTCH BOOSTER AIR VALVE)						
8301-	BJ60,HJ60..MTM			96160-01000-	1	483	
	31440H GASKET, CLUTCH BOOSTER BRACKET						
8301-	BJ60,HJ60..MTM			44785-14010-	1	483	
	31440K BOOSTER KIT, CLUTCH						
8301-8411	BJ60			04318-60010-	1	483	514
8411-	BJ60,HJ60..MTM			04318-60030-	1	515	
	31449 COVER, CLUTCH BOOSTER PISTON						
8301-	BJ60,HJ60..MTM			31449-60010-	1	483	
	31458 BOOT, CLUTCH BOOSTER PISTON COVER						
8301-	BJ60,HJ60..MTM			31458-60010-	1	483	
	31458A SEPARATOR, AIR CLEANER (FOR CLUTCH BOOSTER)						
8301-	BJ60,HJ60..MTM			44672-22120-	1	483	
	31488B TUBE, VACUUM HOSE TO VACUUM HOSE						
8301-8510	BJ60			3148 -60030-	1	483	566

PROD.DATE	MODELS	DESCRIPTION	R/P	PART NUMBER	QTY	REV.REF.CODE FROM	REV.REF.CODE UP TO

(8008-8411)BJ60

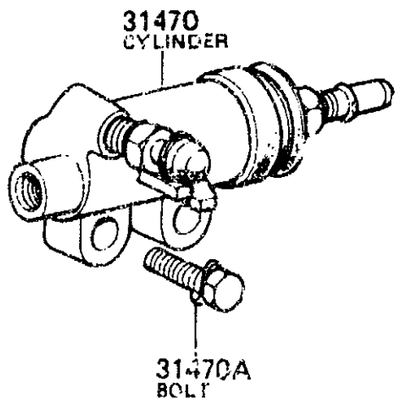

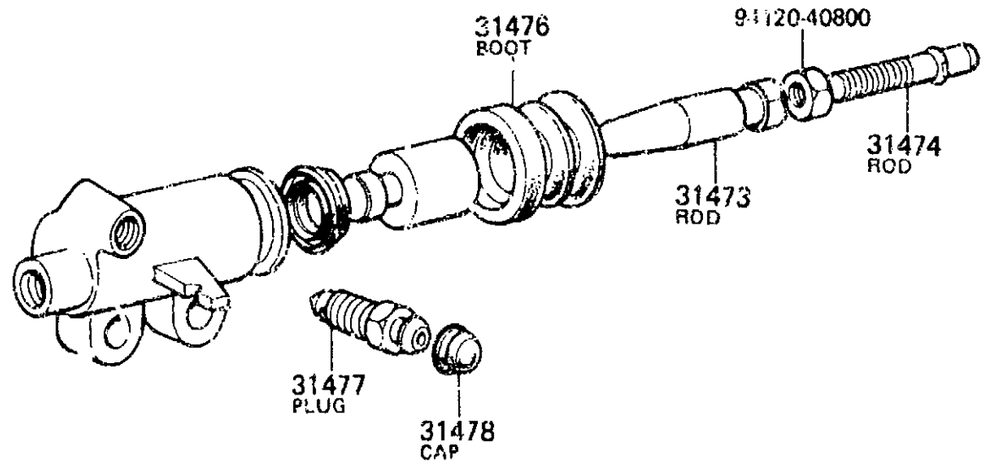

31470K
CYLINDER KIT

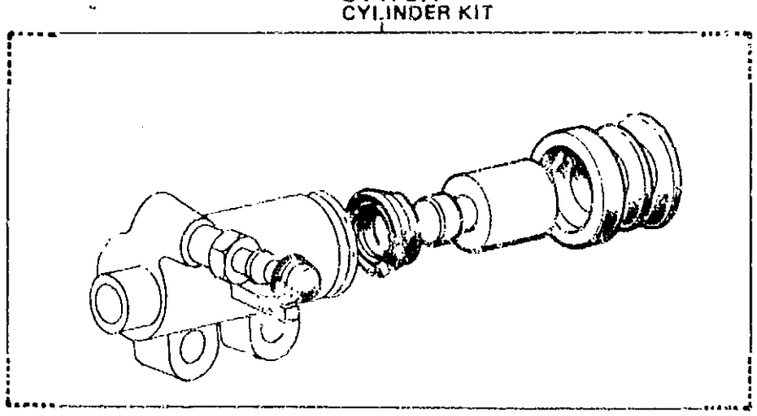

MC 2367 B

(8411-8510)BJ60

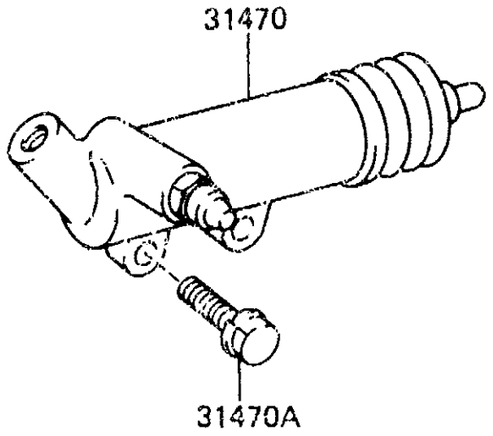

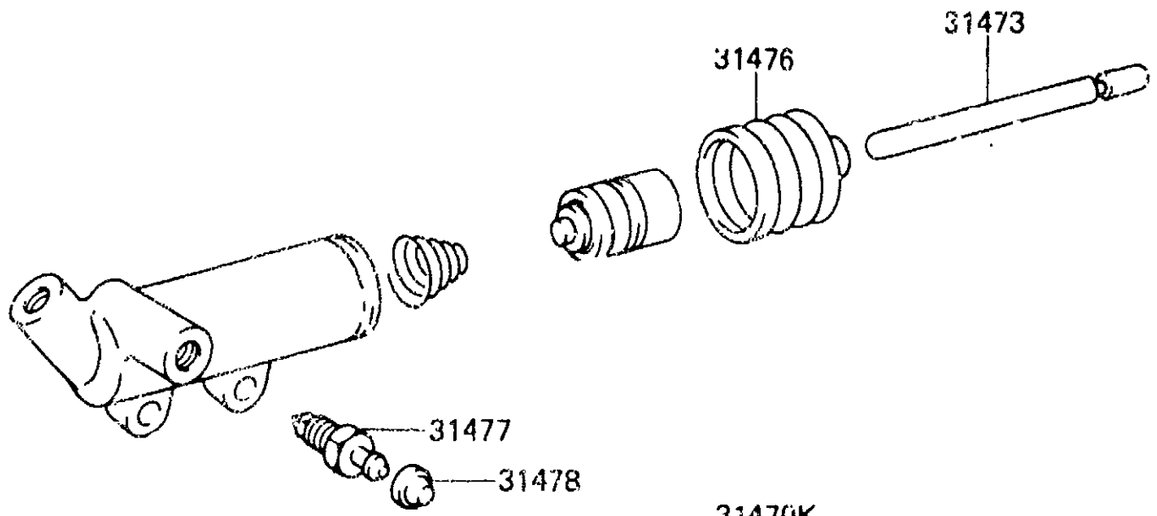

31470K

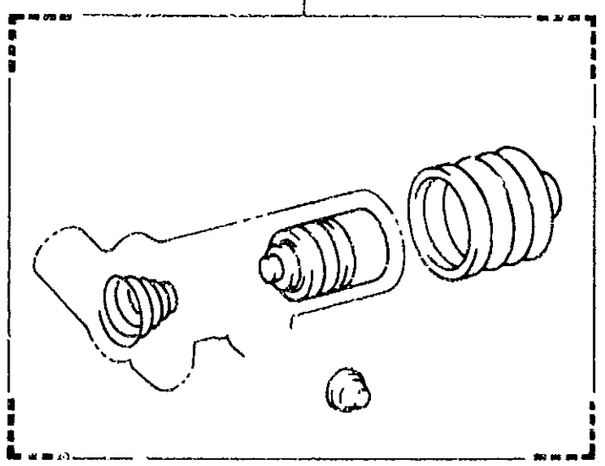

MC B684

MC2867B

MCB684

(8008-8504)FJ60

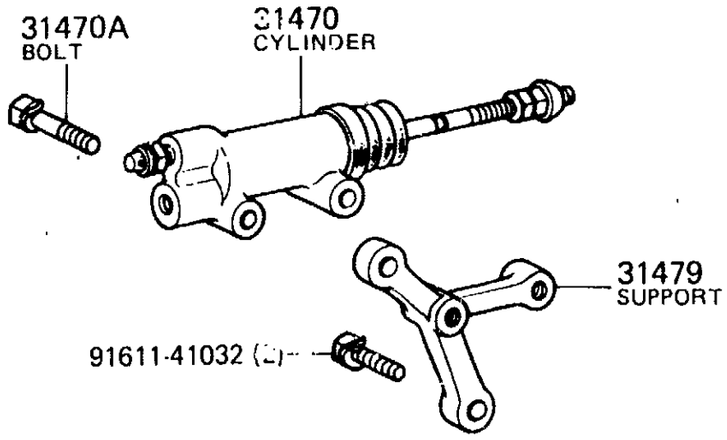

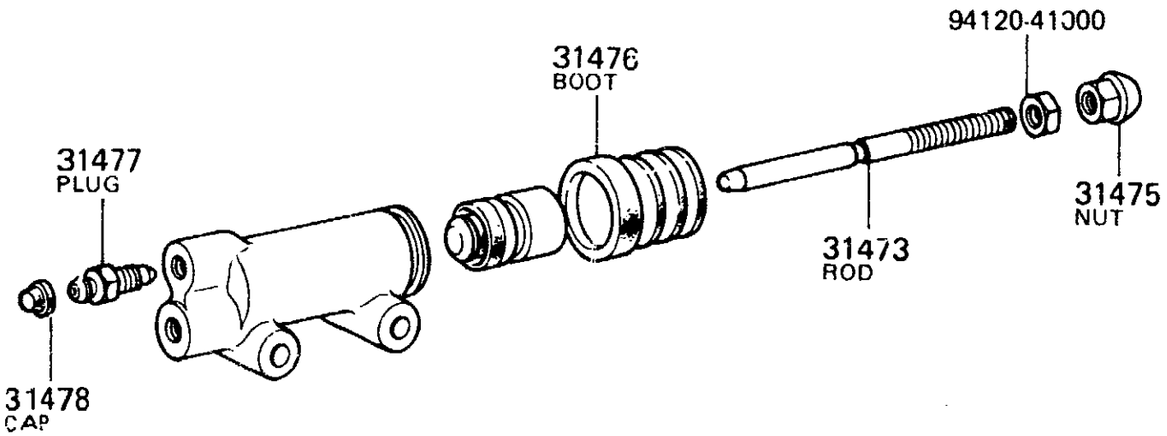

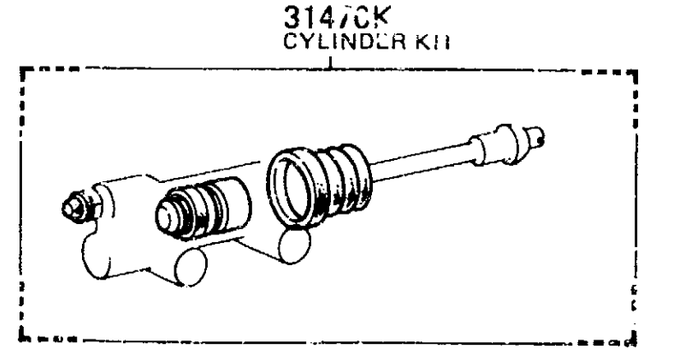

MC 7087A

(8504-)HJ60,FJ60

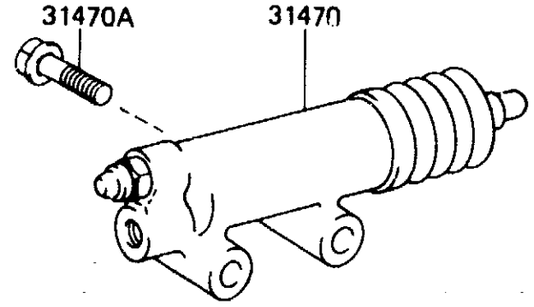

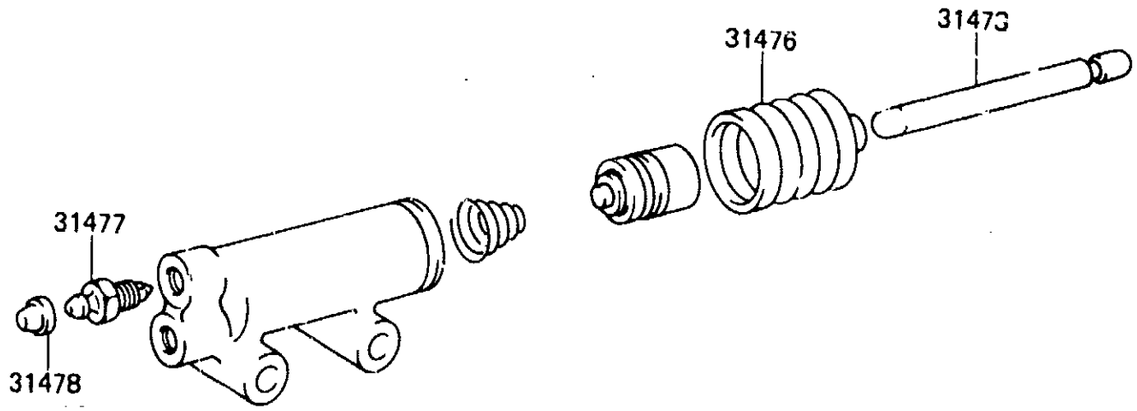

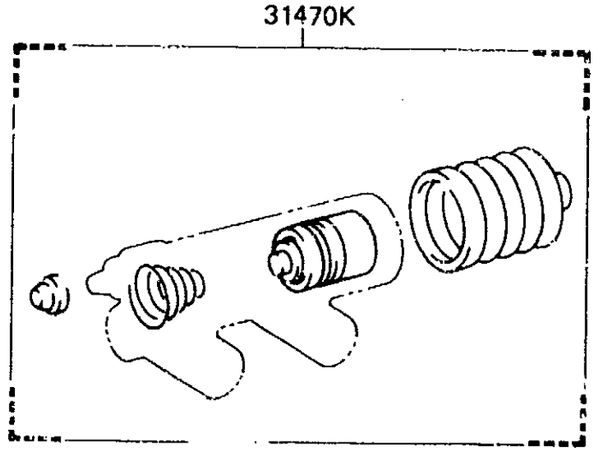

MC B685

GENUINE TOYOTA PARTS

PROD.DATE	MODELS	DESCRIPTION	R/P	PART NUMBER	QTY	REV.REF.CODE FROM	REV.REF.CODE UP TO
FIG•	31-05 CLUTCH RELEASE CYLINDER						
	31470 CYLINDER ASSY, CLUTCH RELEASE						
8008-8110	BJ60			31470-60050-	1	455	458
8110-8411	BJ60			31470-60110-	1	459	514
8411-8510	BJ60			31470-60120-	1	515	566
8008-8504	FJ60			31470-60081-	1	455	554
8504-	HJ60,FJ60••MTM			31470-60100-	1	555	
	31470A BOLT (FOR CLUTCH RELEASE CYLINDER SETTING)						
8008-8510	BJ60			91611-60828-	2	455	566
8008-	HJ60,FJ60••MTM			91611-61055-	2	455	
	31470K CYLINDER KIT, CLUTCH RELEASE						
8008-8110	BJ60			04313-40021-	1	455	458
8110-8411	BJ60			04313-60040-	1	459	514
8411-8510	BJ60			04313-60060-	1	515	566
8008-8504	FJ60			04313-60020-	1	455	554
8504-	HJ60,FJ60••MTM			04313-60050-	1	555	
	31473 ROD, CLUTCH RELEASE CYLINDER PUSH, NO.1						
8008-8110	BJ60			31473-30020-	1	455	458
8110-8411	BJ60			31473-60090-	1	459	514
8411-8510	BJ60			31473-60100-	1	515	566
8008-8504	FJ60			31473-60061-	1	455	554
8504-	HJ60,FJ60••MTM			31473-60080-	1	555	
	31474 ROD, CLUTCH RELEASE CYLINDER PUSH, NO.2						
8008-8411	BJ60			31474-30020-	1	455	514
	31475 NUT, CLUTCH RELEASE CYLINDER PUSH ROD						
8008-8504	FJ60			31475-60020-	1	455	554
	31476 BOOT, CLUTCH RELEASE CYLINDER						
8008-8110	BJ60			31476-40010-	1	455	458
8110-8411	BJ60			31476-60060-	1	459	514
	31476 BOOT, CLUTCH RELEASE CYLINDER CONTINUED						
8411-8510	BJ60			31476-60050-	1	515	566
8008-8504	FJ60			31476-60031-	1	455	554
8504-	HJ60,FJ60••MTM		※	31476-36010-	1	555	
	31477 PLUG, BLEEDER (FOR RELEASE CYLINDER)						
8008-	BJ60,HJ60,FJ60••MTM			47547-12010-	1	455	
	31478 CAP, BLEEDER PLUG (FOR RELEASE CYINDER)						
8008-	BJ60,HJ60,FJ60••MTM			31478-30010-	1	455	
	31479 SUPPORT, CLUTCH RELEASE CYLINDER						
8008-8504	FJ60			31479-60030-	1	455	554

FIG.33-01 TRANSAXLE OR TRANSMISSION ASSY & GASKET KIT (MTM)

2-C2

MR4-11-0420

(8008-)4F

33110
TRANSMISSION

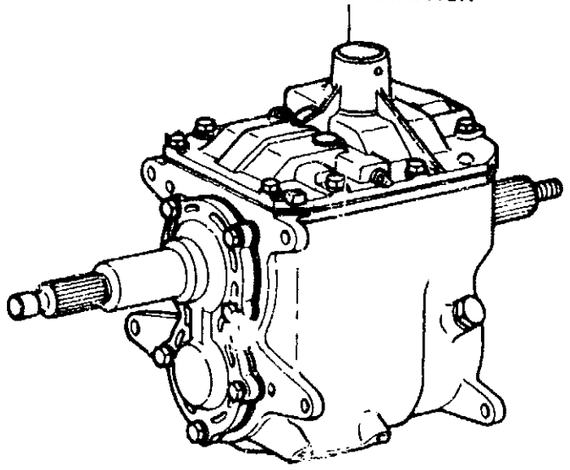

30000K
GASKET KIT

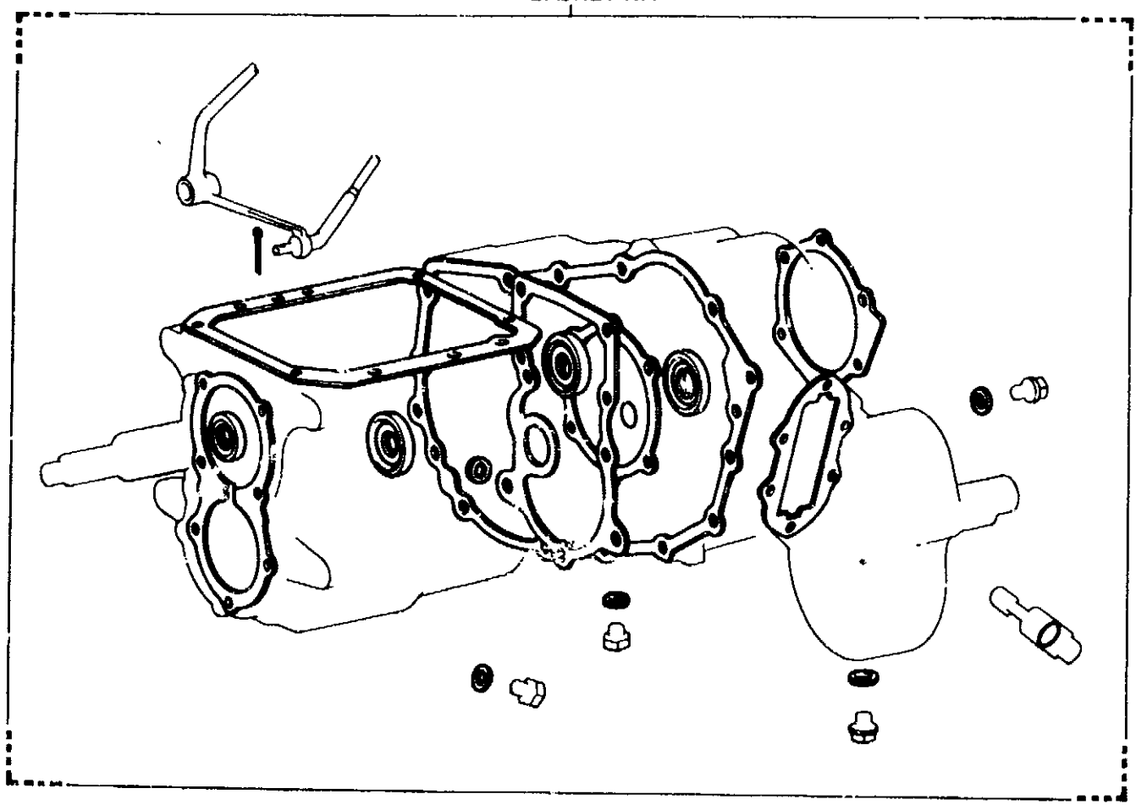

MC 7171-A

(8210-)5F

33110
TRANSMISSION

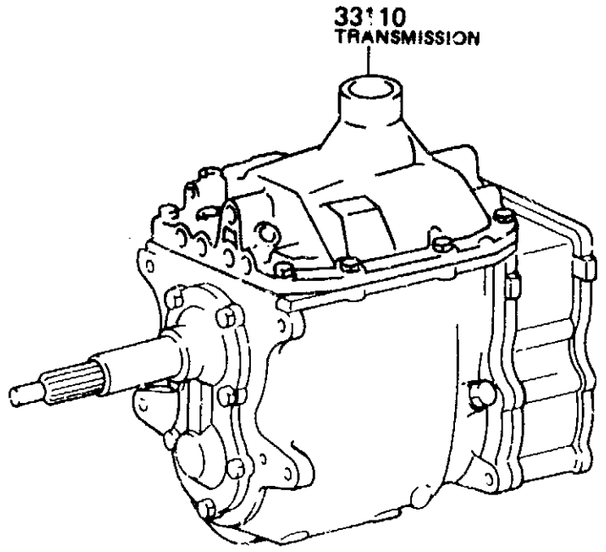

30000K
GASKET KIT

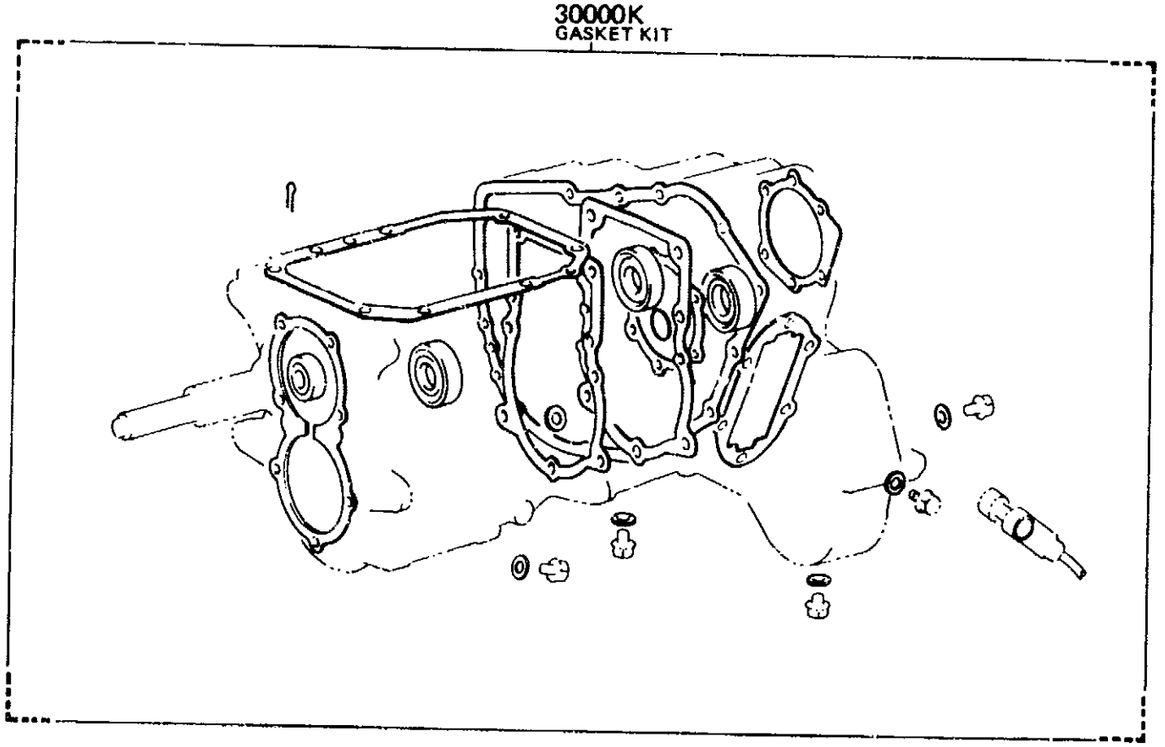

MC 9057-A

	PROD.DATE	MODELS	DESCRIPTION	R/P	PART NUMBER	QTY	REV.REF.CODE FROM	REV.REF.CODE UP TO
	FIG.	33-01 TRANSAXLE OR TRANSMISSION ASSY & GASKET KIT (MTM)						
		30000K GASKET KIT, MANUAL TRANSMISSION OVERHAUL						
	8210-8411	BJ60			04331-60060-	1	467	514
	8411-8510	BJ60			04331-60080-	1	515	566
	8008-8210	BJ60,FJ60			04331-60040-	1	455	466
	8210-	FJ60			04331-60041-	1	467	
	8510-	HJ60,,MTM			04331-60081-	1	567	
		33110 TRANSMISSION ASSY, MANUAL						
	8008-8201	BJ60			20-60901--	1	455	
	8201-8210	BJ60			33030-60310-	1		466
	8210-8411	BJ60		#	33030-60410- (33030-60620-)	1	467	514
	8411-8510	BJ60			33030-60620-	1	515	566
	8008-8208	FJ60			33030-60171-	1	455	474
	8208-8504	FJ60			33030-60172-	1	475	554
C	8504-8604	FJ60			33030-60300-	1	555	572
C	8604-	FJ60			33030-60670-	1	573	
	8510-	HJ60,,MTM			33030-60450-	1	567	

PROD.DATE	MODELS	DESCRIPTION	R/P	PART NUMBER	QTY	REV.REF.CODE FROM	REV.REF.CODE UP TO

FIG.33-02 CLUTCH HOUSING & TRANSMISSION CASE (MTM)

2-E2

(8008-8510)BJ60

※1 (-8210)
※2 (8210-)

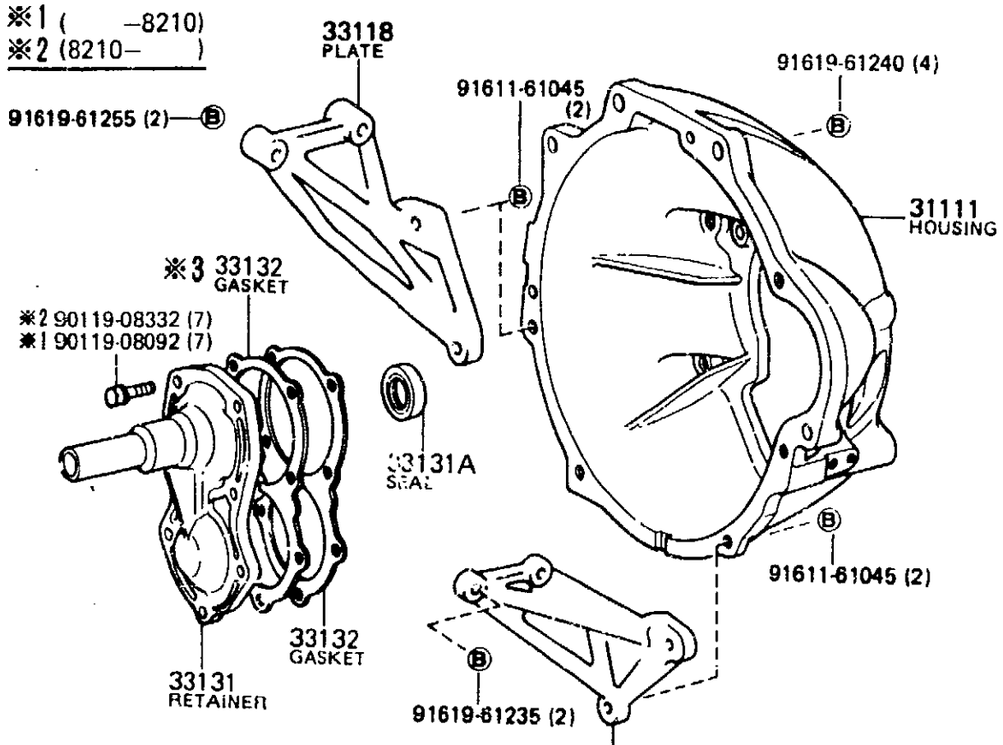

※3 4F
※4 5F

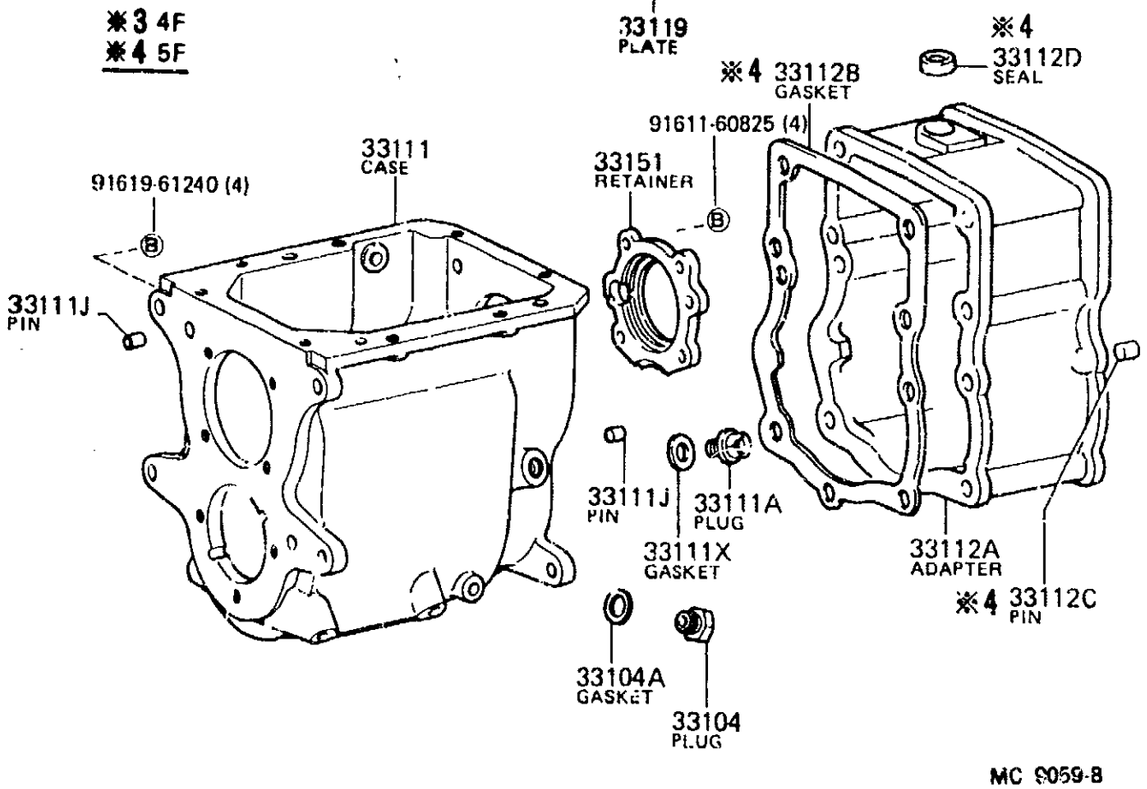

MC 9059-B

(8008-)FJ60

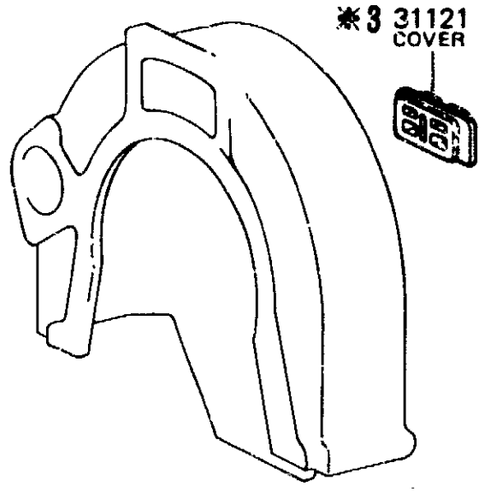

※1 (-8210)
※2 (8210-)
※3 (-8307)

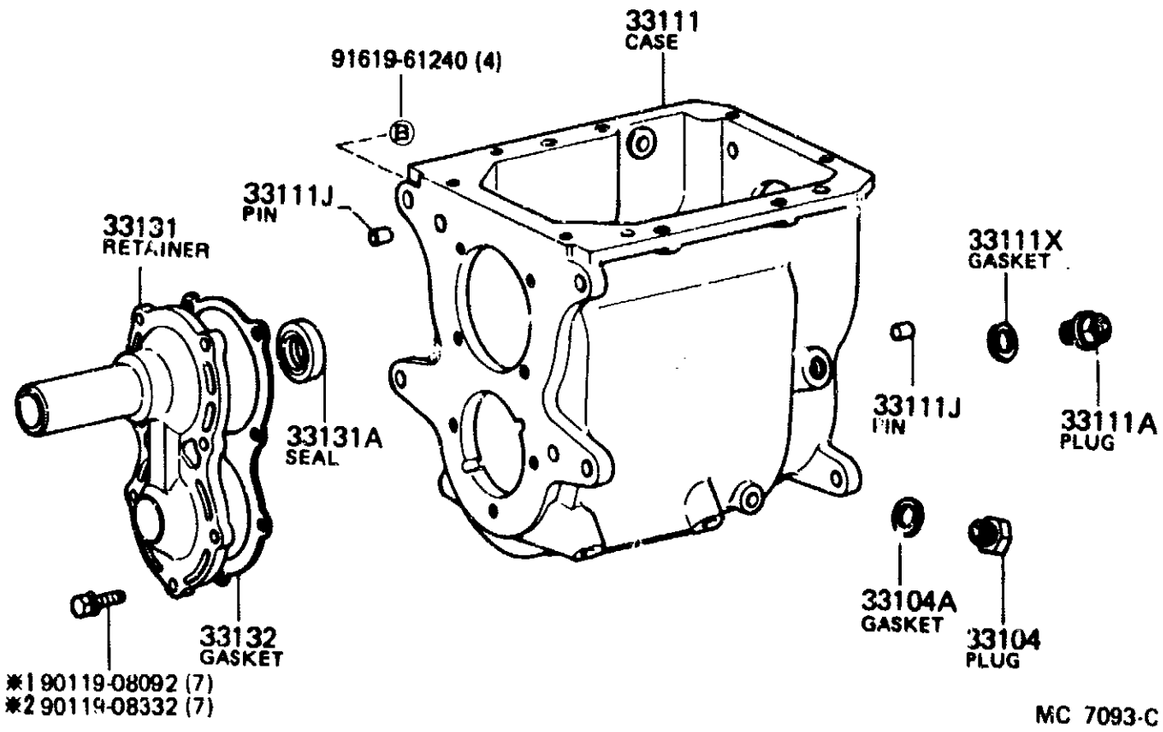

MC 7093-C

FIG. 33-02 CLUTCH HOUSING & TRANSMISSION CASE (MTM)

2-F2

(8510-)HJ60

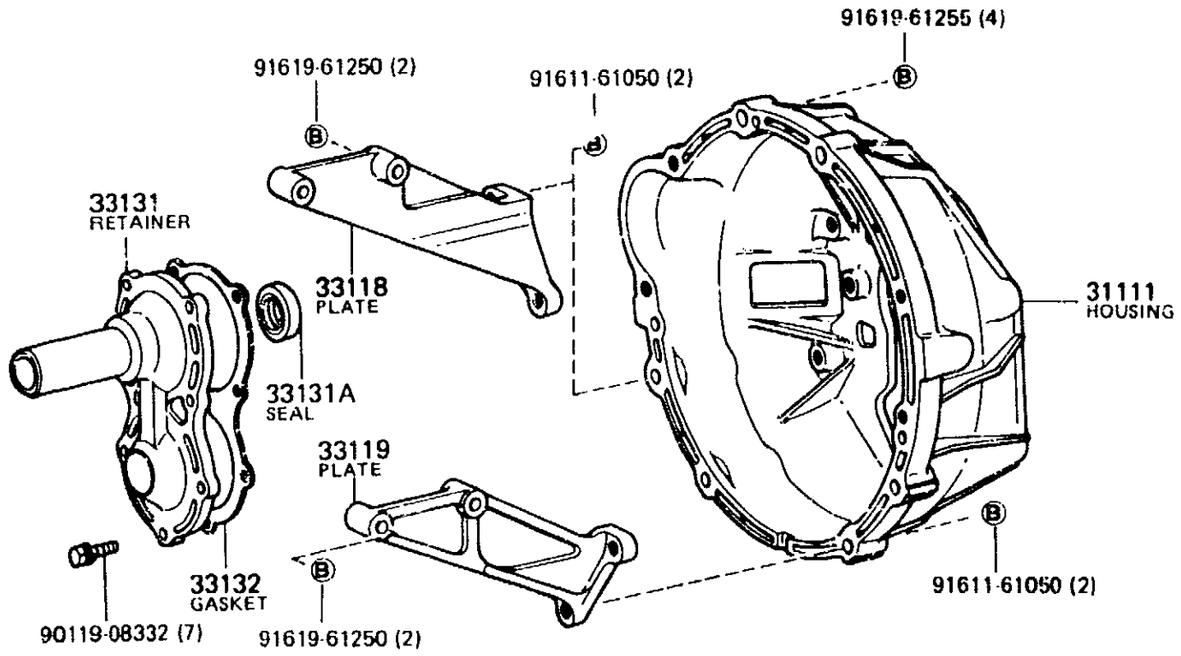

GENUINE TOYCTA PARTS

	PROD.DATE	MODELS	DESCRIPTION	R/P	PART NUMBER	QTY	REV.REF.CODE FROM	REV.REF.CODE UP TO
	FIG.	33-02 CLUTCH HOUSING & TRANSMISSION CASE (MTM)						
		31111 HOUSING, CLUTCH						
	8008-8110	BJ60			31111-60070-	1	455	458
	8008-8411	BJ60	W/TACHOMETER		31111-60050-	1	455	514
	8411-8505	BJ60	W/TACHOMETER	#	31111-60140- (31111-60190-)	1	515	
	8505-	BJ60	W/TACHOMETER		31111-60190-	1		
	8510-	HJ60..MTM	W/TACHOMETER		31111-60170-	1	567	
		31121 COVER, CLUTCH HOUSING, NO.1						
	8008-8307	FJ60			31121-60021-	1	455	
		33104 PLUG SUB-ASSY, DRAIN (MTM)						
	8008-	BJ60,HJ60,FJ60..MTM			90341-18057-	1	455	
		33104A GASKET, DRAIN PLUG (MTM)						
	8008-8109	BJ60,FJ60			12157-10010-	1	455	
	8109-8408	BJ60,FJ60			90430-18007-	1		
	8408-	BJ60,HJ60,FJ60..MTM			90430-18008-	1		
		33111 CASE, MANUAL TRANSMISSION						
	8210-8411	BJ60..5F			33111-60060-	1	467	514
	8411-8504	BJ60..5F			33111-60070-	1	515	554
C	8504-8604	BJ60,FJ60				1	555	572
	8008-8208	BJ60,FJ60..4F		#	33111-60040- (33111-60H00-)	1	455	474
	8208-8504	BJ60,FJ60..4F			33111-60041-	1	475	554
C	8604-	FJ60			33111-60080-	1	573	
	8510-	HJ60..MTM				1	567	
		33111A PLUG, MANUAL TRANSMISSION CASE						
	8008-8304	BJ60,FJ60			90341-18002-	1	455	
	8304-	BJ60,HJ60,FJ60..MTM			90341-18006-	1		

PROD.DATE	MODELS	DESCRIPTION	R/P	PART NUMBER	QTY	REV.REF.CODE FROM	REV.REF.CODE UP TO	
	33111J PIN, STRAIGHT (FOR MANUAL TRANSMISSION CASE)							
8210-	BJ60,HJ60..MTM	L=14,OD=10		90250-10214-	1	467		C
8008-	BJ60,HJ60,FJ60..MTM	L=17,OD=12		90250-12146-	2	455		C
8008-	BJ60,HJ60,FJ60..MTM	L=14,OD=12		90250-12216-	1	455		
	33111X GASKET, TRANSMISSION CASE PLUG							
8008-8109	BJ60,FJ60			12157-10010-	1	455		C
8109-8408	BJ60,FJ60			90430-18007-	1			C
8408-	BJ60..J60,FJ60..MTM			90430-18008-	1			C
	33112A ADAPTER, TRANSFER							
8210-	BJ60,HJ60..MTM			36117-60020-	1	467		C
8504-	FJ60			36117-60030-	1	555		C
	33112B GASKET, TRANSFER ADAPTER							
8210-8504	BJ60			33142-60020-	1	467	554	
8504-	BJ60,HJ60,FJ60..MTM				1	555		
	33112C PIN, STRAIGHT (FOR TRANSFER ADAPTER)							
8210-8504	BJ60			90250-12216-	2	467	554	
8504-	BJ60,HJ60,FJ60..MTM				2	555		
	33112D SEAL, OIL (FOR TRANSFER ADAPTER)							
8210-8504	BJ60			90312-17001-	1	467	554	
8504-	BJ60,HJ60,FJ60..MTM				1	555		
	33118 PLATE, STIFFENER, RH (MTM)							
8411-8510	BJ60			33118-36020-	1	515	566	
8510-	HJ60..MTM			33118-60010-	1	567		
	33119 PLATE, STIFFENER, LH (MTM)							
8411-8510	BJ60			33119-36020-	1	515	566	
8510-	HJ60..MTM			33119-60010-	1	567		
	33131 RETAINER, BEARING, FRONT (MTM)							
8008-8510	BJ60			33131-60030-	1	455	566	

GENUINE TOYOTA PARTS

PROD.DATE	MODELS	DESCRIPTION	R/P	PART NUMBER	QTY	REV.REF.CODE FROM	REV.REF.CODE UP TO	
	33131 RETAINER, BEARING, FRONT (MTM) CONTINUED							
8008-8604	FJ60			33131-60020-	1	455	572	
8604-	FJ60			33131-60040-	1	573		
8510-	HJ60..MTM				1	567		
	33131A SEAL, OIL (FOR TRANSMISSION FRONT BEARING RETAINER)							
8008-8604	BJ60,FJ60			90311-28004-	1	455	572	
8604-	FJ60			90311-32013-	1	573		
8510-	HJ60..MTM				1	567		
	33132 GASKET, FRONT BEARING RETAINER (MTM)							
8008-8604	BJ60,FJ60			33132-36010-	2	455	572	
8604-	FJ60			33132-60020-	1	573		
8510-	HJ60..MTM				1	567		
	33151 RETAINER, OUTPUT SHAFT REAR BEARING (MTM)							
8210-	BJ60,HJ60..MTM			33151-60010-	1	467		

FIG. 33-04 SPEEDOMETER DRIVEN GEAR (MTM)

2-H2

GENUINE TOYOTA PARTS

(8008-)

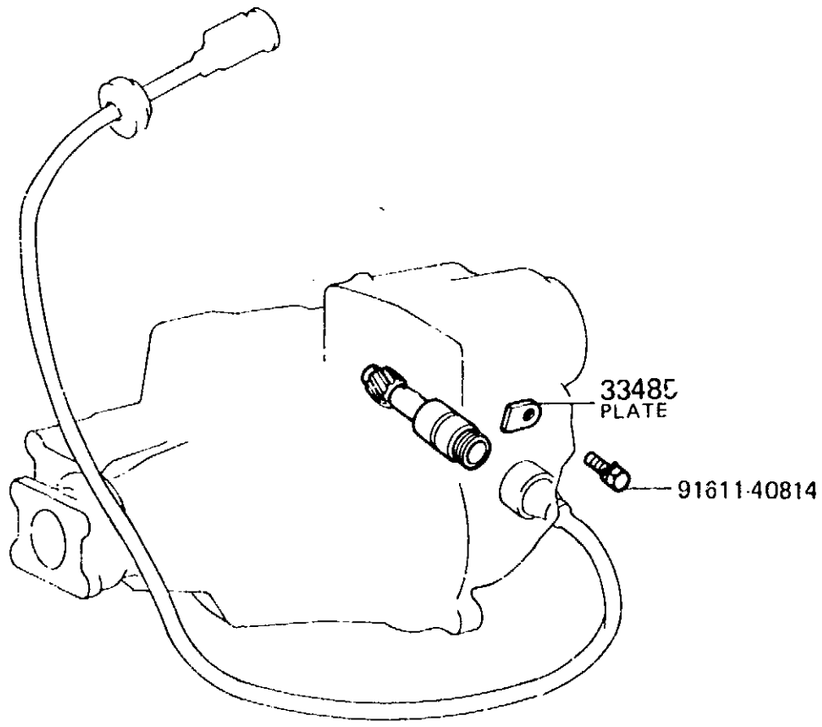

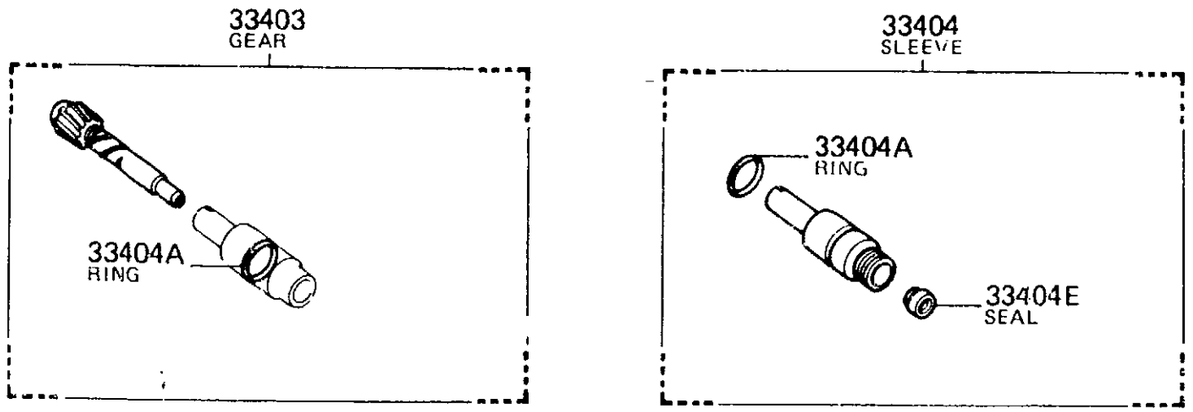

MC 7094

PROD.DATE	MODELS	DESCRIPTION	R/P	PART NUMBER	QTY	REV.REF.CODE FROM	REV.REF.CODE UP TO
FIG.	33-04 SPEEDOMETER DRIVEN GEAR (MTM)						
	33403 GEAR SUB-ASSY, SPEEDOMETER DRIVEN (MTM)						
8008-	BJ60,HJ60,FJ60..MTM	N=16		33403-69075-	1	455	
	33404 SLEEVE SUB-ASSY, SPEEDOMETER SHAFT (MTM)						
8008-	BJ60,HJ60,FJ60..MTM			33404-30040-	1	455	
	33404A RING, O (FOR MTM SPEEDOMETER SHAFT SLEEVE)						
8008-	BJ60,HJ60,FJ60..MTM			90301-18018-	1	455	
	33404E SEAL, TYPE S OIL (FOR SPEEDOMETER SHAFT SLEEVE)						
8008-	BJ60,HJ60,FJ60..MTM			90310-09001-	1	455	
	33485 PLATE, SPEEDOMETER SLEEVE LOCK (MTM)						
8008-	BJ60,HJ60,FJ60..MTM			33485-30020-	1	455	

FIG.33-05 TRANSMISSION GEAR (MTM)

2-I2

MR4-11-0422

(8008-8510)4F

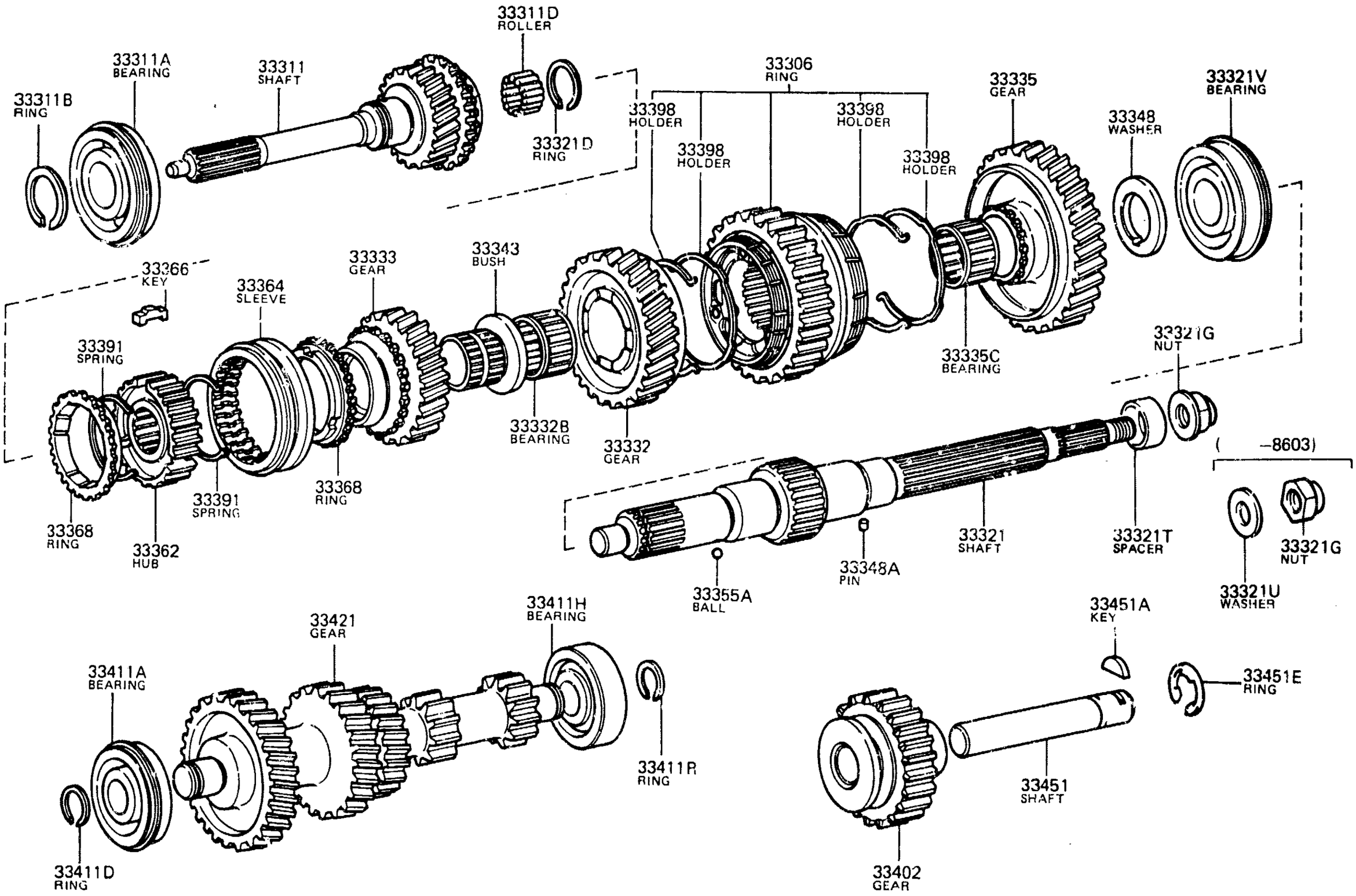

MC C055-B

MCC055B

FIG.33-05 TRANSMISSION GEAR (MTM)

2-J2

MR4-11-0423

(8210-)5F

33311D ROLLER
33311A BEARING
33311 SHAFT
33311B RING
33321D RING
33306 RING
33398 HOLDER
33398 HOLDER
33398 HOLDER
33398 HOLDER
33335 GEAR
33348 WASHER
33321V BEARING
33366 KEY
33364 SLEEVE
33333 GEAR
33343 BUSH
33335C BEARING
33321G NUT
33391 SPRING
33332B BEARING
33332 GEAR
33336 GEAR
33368 RING
33321 SHAFT
33391 SPRING
33368 RING
33362 HUB
33321T SPACER
33321A BEARING
(-8603)
33377 KEY
33369 RING
33376 SPRING
33321U WASHER
33321G NUT
33348A PIN
33355A BALL
33349C PIN
33428B BEARING
33411A BEARING
33411D RING
33421 GEAR
33411E NUT
33451A KEY
33318 PIECE
33402 GEAR
33411H BEARING
33349 WASHER
33428 GEAR
33395 SLEEVE
33451 SHAFT
33451E RING

MC 9030-B

MC9039A

	PROD.DATE	MODELS	DESCRIPTION	R/P	PART NUMBER	QTY	REV.REF.CODE FROM	REV.REF.CODE UP TO
	FIG.	33-05 TRANSMISSION GEAR (MTM)						
		33306 RING SUB-ASSY, SYNCHRONIZER, NO.1						
	8008-8207	BJ60,FJ60			33306-36016-	1	455	
	8207-	BJ60,HJ60,FJ60..MTM			33306-36020-	1		
		33311 SHAFT, INPUT						
	8008-8210	BJ60			33311-60060-	1	455	466
	8210-8510	BJ60			33311-60080-	1	467	566
C	8008-8604	FJ60			33311-60041-	1	455	572
C	8604-	FJ60			33311-60130-	1	573	
	8510-	HJ60..MTM			33311-60120-	1	567	
		33311A BEARING (FOR INPUT SHAFT FRONT)						
	8210-8510	BJ60..5F			90365-40002-	1	467	566
C	8008-8604	BJ60,FJ60..4F			97154-06308-	1	455	572
C	8604-	FJ60			90363-40035-	1	573	
	8510-	HJ60..MTM				1	567	
		33311B RING, SHAFT SNAP (FOR FRONT BEARING)						
	8008-	BJ60,HJ60,FJ60..MTM	T=3.31-3.42		90520-36015-	1	455	
	8008-	BJ60,HJ60,FJ60..MTM	T=3.20-3.31		90520-36016-	1	455	
		33311D ROLLER OR BEARING, INPUT SHAFT NEEDLE						
	8008-	BJ60,HJ60,FJ60..MTM			90361-06049-	17	455	
		33318 PIECE, GEAR SPLINE, NO.5						
	8210-	BJ60,HJ60..MTM			33318-36012-	1	467	
		33321 SHAFT, OUTPUT						
	8008-8504	BJ60,FJ60..4F			33321-60051-	1	455	554
	8210-	BJ60,HJ60..5F			33321-60070-	1	467	
	8504-	FJ60			33321-60080-	1	555	

	PROD.DATE	MODELS	DESCRIPTION	R/P	PART NUMBER	QTY	REV.REF.CODE FROM	REV.REF.CODE UP TO
		33321A BEARING (FOR OUTPUT SHAFT REAR)						
	8210-8504	BJ60..5F			# 90363-35017- (90363-35022-)	1	467	554
C	8504-8604	BJ60,FJ60				1	555	572
C	8604-	FJ60			90363-35022-	1	573	
	8510-	HJ60..MTM				1	567	
		33321D RING, SHAFT SNAP (FOR CLUTCH HUB SET)						
	8008-	BJ60,HJ60,FJ60..MTM	T=2.40-2.45		90520-36250-	1	455	
	8008-	BJ60,HJ60,FJ60..MTM	T=2.45-2.50		90520-36251-	1	455	
	8008-	BJ60,HJ60,FJ60..MTM	T=2.50-2.55		90520-36252-	1	455	
	8008-	BJ60,HJ60,FJ60..MTM	T=2.55-2.60		90520-36253-	1	455	
	8008-	BJ60,HJ60,FJ60..MTM	T=2.60-2.65		90520-36254-	1	455	
	8008-	BJ60,HJ60,FJ60..MTM	T=2.65-2.70		90520-36255-	1	455	
		33321G NUT (FOR MANUAL TRANSMISSION OUTPUT SHAFT REAR SET)						
C	8008-8603	BJ60,HJ60,FJ60..MTM			90179-26002-	1	455	
C	8603-	HJ60,FJ60..MTM			90179-26004-	1		
		33321T SPACER (FOR OUTPUT SHAFT)						
	8210-	BJ60,HJ60..MTM			90560-36001-	1	467	
C	8210-8504	FJ60			90560-35007-	1	467	554
C	8504-	FJ60			90560-39001-	1	555	
		33321U WASHER (FOR MANUAL TRANSMISSION OUTPUT SHAFT SET)						
C	8008-8603	BJ60,HJ60,FJ60..MTM			90201-26003-	1	455	
		33321V BEARING (FOR OUTPUT SHAFT CENTER)						
	8008-	BJ60,FJ60..4F			97154-06308-	1	455	
	8210-	BJ60,HJ60..5F			90363-40018-	1	467	
		33332 GEAR, 2ND						
	8008-	BJ60,FJ60..4F			33332-36012-	1	455	

GENUINE TOYOTA PARTS

PROD.DATE	MODELS	DESCRIPTION	R/P	PART NUMBER	QTY	REV.REF.CODE FROM	REV.REF.CODE UP TO
	33332 GEAR, 2ND CONTINUED						
8210-	BJ60,HJ60..5F			33332-60020-	1	467	
	33332B BEARING, NEEDLE ROLLER (FOR 2ND GEAR)						
8008-	BJ60,HJ60,FJ60..MTM			90364-44065-	1	455	
	33333 GEAR, 3RD						
8008-	BJ60,FJ60..4F			33333-60020-	1	455	
8210-	BJ60,HJ60..5F			33333-60020-	1	467	
	33335 GEAR, 1ST						
8008-	BJ60,FJ60..4F			33335-60011-	1	455	
8210-	BJ60,HJ60..5F			33335-60020-	1	467	
	33335C BEARING (FOR 1ST GEAR NEEDLE)						
8008-	BJ60,HJ60,FJ60..MTM			90364-44065-	1	455	
	33336 GEAR, 5TH						
8210-	BJ60,HJ60..MTM			33336-60010-	1	467	
	33343 BUSH, 3RD & 2ND GEAR						
8008-	BJ60,HJ60,FJ60..MTM			33343-36020-	1	455	
	33348 WASHER, 1ST GEAR THRUST						
8008-	BJ60,HJ60,FJ60..MTM			33348-36012-	1	455	
	33348A PIN OR BALL (FOR 1ST GEAR THRUST WASHER)						
8008-	BJ60,HJ60,FJ60..MTM			90250-05202-	1	455	
	33349 WASHER, 5TH GEAR THRUST						
8210-	BJ60,HJ60..MTM			33346-36010-	1	467	
	33349C PIN (FOR 5TH GEAR THRUST WASHER)						
8210-	BJ60,HJ60..MTM			90250-06009-	1	467	
	33355A KEY OR BALL, 1ST GEAR BEARING INNER RACE LOCK						
8008-	BJ60,HJ60,FJ60..MTM			90360-06004-	1	455	

PROD.DATE	MODELS	DESCRIPTION	R/P	PART NUMBER	QTY	REV.REF.CODE FROM	REV.REF.CODE UP TO
	33362 HUB, TRANSMISSION CLUTCH, NO.2						
8008-	BJ60,HJ60,FJ60..MTM			33362-36021-	1	455	
	33364 SLEEVE, TRANSMISSION HUB, NO.2						
8008-	BJ60,HJ60,FJ60..MTM			33364-36051-	1	455	
	33366 KEY, SYNCHROMESH SHIFTING, NO.2						
8008-	BJ60,HJ60,FJ60..MTM			33366-36020-	3	455	
	33368 RING, SYNCHRONIZER, NO.2						
8008-	BJ60,HJ60,FJ60..MTM			33368-20012-	2	455	
	33369 RING, SYNCHRONIZER, NO.3						
8210-	BJ60,HJ60..MTM			33368-20012-	1	467	
	33376 RING, SYNCHROMESH SHIFTING KEY (FOR NO.3 CLUTCH HUB)						
8210-	BJ60,HJ60..MTM			33391-36010-	2	467	
	33377 KEY, SYNCHROMESH SHIFTING (FOR NO.3 CLUTCH HUB)						
8210-	BJ60,HJ60..MTM			33394-36011-	3	467	
	33391 SPRING, SYNCHROMESH SHIFTING KEY, NO.2						
8008-	BJ60,HJ60..MTM			33371-20010-	2	455	
	33395 SLEEVE, TRANSMISSION HUB, NO.3						
8210-	BJ60,HJ60..MTM			33395-36010-	1	467	
	33398 HOLDER, SYNCHRONIZER RING						
8008-8204	BJ60,FJ60			# 33398-36011- (33398-36012-)	4	455	
8204-	BJ60,HJ60,FJ60..MTM			33398-36012-	4		
	33402 GEAR SUB-ASSY, REVERSE IDLER						
8008-8204	BJ60,FJ60			33402-36021-	1	455	470
C 8204-8604	BJ60,FJ60			33402-36050-	1	471	572
C 8604-	FJ60			33402-60020-	1	573	
8510-	HJ60..MTM				1	567	

	PROD.DATE	MODELS	DESCRIPTION	R/P	PART NUMBER	QTY	REV.REF.CODE FROM	REV.REF.CODE UP TO
		33411A BEARING OR ROLLER (FOR COUNTER GEAR FRONT)						
	8008-	BJ60,FJ60..4F			97153-06332-	1	455	
	8210-	BJ60,HJ60..5F			90365-32002-	1	467	
		33411D RING, COUNTER GEAR FRONT BEARING SNAP, NO.1						
	8008-	BJ60,HJ60,FJ60..MTM	T=2.05-2.10		90520-30214-	1	455	
	8008-	BJ60,HJ60,FJ60..MTM	T=2.15-2.20		90520-30216-	1	455	
	8008-	BJ60,HJ60,FJ60..MTM	T=2.25-2.30		90520-30218-	1	455	
		33411E NUT (FOR COUNTER GEAR SHAFT)						
	8210-	BJ60,HJ60..MTM			90179-26002-	1	467	
		33411H BEARING OR ROLLER (FOR COUNTER GEAR REAR)						
	8008-	BJ60,FJ60..4F			90365-32010-	1	455	
	8210-	BJ60,HJ60..5F			90365-40001-	1	467	
		33411R RING, SNAP, COUNTER GEAR REAR BEARING						
	8008-	BJ60,FJ60..4F			90520-29099-	1	455	
		33421 GEAR, COUNTER						
	8210-8510	BJ60..5F			33421-36040-	1	467	566
	8008-8204	BJ60,FJ60			33411-60041-	1	455	470
C	8204-8604	BJ60,FJ60..4F			33411-60042-	1	471	372
C	8604-	FJ60			33411-60070-	1	573	
	8510-	HJ60..MTM			33421-60060-	1	567	
		33426 GEAR, COUNTERSHAFT 5TH						
	8210-	BJ60,HJ60..MTM			33046-60010-	1	467	
		33428B BEARING (FOR COUNTER 5TH GEAR)						
	8210-	BJ60,HJ60..MTM			90364-32007-	1	467	
		33451 SHAFT, REVERSE IDLER GEAR						
	8008-	BJ60,HJ60,FJ60..MTM			33451-36022-	1	455	

PROD.DATE	MODELS	DESCRIPTION	R/P	PART NUMBER	QTY	REV.REF.CODE FROM	REV.REF.CODE UP TO
	33451A KEY, WOODRUFF (FOR REVERSE IDLER GEAR SHAFT)						
8008-8210	BJ60,FJ60			95161-10322-	1	455	466
8210-	BJ60,HJ60,FJ60..MTM			90280-03015-	1	467	

FIG.33-07 GEAR SHIFT FORK & LEVER SHAFT (MTM)

2-A3

(8008-8510)4F

(8210-)5F

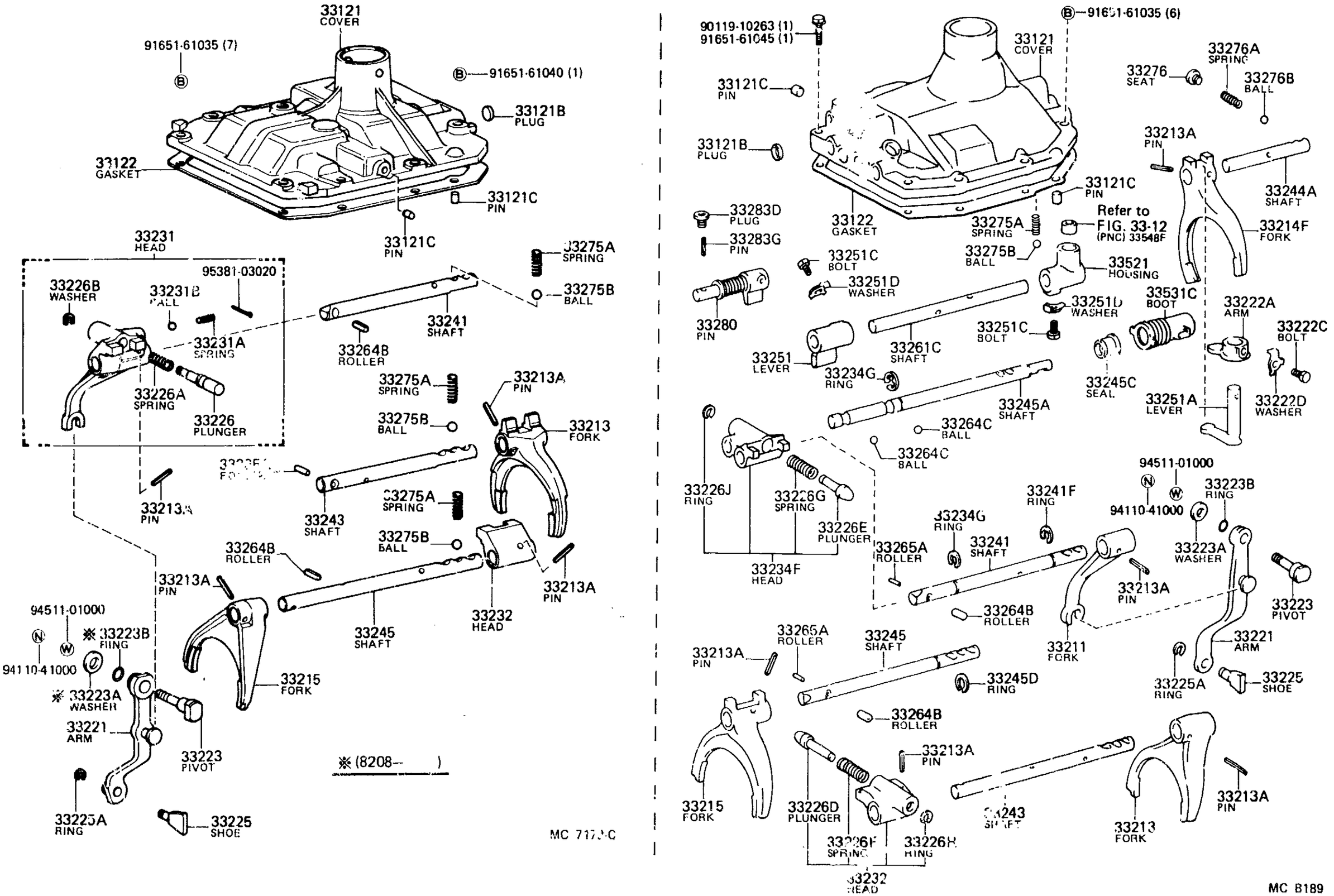

PROD.DATE	MODELS	DESCRIPTION	R/P	PART NUMBER	QTY	REV.REF.CODE FROM	REV.REF.CODE UP TO
FIG.	33-07 GEAR SHIFT FORK & LEVER SHAFT (MTM)						
	33121 COVER, MANUAL TRANSMISSION CASE						
8008-	BJ60,FJ60..4F			33102-60060-	1	455	
8210-	BJ60,HJ60..5F			33102-60080-	1	467	
	33121B PLUG, EXPANSION OR TIGHT (FOR TRANSMISSION CASE COVER)						
8210-	BJ60,HJ60..MTM	OD=12		90331-12002-	1	467	
8210-	BJ60,HJ60..MTM	OD=18		90331-18001-	2	467	
8008-	BJ60,HJ60,FJ60..MTM	OD=16		90331-16050-	7	455	
	33121C PIN (FOR TRANSMISSION CASE COVER)						
8008-	BJ60,HJ60,FJ60..MTM	L=14,OD=10		90250-10214-	2	455	
8008-	BJ60,HJ60,FJ60..MTM	L=8,OD=9.67		90250-10215-	1	455	
	33122 GASKET, MANUAL TRANSMISSION CASE COVER						
8008-8504	BJ60,FJ60..4F			33122-36011-	1	455	554
8210-	BJ60,HJ60..5F			33122-60010-	1	467	
8504-	FJ60				1	555	
	33211 FORK, REVERSE SHIFT						
8210-	BJ60,HJ60..MTM			33211-36011-	1	467	
	33213 FORK, 1ST & 2ND SHIFT						
8008-	BJ60,FJ60..4F			33212-60030-	1	455	
8210-	BJ60,HJ60..5F			33212-36020-	1	467	
	33213A PIN, SLOTTED SPRING (FOR SHIFT FORK SET)						
8008-	BJ60,HJ60,FJ60..MTM			90254-05016-	5	455	
	33214F FORK, 5TH SHIFT						
8210-	BJ60,HJ60..MTM			33214-60021-	1	467	
	33215 FORK, 3RD & 4TH SHIFT						
8008-	BJ60,FJ60..4F			33213-60040-	1	455	
8210-	BJ60,HJ60..5F			33213-60050-	1	467	

PROD.DATE	MODELS	DESCRIPTION	R/P	PART NUMBER	QTY	REV.REF.CODE FROM	REV.REF.CODE UP TO
	33221 ARM, REVERSE SHIFT						
8008-	BJ60,HJ60,FJ60..MTM			33201-36030-	1	455	
	33222A ARM, 5TH SHIFT						
8210-	BJ60,HJ60..MTM			33222-36030-	1	467	
	33222C BOLT (FOR 5TH SHIFT ARM)						
8210-	BJ60,HJ60..MTM			90113-08001-	1	467	
	33222D WASHER (FOR 5TH SHIFT ARM)						
8210-	BJ60,HJ60..MTM			90215-09003-	1	467	
	33223 PIVOT, SHIFT ARM						
8008-8208	BJ60,FJ60			# 33223-36010- (33223-36020-)	1	455	474
8208-	BJ60,HJ60,FJ60..MTM			33223-36020-	1	475	
	33223A WASHER (FOR SHIFT ARM PIVOT)						
8208-8408	BJ60,FJ60			# 90201-10045- (90201-10092-)	1	475	
8408-	BJ60,HJ60,FJ60..MTM			90201-10092-	1		
	33223B RING, O (FOR SHIFT ARM PIVOT)						
8208-	BJ60,HJ60,FJ60..MTM			96711-19010-	1	475	
	33225 SHOE, SHIFT ARM						
8008-	BJ60,HJ60,FJ60..MTM			33225-36030-	1	455	
	33225A RING, SHAFT SNAP (FOR SHIFT ARM SHOE)						
8008-	BJ60,HJ60,FJ60..MTM			90520-08098-	1	455	
	33226 PLUNGER, REVERSE SHIFT RETURN						
8008-	BJ60,FJ60..4F			33226-36011-	1	455	
	33226A SPRING, COMPRESSION (FOR REVERSE SHIFT RETURN PLUNGER)						
8008-	BJ60,FJ60..4F			90501-16750-	1	455	
	33226B WASHER, TYPE C (FOR REVERSE SHIFT RETURN PLUNGER)						
8008-	BJ60,FJ60..4F			90213-06001-	1	455	

GENUINE TOYOTA PARTS

PROD.DATE	MODELS	DESCRIPTION	R/P	PART NUMBER	QTY	REV.REF.CODE FROM	REV.REF.CODE UP TO
	33226D PLUNGER, 1ST & 2ND SHIFT RETURN						
8210-	BJ60,HJ60..MTM			33226-60010-	1	467	
	33226E PLUNGER, REVERSE & 5TH SHIFT RETURN						
8210-	BJ60,HJ60..MTM			33226-60010-	1	467	
	33226F SPRING, COMPRESSION (FOR 1ST & 2ND SHIFT RETURN PLUNGER)						
8210-	BJ60,HJ60..MTM			90501-14076-	1	467	
	33226G SPRING, COMPRESSION(FOR REVERSE&5TH SHIFT RETURN PLUNGER)						
8210-	BJ60,HJ60..MTM			90501-14069-	1	467	
	33226H RING, SHAFT SNAP (FOR 1ST & 2ND SHIFT RETURN PLUNGER)						
8210-	BJ60,HJ60..MTM			90520-07001-	1	467	
	33226J RING, SHAFT SNAP (FOR REVERSE & 5TH SHIFT RETURN PLUNGER)						
8210-	BJ60,HJ60..MTM			90520-07001-	1	467	
	33231 HEAD, REVERSE SHIFT						
8008-	BJ60,FJ60..4F			33202-60021-	1	455	
	33231A SPRING, REVERSE SHIFT RESTRICT						
8008-	BJ60,FJ60..4F			90501-14035-	1	455	
	33231B BALL, REVERSE SHIFT RESTRICT						
8008-	BJ60,FJ60..4F			90360-06004-	1	455	
	33232 HEAD, 1ST & 2ND SHIFT						
8008-	BJ60,FJ60..4F			33233-60020-	1	455	
8210-	BJ60,HJ60..5F			33203-60010-	1	467	
	33234F HEAD, REVERSE & 5TH SHIFT						
8210-	BJ60,HJ60..MTM			33202-60030-	1	467	
	33234G RING, E (FOR REVERSE & 5TH SHIFT HEAD)						
8210-	BJ60,HJ60..MTM			90523-15025-	2	467	

PROD.DATE	MODELS	DESCRIPTION	R/P	PART NUMBER	QTY	REV.REF.CODE FROM	REV.REF.CODE UP TO
	33241 SHAFT, REVERSE SHIFT FORK						
8008-	BJ60,FJ60..4F			33241-60031-	1	455	
C 8210-	BJ60,HJ60..5F			33241-60050-	1	467	
	33241F RING, E (FOR REVERSE SHIFT FORK SHAFT)						
8210-	BJ60,HJ60..MTM			90523-15025-	1	467	
	33243 SHAFT, 1ST & 2ND SHIFT FORK						
8008-	BJ60,FJ60..4F			33242-60020-	1	455	
8210-	BJ60,HJ60..5F			33242-60030-	1	467	
	33244A SHAFT, 5TH SHIFT FORK						
8210-	BJ60,HJ60..MTM			33244-60010-	1	467	
	33245 SHAFT, 3RD & 4TH SHIFT FORK						
8008-	BJ60,FJ60..4F			33243-60051-	1	455	
8210-	BJ60,HJ60..5F			33243-60070-	1	467	
	33245A SHAFT, 5TH SHIFT ARM						
8210-	BJ60,HJ60..MTM			33245-60031-	1	467	
	33245C SEAL, OIL (FOR 5TH SHIFT ARM SHAFT)						
8210-	BJ60,HJ60..MTM			90311-16002-	1	467	
	33245D RING, SHAFT SNAP (FOR 3RD & 4TH SHIFT FORK SHAFT)						
8210-	BJ60,HJ60..MTM			90520-14002-	1	467	
	33251 LEVER, SHIFT & SELECT						
8210-	BJ60,HJ60..MTM			33251-60030-	1	467	
	33251A LEVER, SHIFT, INNER NO.1						
8210-	BJ60,HJ60..MTM			33251-60021-	1	467	
	33251C BOLT, SET (FOR SHIFT & SELECT LEVER)						
8210-	BJ60,HJ60..MTM			90113-08001-	2	467	
	33251D WASHER, LOCK (FOR SHIFT & SELECT LEVER)						
8210-	BJ60,HJ60..MTM			90215-09003-	2	467	

FIG.33-07 **GENUINE TOYOTA PARTS** 2-D3 **GENUINE TOYOTA PARTS**

	PROD.DATE	MODELS	DESCRIPTION	R/P	PART NUMBER	QTY	REV.REF.CODE FROM	REV.REF.CODE UP TO
		33261C	SHAFT, SHIFT & SELECT LEVER					
	8210-	BJ60,HJ60..MTM			33261-60020-	1	467	
		33264B	ROLLER, NO.1 (FOR SHIFT INTER LOCK)					
	8008-	BJ60,HJ60,FJ60..MTM			90361-10037-	2	455	
		33264C	BALL (FOR SHIFT INTER LOCK)					
	8210-	BJ60,HJ60..MTM			90360-10003-	2	467	
		33265A	ROLLER, NO.2 (FOR INTER LOCK)					
	8003-8207	BJ60,FJ60			90250-05034-	1	455	
	8207-	BJ60,HJ60,FJ60..MTM			90361-05001-	2		
		33275A	SPRING, COMPRESSION (FOR SHIFT DETENT BALL LOW SIDE)					
	8008-	BJ60,FJ60..4F			90501-16056-	3	455	
C	8210-	BJ60,HJ60..5F			90501-13011-	3	467	
		33275B	BALL, SHAFT DETENT					
	8008-	BJ60,HJ60,FJ60..MTM			90360-10003-	4	455	
		33276	SEAT, SHIFT DETENT BALL SPRING, NO.2					
C	8210-8504	BJ60..5F			90341-10004-	1	467	554
C	8504-	BJ60,HJ60..5F				1	555	
		33276A	SPRING, COMPRESSION, NO.2 (FOR SHIFT DETENT BALL)					
C	8210-	BJ60,HJ60..5F			90501-10067-	1	467	
		33276B	BALL, SHIFT DETENT, NO.2					
C	8210-	BJ60,HJ60..5F			90360-08009-	1	467	
		33280	PIN ASSY, REVERSE RESTRICT					
	8210-	BJ60,HJ60..MTM			33280-60010-	1	467	
		33283D	PLUG (FOR REVERSE RESTRICT PIN)					
	8210-	BJ60,HJ60..MTM			90341-12008-	1	467	
		33283G	PIN, SLOTTED SPRING (FOR REVERSE RESTRICT PIN)					
	8210-	BJ60,HJ60..MTM			90254-05016-	1	467	

PROD.DATE	MODELS	DESCRIPTION	R/P	PART NUMBER	QTY	REV.REF.CODE FROM	REV.REF.CODE UP TO
	33521	HOUSING, SHIFT LEVER					
8210-	BJ60,HJ60..MTM			33521-60020-	1	467	
	33531C	BOOT, DUST (FOR 5TH SHIFT ARM SHAFT)					
8210-	BJ60,HJ60..MTM			33531-36040-	1	467	

FIG.33-12 SHIFT LEVER & RETAINER

MR4-11-0425

(8008-8110)4F

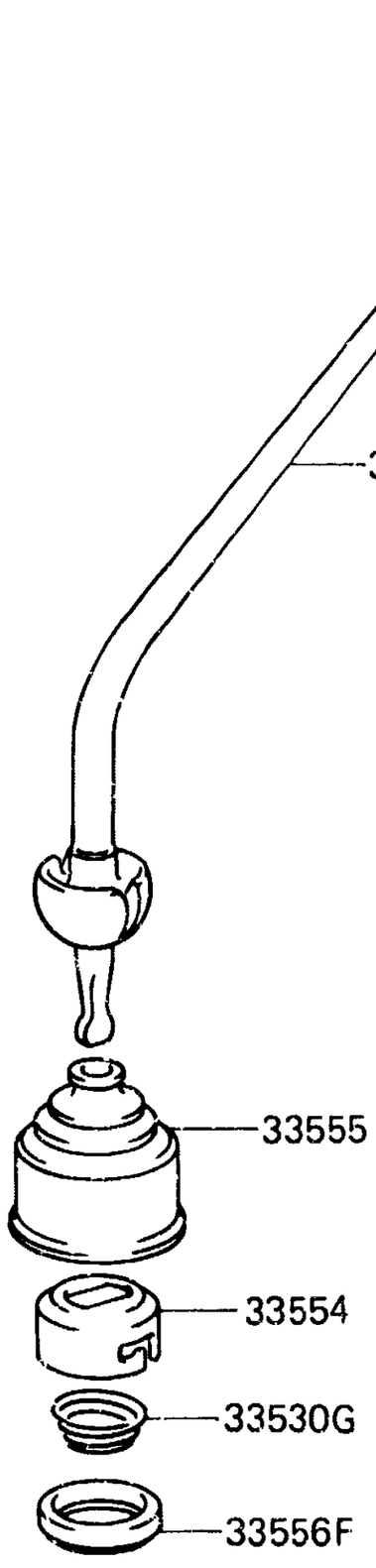

MC 7228-D

(8110-8510)4F

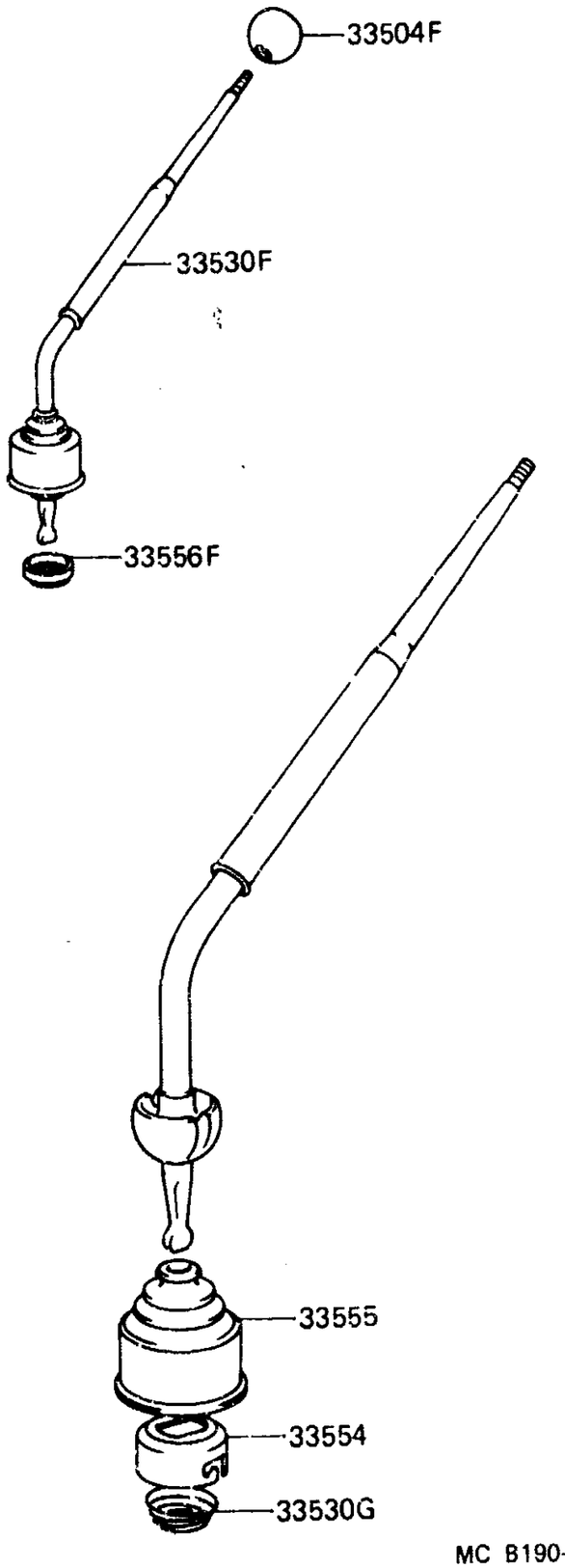

MC B190-B

FIG.33-12 SHIFT LEVER & RETAINER

2-F3

MR4-11-0426

(8210-8404)5F

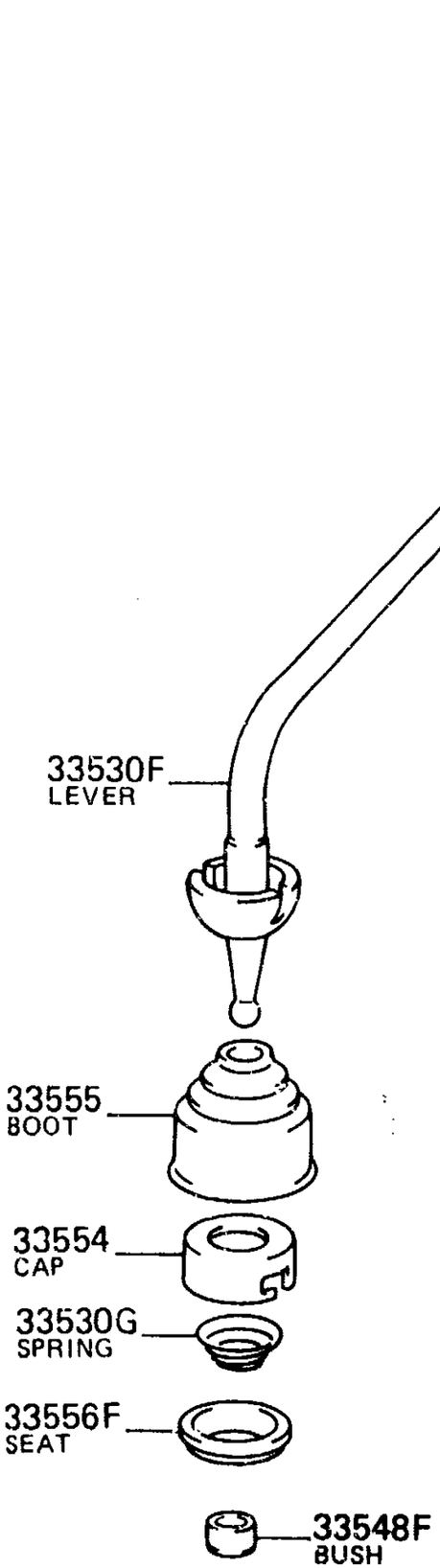

MC B191-A

MCB191A

(8404-)5F

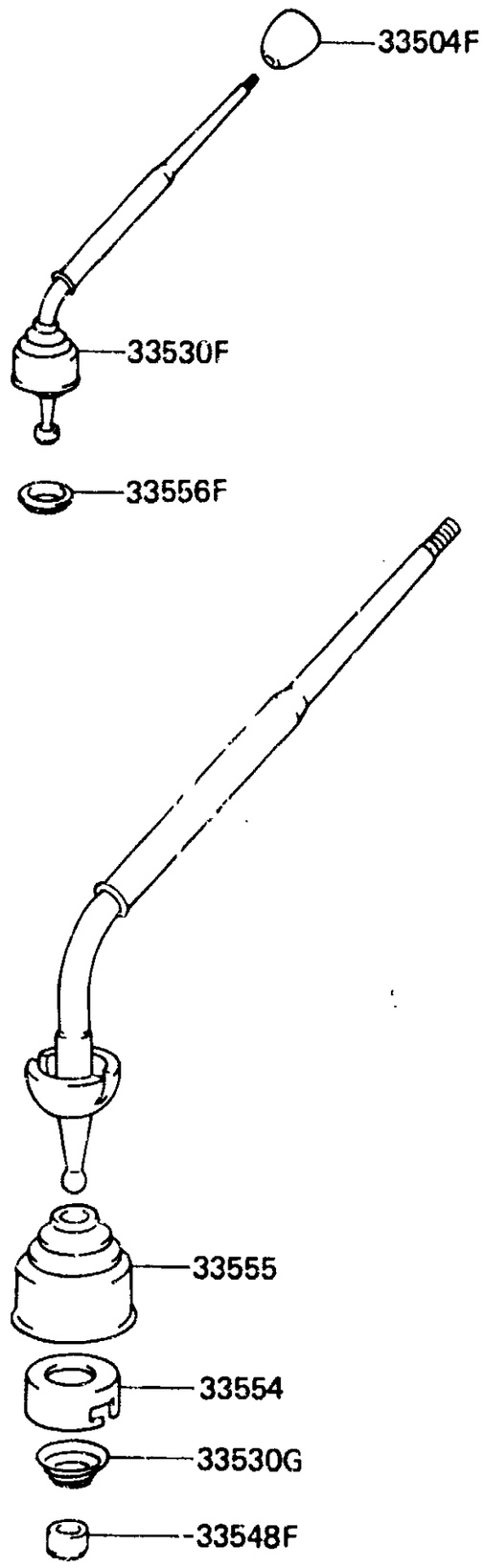

MC B192

MCB192

FIG.33-12 SHIFT LEVER & RETAINER

2-G3

GENUINE TOYOTA PARTS

(8510-)4FC

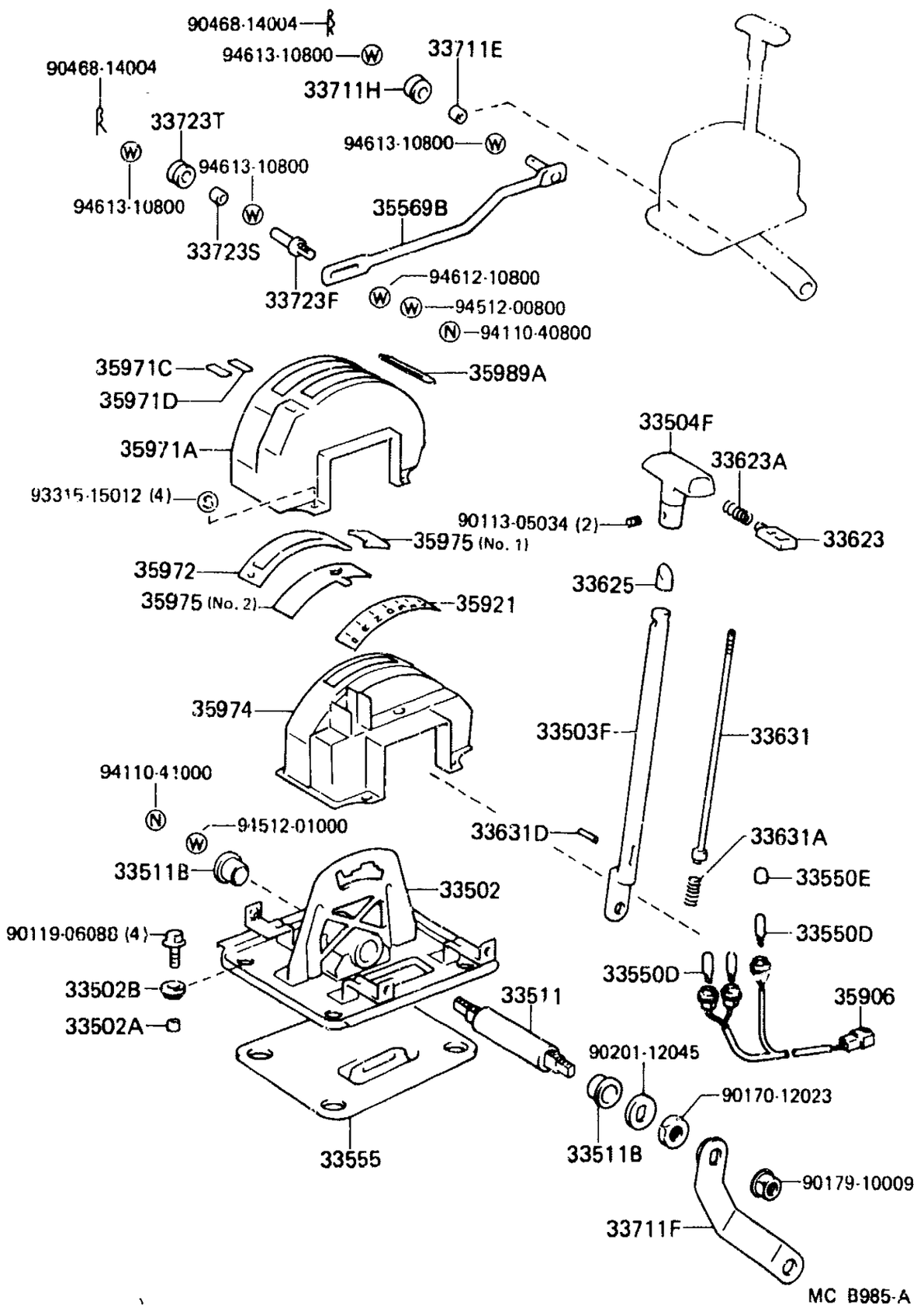

PROD.DATE	MODELS	DESCRIPTION	R/P	PART NUMBER	QTY	REV.REF.CODE FROM	REV.REF.CODE UP TO
FIG.	33-12 SHIFT LEVER & RETAINER						
	33502 PLATE SUB-ASSY, SHIFT LEVER						
8510-	HJ60••ATM			33502-60040-	1	567	
	33502A COLLAR (FOR FLOOR SHIFT SETTING)						
8510-	HJ60••ATM			90387-06065-	4	567	
	33502B GROMMET (FOR SHIFT LEVER PLATE)						
8510-	HJ60••ATM			38628-60010-	4	567	
	33503F LEVER SUB-ASSY, SHIFT (FOR FLOOR SHIFT)						
8510-	HJ60••ATM			33503-60020-	1	567	
	33504F KNOB SUB-ASSY, SHIFT LEVER (FOR FLOOR SHIFT)						
8008-8110	BJ60,FJ60••WGV			33504-60030-	1	455	458
8110-	BJ60,FJ60••4F			33504-60040-	1	459	
8210-	BJ60,HJ60••5F			33504-22111-01	1	467	
8008-8110	FJ60••WGG			33504-60040-	1	455	458
8510-	HJ60••ATM	SHADOW GRAY		33542-30110-13	1	567	
8510-	HJ60••ATM	SEPIA BROWN		33542-30110-36	1	567	
	33511 SHAFT, CONTROL (FOR FLOOR SHIFT)						
8510-	HJ60••ATM			33511-60060-	1	567	
	33511B BUSH (FOR CONTROL SHAFT)						
8510-	HJ60••ATM			90385-16008-	2	567	
	33530A SPRING, COMPRESSION (FOR SHIFT LEVER)						
8008-	BJ60,FJ60••4F			90502-29001-	1	455	
	33530F LEVER ASSY, SHIFT (FOR FLOOR SHIFT)						
8210-8404	BJ60			33541-60180-	1	467	
8404-8411	BJ60••5F			33530-60180-	1		514
8008-8110	BJ60,FJ60••WGV			33541-60120-	1	455	458
8110-8504	BJ60,FJ60••4F			33530-60060-	1	459	554

GENUINE TOYOTA PARTS

	PROD.DATE	MODELS	DESCRIPTION	R/P	PART NUMBER	QTY	REV.REF.CODE FROM	REV.REF.CODE UP TO
		33530F LEVER ASSY, SHIFT (FOR FLOOR SHIFT) CONTINUED						
	8411-	BJ60,HJ60..5F			33530-60160-	1	515	
	8504-	FJ60			33530-60140-	1	555	
	8008-8110	FJ60..WGG			33530-60060-	1	455	458
		33530G SPRING, CONICAL (FOR SHIFT LEVER)						
	8210-8504	BJ60			90502-29001-	1	467	554
	8504-	BJ60,HJ60,FJ60..MTM				1	555	
		33548F BUSH, SHIFT LEVER (FOR FLOOR SHIFT)						
	8210-	BJ60,HJ60..MTM			33548-60020-	1	467	
		33550D BULB (FOR FLOOR SHIFT POSITION INDICATOR LAMP)						
	8510-	HJ60..ATM	INDICATOR		84999-10100-	2	567	
	8510-	HJ60..ATM	LIGHTING		90981-16020-	1	567	
		33550E CAP (FOR FLOOR SHIFT POSITION INDICATOR LAMP)						
	8510-	HJ60..ATM			90339-04014-	1	567	
		33554 CAP, SHIFT LEVER						
	8008-	BJ60,HJ60,FJ60..MTM			33554-60021-	1	455	
		33555 BOOT, SHIFT LEVER						
	8008-	BJ60,HJ60,FJ60..MTM			33555-55011-	1	455	
	8510-	HJ60..ATM			33555-60040-	1	567	
		33556F SEAT, TRANSMISSION SHIFT LEVER BALL						
	8008-8510	BJ60,FJ60			# 33505-60010- (33505-60011-)	1	455	566
C	8604-	FJ60			33505-60011-	1	573	
	8510-	HJ60..MTM				1	567	
		33623 BUTTON, SHIFT LEVER KNOB						
	8510-	HJ60..ATM			33623-22060-	1	567	
		33623A SPRING, COMPRESSION						
	3510-	HJ60..ATM			90501-07009-	1	567	

PROD.DATE	MODELS	DESCRIPTION	R/P	PART NUMBER	QTY	REV.REF.CODE FROM	REV.REF.CODE UP TO
	33625 SLEEVE, SHIFT LEVER KNOB						
8510-	HJ60..ATM			33625-22020-	1	567	
	33631 ROD, DETENT						
8510-	HJ60..ATM			33631-60020-	1	567	
	33631A SPRING, COMPRESSION (FOR DETENT ROD)						
8510-	HJ60..ATM			90501-07005-	1	567	
	33631D PIN, GROOVED (FOR DETENT ROD)						
8510-	HJ60..ATM			90256-04001-	1	567	
	33711E BUSH (FOR CONTROL SHAFT LEVER)						
8510-	HJ60..ATM			90389-08005-	1	567	
	33711F LEVER, CONTROL SHAFT (FOR FLOOR SHIFT)						
8510-	HJ60..ATM			33711-60050-	1	567	
	33711H GROMMET (FOR CONTROL SHAFT LEVER)						
8510-	HJ60..ATM			90480-17177-	1	567	
	33723F SWIVEL, CONNECTING ROD (FOR FLOOR SHIFT)						
8510-	HJ60..ATM			33723-22010-	1	567	
	33723S BUSH (FOR CONNECTING ROD SWIVEL)						
8510-	HJ60..ATM			90389-08005-	1	567	
	33723T GROMMET (FOR CONNECTING ROD SWIVEL)						
8510-	HJ60..ATM			90480-17177-	1	567	
	35569B ROD, TRANSMISSION CONTROL (FOR FLOOR SHIFT)						
8510-	HJ60..ATM			35569-60050-	1	567	
	35906 WIRE SUB-ASSY, INDICATOR LAMP						
8510-	HJ60..ATM			35906-60030-	1	567	
	35921 PLATE, CONTROL POSITION INDICATOR						
8510-	HJ60..ATM			35921-60030-	1	567	

PROD.DATE	MODELS	DESCRIPTION	R/P	PART NUMBER	QTY	REV.REF.CODE FROM	REV.REF.CODE UP TO
	35971A HOUSING, POSITION INDICATOR, UPPER						
8510-	HJ60••ATM			35971-60030-	1	567	
	35971C LENS, PARKING BRAKE WARNING LAMP						
8510-	HJ60••ATM			55499-60010-	1	567	
	35971D LENS, CONSOLE END PANEL LAMP						
8510-	HJ60••ATM			58936-60010-	1	567	
	35972 COVER, POSITION INDICATOR HOUSING						
8510-	HJ60••ATM			35972-60020-	1	567	
	35974 HOUSING, POSITION INDICATOR, LOWER						
8510-	HJ60••ATM			35974-60030-	1	567	
	35975 COVER, SLIDE (FOR POSITION INDICATOR)						
8510-	HJ60••ATM	NO.1		35975-60020-	1	567	
8510-	HJ60••ATM	NO.2		35975-60030-	1	567	
	35989A PLATE, TRANSMISSION NAME						
8510-	HJ60••ATM			35989-60020-	1	567	

PROD.DATE	MODELS	DESCRIPTION	R/P	PART NUMBER	QTY	REV.REF.CODE FROM	REV.REF.CODE UP TO

FIG•35-01 TRANSAXLE OR TRANSMISSION ASSY & GASKET KIT (ATM)

2-J3

GENUINE TOYOTA PARTS

(8510-)

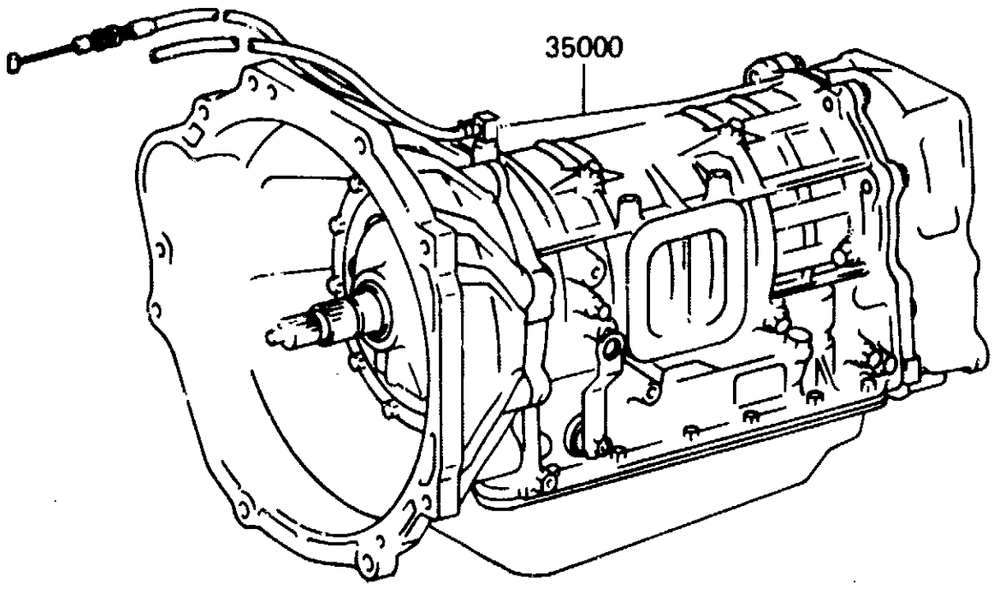

30005K

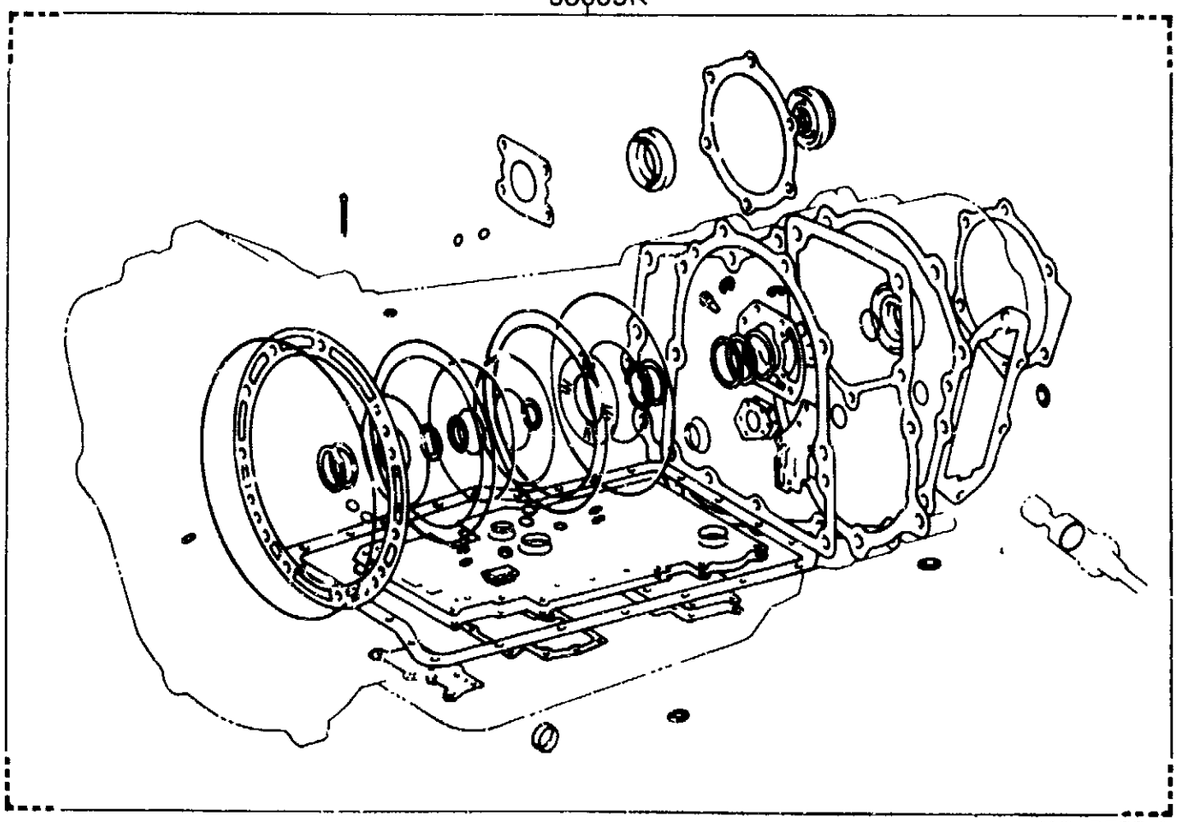

MC B709-A

PROD.DATE	MODELS	DESCRIPTION	R/P	PART NUMBER	QTY	REV.REF.CODE FROM	REV.REF.CODE UP TO
FIG•	35-01 TRANSAXLE OR TRANSMISSION ASSY & GASKET KIT (ATM)						
	30005K GASKET KIT, AUTOMATIC TRANSMISSION OVERHAUL						
8510-	HJ60••ATM			04351-60010-	1	567	
	35000 TRANSMISSION ASSY, AUTOMATIC						
8510-	HJ60••ATM			35000-60030-	1	567	

FIG.35-02 TORQUE CONVERTER, FRONT OIL PUMP & CHAIN (ATM)

2-K3

(8510-)

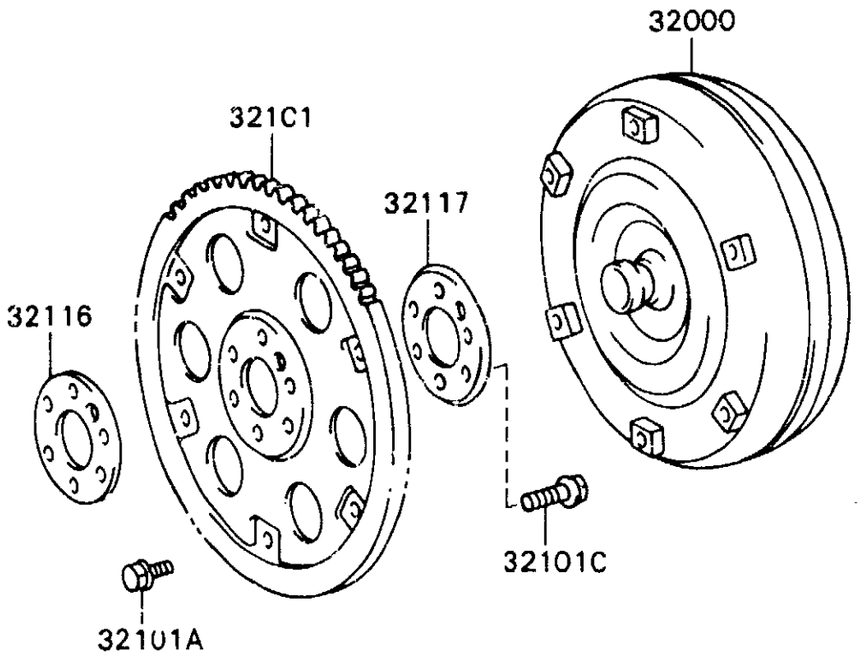

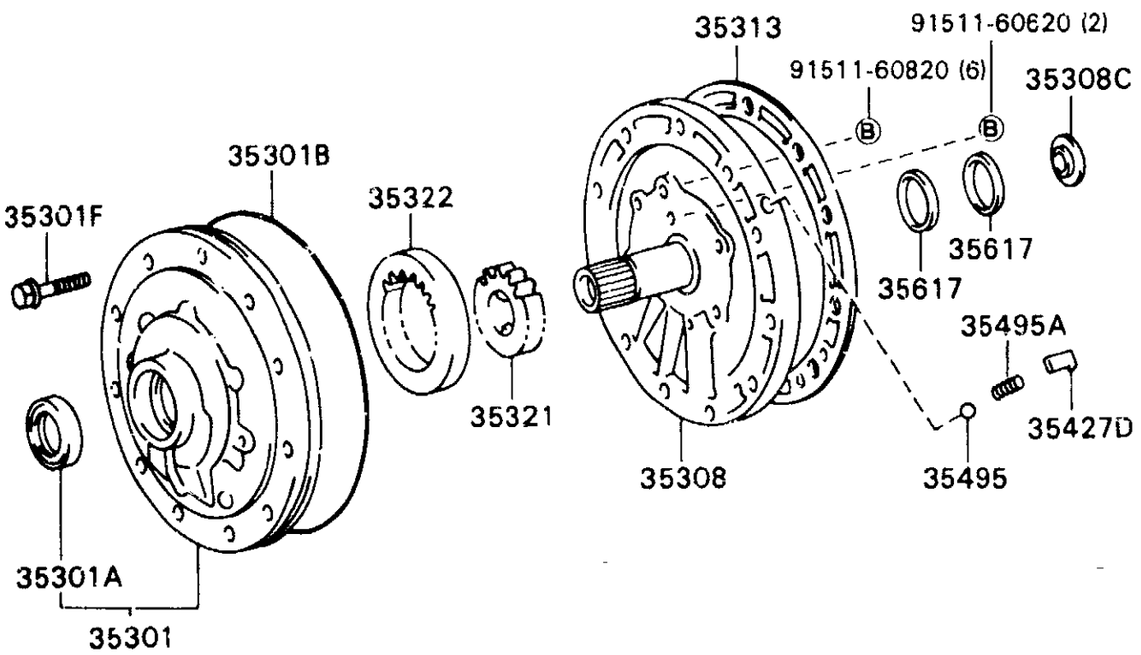

MC B710

GENUINE TOYOTA PARTS

	PROD.DATE	MODELS	DESCRIPTION	R/P	PART NUMBER	QTY	REV.REF.CODE FROM	REV.REF.CODE UP TO
	FIG.	35-02 TORQUE CONVERTER, FRONT OIL PUMP & CHAIN (ATM)						
		32000	CONVERTER ASSY, TORQUE					
	8510-	HJ60..ATM			32000-36010-	1	567	
		32101	GEAR SUB-ASSY, DRIVE PLATE & RING					
	8510-	HJ60..ATM			32101-60020-	1	567	
		32101A	BOLT (FOR DRIVE PLATE & TORQUE CONVERTER SETTING)					
	8510-	HJ60..ATM	BLACK		90119-08497-	5	567	
	8510-	HJ60..ATM	OLIVE GREEN		90119-08523-	1	567	
		32101C	BOLT, HEXAGON (FOR DRIVE PLATE SETTING)					
C	8510-	HJ60..ATM			90105-12039-	6	567	
		32116	SPACER, DRIVE PLATE, FRONT					
	8510-	HJ60..ATM			32116-60020-	1	567	
		32117	SPACER, DRIVE PLATE, REAR					
	8510-	HJ60..ATM			32117-60020-	1	567	
		35301	BODY SUB-ASSY, FRONT OIL PUMP					
	8510-	HJ60..ATM			35301-36010-	1	567	
		35301A	SEAL, OIL (FOR FRONT OIL PUMP)					
	8510-	HJ60..ATM			90311-42010-	1	567	
		35301B	RING, O (FOR FRONT OIL PUMP BODY)					
	8510-	HJ60..ATM			90301-99029-	1	567	
		35301F	BOLT (FOR FRONT OIL PUMP SETTING)					
	8510-	HJ60..ATM			91511-60850-	11	567	
		35308	COVER SUB-ASSY, FRONT OIL PUMP					
	8510-	HJ60..ATM			35308-36010-	1	567	
		35308C	RACE, THRUST BEARING (FOR FRONT OIL PUMP COVER)					
	8510-	HJ60..ATM	T=0.8		35789-36040-	1	567	

PROD.DATE	MODELS	DESCRIPTION	R/P	PART NUMBER	QTY	REV.REF.CODE FROM	REV.REF.CODE UP TO
	35308C RACE, THRUST BEARING (FOR FRONT OIL PUMP COVER CONTINUED						
8510-	HJ60..ATM	T=1.0		35789-36050-	1	567	
8510-	HJ60..ATM	T=1.4		35789-36060-	1	567	
	35313 GASKET, FRONT OIL PUMP COVER						
8510-	HJ60..ATM			35313-36010-	1	567	
	35321 GEAR, FRONT OIL PUMP DRIVE						
8510-	HJ60..ATM	T=18.451-18.486		35321-36010-	1	567	
8510-	HJ60..ATM	T=18.435-18.450		35321-36020-	1	567	
	35322 GEAR, FRONT OIL PUMP DRIVEN						
8510-	HJ60..ATM	T=18.451-18.486		35322-36010-	1	567	
8510-	HJ60..ATM	T=18.435-18.450		35322-36020-	1	567	
	35427D SEAT, CHECK VALVE SPRING						
8510-	HJ60..ATM			35427-36010-	1	567	
	35495 BALL, CHECK						
8510-	HJ60..ATM			35495-36010-	1	567	
	35495A SPRING, COMPRESSION (FOR CHECK BALL)						
8510-	HJ60..ATM			90501-18677-	1	567	
	35617 RING, CLUTCH DRUM OIL SEAL						
8510-	HJ60..ATM			35617-36010-	2	567	

PROD.DATE	MODELS	DESCRIPTION	R/P	PART NUMBER	QTY	REV.REF.CODE FROM	REV.REF.CODE UP TO

FIG.35-03 TRANSMISSION CASE & OIL PAN (ATM)

2-M3

(8510-)

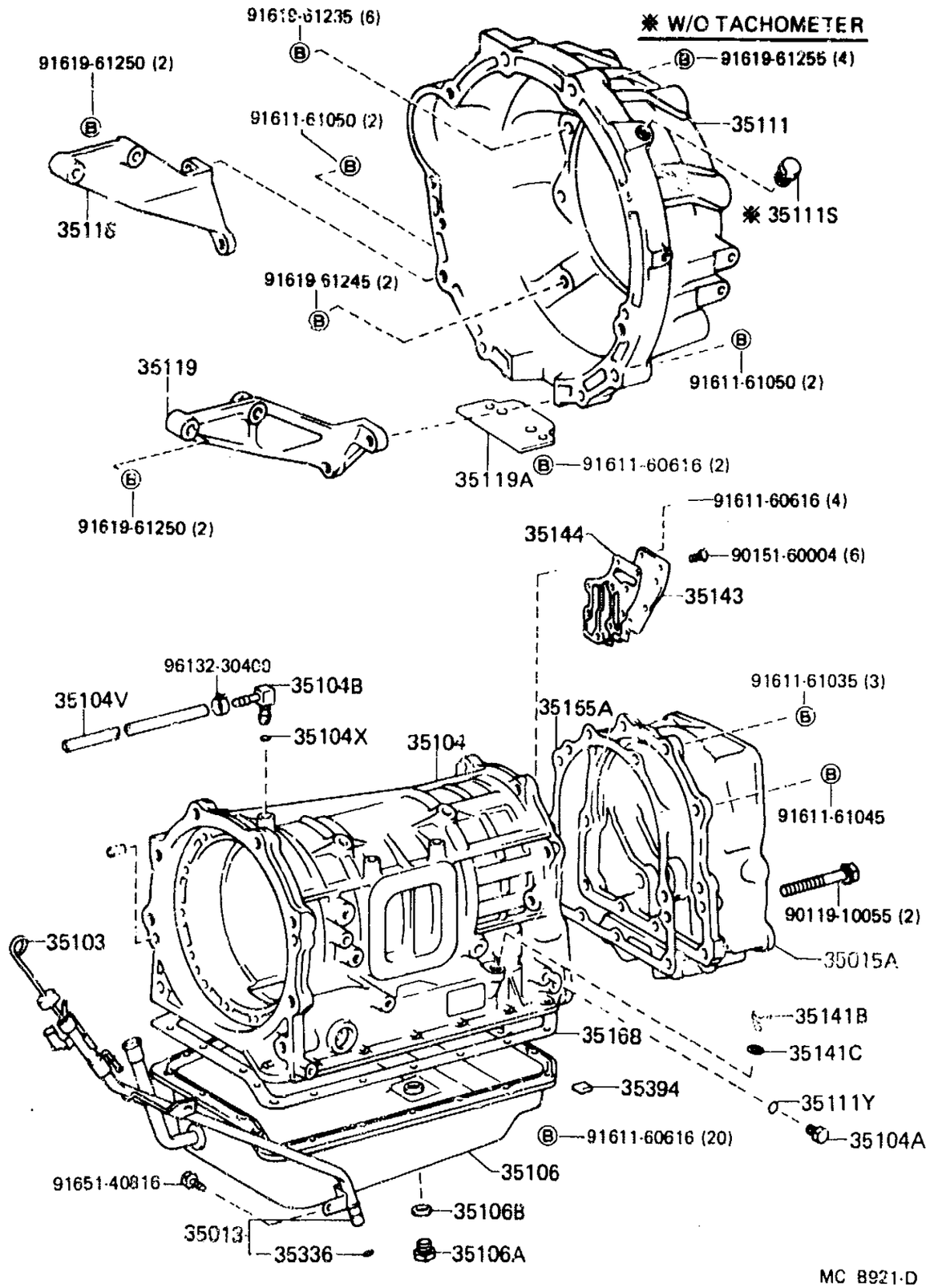

GENUINE TOYOTA PARTS

PROD.DATE	MODELS	DESCRIPTION	R/P	PART NUMBER	QTY	REV.REF.CODE FROM	REV.REF.CODE UP TO
FIG.	35-03 TRANSMISSION CASE & OIL PAN (ATM)						
	35013	TUBE SUB-ASSY, TRANSMISSION OIL FILLER					
8510-	HJ60..ATM			35013-60020-	1	567	
	35015A	ADAPTER SUB-ASSY, TRANSMISSION CASE, REAR					
8510-	HJ60..ATM			35015-60010-	1	567	
	35103	GAGE SUB-ASSY, TRANSMISSION OIL LEVEL					
8510-	HJ60..ATM			35103-60020-	1	567	
	35104	CASE SUB-ASSY, AUTOMATIC TRANSMISSION					
8510-	HJ60..ATM			35104-60010-	1	567	
	35104A	PLUG, AUTOMATIC TRANSMISSION CASE					
8510-	HJ60..ATM			90341-08001-	6	567	
	35104B	PLUG, BREATHER (ATM)					
8510-	HJ60..ATM			90930-03094-	1	567	
	35104V	HOSE (FOR BREATHER PLUG)					
8510-	HJ60..ATM			90445-11072-	1	567	
	35104X	RING, O (FOR BREATHER PLUG)					
8510-	HJ60..ATM			90301-06005-	1	567	
	35106	PAN SUB-ASSY, AUTOMATIC TRANSMISSION OIL					
8510-	HJ60..ATM			35106-60010-	1	567	
	35106A	PLUG SUB-ASSY, DRAIN (ATM)					
8510-	HJ60..ATM			90341-18057-	1	567	
	35106B	GASKET, DRAIN PLUG (ATM)					
8510-	HJ60..ATM			12157-10010-	1	567	
	35111	HOUSING, AUTOMATIC TRANSMISSION					
8510-	HJ60..ATM			35111-60010-	1	567	

GENUINE TOYOTA PARTS

PROD.DATE	MODELS	DESCRIPTION	R/P	PART NUMBER	QTY	REV.REF.CODE FROM	REV.REF.CODE UP TO
	35111Y	RING, O (FOR AUTOMATIC TRANSMISSION CASE)					
8510-	HJ60..ATM			90301-06196-	6	567	
	35118	PLATE, STIFENER, RH (ATM)					
8510-	HJ60..ATM			33118-60010-	1	567	
	35119	PLATE, STIFENER, LH (ATM)					
8510-	HJ60..ATM			33119-60010-	1	567	
	35136	HANGER, TRANSMISSION, NO.1					
8510-	HJ60..ATM			35136-60010-	1	567	
	35138	ADAPTER, STIFFENER PLATE					
8510-	HJ60..ATM			35138-60010-	1	567	
	35141B	PLUG (FOR AUTOMATIC TRANSMISSION CASE)					
8510-	HJ60..ATM			90341-16010-	1	567	
	35141C	WASHER, PLATE (FOR AUTOMATIC TRANSMISSION CASE)					
8510-	HJ60..ATM			90201-16013-	1	567	
	35143	COVER, TRANSMISSION CASE, REAR					
8510-	HJ60..ATM			35143-36010-	1	567	
	35144	GASKET, TRANSMISSION CASE REAR COVER					
8510-	HJ60..ATM			35144-36010-	1	567	
	35155A	GASKET, TRANSMISSION CASE ADPTOR					
8510-	HJ60..ATM			35182-36010-	1	567	
	35168	GASKET, AUTOMATIC TRANSMISSION OIL PAN					
8510-	HJ60..ATM			35168-36010-	1	567	
	35336	RING, O (FOR TRANSMISSION OIL FILLER TUBE)					
8510-	HJ60..ATM			90301-09173-	1	567	
	35394	MAGNET, OIL CLEANER (FOR TRANSMISSION)					
8510-	HJ60..ATM			35394-30011-	2	567	

PROD.DATE | MODELS | DESCRIPTION | R/P | PART NUMBER | QTY | REV.REF.CODE FROM | REV.REF.CODE UP TO

FIG.35-05 SPEEDOMETER DRIVEN GEAR (ATM)

2-B4

GENUINE TOYOTA PARTS

(8510-)

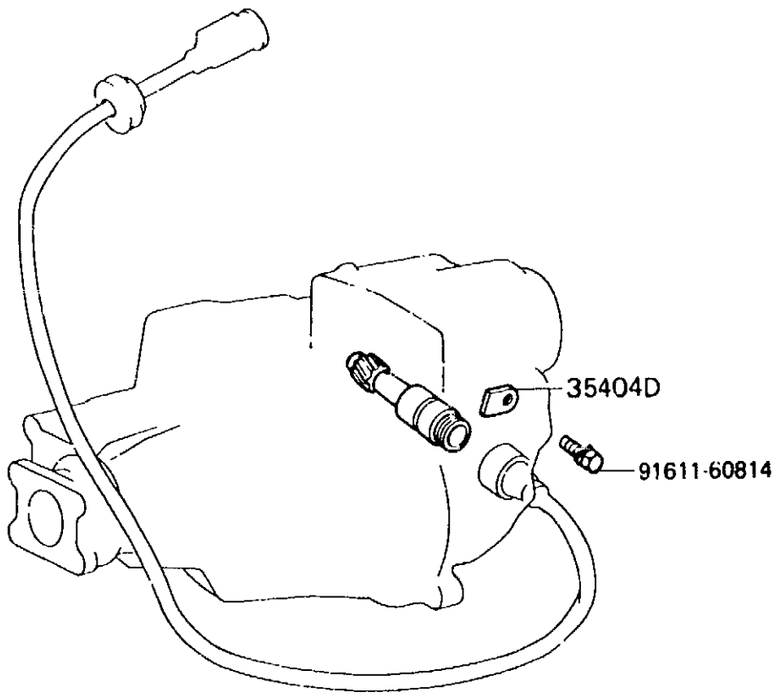

35403

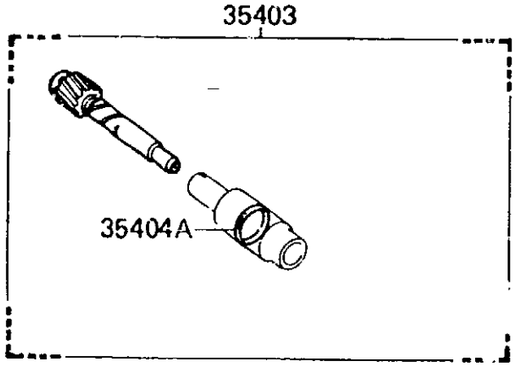

35404

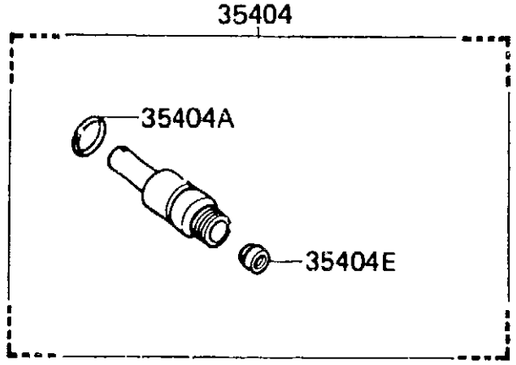

MC B712

PROD.DATE	MODELS	DESCRIPTION	R/P	PART NUMBER	QTY	REV.REF.CODE FROM	REV.REF.CODE UP TO
FIG.	35-05 SPEEDOMETER DRIVEN GEAR (ATM)						
	35403 GEAR SUB-ASSY, SPEEDMETER DRIVEN (ATM)						
8510-	HJ60••ATM	N=18,MARK: 18X6		33403-69065-	1	567	
	35404 SLEEVE SUB-ASSY, SPEEDMETER SHAFT (ATM)						
8510-	HJ60••ATM			33404-30040-	1	567	
	35404A RING, O (FOR ATM SPEEDMETER SHAFT SLEEVE)						
8510-	HJ60••ATM			90301-18018-	1	567	
	35404D PLATE, SPEEDMETER SLEEVE LOCK (ATM)						
8510-	HJ60••ATM			33485-30020-	1	567	
	35404E SEAL, OIL (FOR ATM SPEEDMETER SHAFT SLEEVE)						
8510-	HJ60••ATM			90310-09001-	1	567	

FIG. 35-06 OVERDRIVE GEAR (ATM)

(8510-)

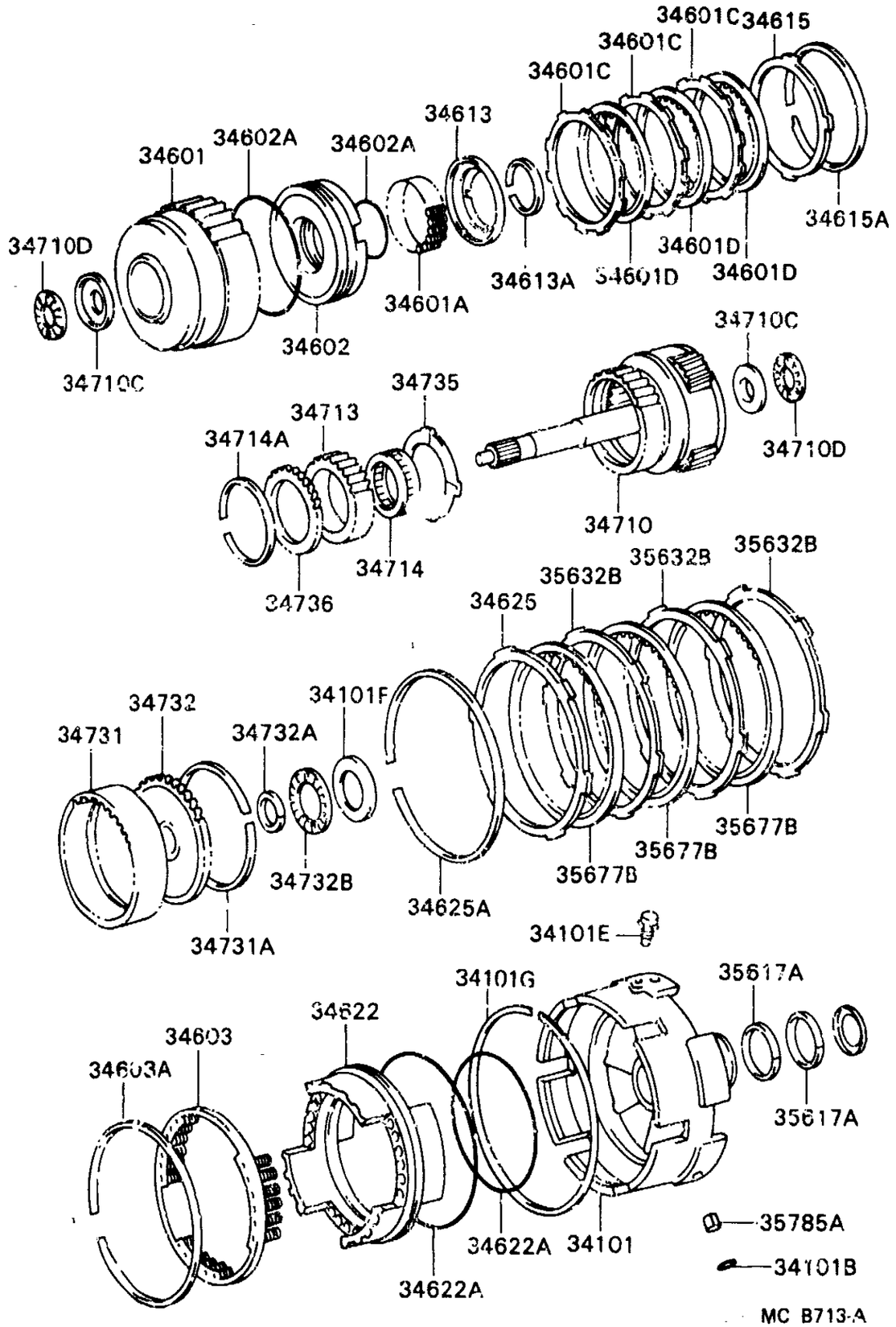

GENUINE TOYOTA PARTS

PROD.DATE	MODELS	DESCRIPTION	R/P	PART NUMBER	QTY	REV.REF.CODE FROM	REV.REF.CODE UP TO
FIG.	35-06 OVERDRIVE GEAR (ATM)						
	34101 CASE SUB-ASSY, OVERDRIVE						
8510-	HJ60••ATM			34101-60010-	1	567	
	34101B RING, O (FOR OVERDRIVE CASE)						
8510-	HJ60••ATM			90301-09008-	3	567	
	34101E BOLT (FOR OVERDRIVE CASE & TRANSAXLE CASE SETTING)						
8510-	HJ60••ATM			90105-10096-	3	567	
	34101F RACE, THRUST BEARING (FOR OVERDRIVE CASE FRONT)						
8510-	HJ60••ATM			35789-36020-	1	567	
	34101G RING, HOLE SNAP (FOR OVERDRIVE CASE)						
8510-	HJ60••ATM			90521-99043-	1	567	
	34601 DRUM SUB-ASSY, OVERDRIVE DIRECT CLUTCH						
8510-	HJ60••ATM			34601-36010-	1	567	
	34601A SPRING, COMPRESSION (FOR OVERDRIVE DIRECT CLUTCH)						
8510-	HJ60••ATM			90501-10087-	24	567	
	34601C PLATE, CLUTCH (FOR OVERDRIVE)						
8510-	HJ60••ATM			35634-36010-	3	567	
	34601D DISC, CLUTCH (FOR OVERDRIVE)						
8510-	HJ60••ATM			35633-36020-	3	567	
	34602 PISTON SUB-ASSY, OVERDRIVE DIRECT CLUTCH						
8510-	HJ60••ATM			34602-36010-	1	567	
	34602A RING, O (FOR OVERDRIVE DIRECT CLUTCH PISTON)						
8510-	HJ60••ATM	INNER		90301-59003-	1	567	
8510-	HJ60••ATM	OUTER		90301-99027-	1	567	
	34603 SPRING SUB-ASSY, OVERDRIVE BRAKE RETURN						
8510-	HJ60••ATM			35608-36010-	1	567	

PROD. DATE	MODELS	DESCRIPTION	R/P	PART NUMBER	QTY	REV. REF. CODE FROM	REV. REF. CODE UP TO
	34603A RING, HOLE SNAP (FOR OVERDRIVE BRAKE RETURN SP RING)						
8510-	HJ60••ATM			90521-99021-	1	567	
	34613 SEAT, OVERDRIVE DIRECT CLUTCH RETURN SPRING						
8510-	HJ60••ATM			34613-36010-	1	567	
	34613A RING, SHAFT SNAP (FOR OVERDRIVE DIRECT CLUTCH RETURN SPRING)						
8510-	HJ60••ATM			90520-50001-	1	567	
	34615 FLANGE, OVERDRIVE CLUCH						
8510-	HJ60••ATM			35675-36010-	1	567	
	34615A RING, HOLE SNAP (FOR OVERDRIVE CLUTCH FLANGE)						
8510-	HJ60••ATM			90521-99017-	1	567	
	34622 PISTON, OVERDRIVE BRAKE						
8510-	HJ60••ATM			35621-36010-	1	567	
	34622A RING, O (FOR OVERDRIVE BRAKE PISTON)						
8510-	HJ60••ATM	OUTER		90301-99030-	1	567	
8510-	HJ60••ATM	INNER		90301-99031-	1	567	
	34625 FLANGE, OVERDRIVE BRAKE						
8510-	HJ60••ATM			35676-36010-	3	567	
	34625A RING, HOLE SNAP (FOR OVERDRIVE BRAKE FLANGE)						
8510-	HJ60••ATM			90521-99021-	1	567	
	34710 GEAR ASSY, OVERDRIVE PLANETARY						
8510-	HJ60••ATM			34710-36010-	1	567	
	34710C RACE, THRUST BEARING (FOR OVERDRIVE PLANETARY GEAR)						
8510-	HJ60••ATM	RR		35789-36010-	1	567	
8510-	HJ60••ATM	FR		35789-36070-	1	567	
	34710D BEARING, THRUST NEEDLEROLLER (FOR OVERDRIVE PLANETARY GEAR)						
8510-	HJ60••ATM	RR		90374-25004-	1	567	
8510-	HJ60••ATM	FR		90374-28007-	1	567	

PROD. DATE	MODELS	DESCRIPTION	R/P	PART NUMBER	QTY	REV. REF. CODE FROM	REV. REF. CODE UP TO
	34713 RACE, 1 WAY CLUTCH OUTER (FOR OVERDRIVE)						
8510-	HJ60••ATM			34713-36010-	1	567	
	34714 CLUTCH, 1 WAY (FOR OVERDRIVE)						
8510-	HJ60••ATM			35791-36010	1	567	
	34714A RING, HOLE SNAP (FOR 1 WAY CLUTCH)						
8510-	HJ60••ATM			90521-90002-	1	567	
	34731 GEAR, OVERDRIVE PLANETARY RING						
8510-	HJ60••ATM			34731-36010-	1	567	
	34731A RING, HOLE SNAP (FOR OVERDRIVE PLANETARY RING GEAR)						
8510-	HJ60••ATM			90521-99019-	1	567	
	34732 FLANGE, OVERDRIVE PLANETARY RING GEAR						
8510-	HJ60••ATM			34732-36010-	1	567	
	34732A RING, OIL SEAL (FOR OVERDRIVE PLANETARY RING GEAR FLANGE)						
8510-	HJ60••ATM			35712-36010-	1	567	
	34732B BEARING, THRUST (FOR OVERDRIVE PLANETARY RING GEAR FLANGE)						
8510-	HJ60••ATM			90374-34001-	1	567	
	34735 WASHER, OVERDRIVE PLANETARY GEAR THRUST, NO.1						
8510-	HJ60••ATM			34737-36010-	1	567	
	34736 WASHER, OVERDRIVE PLANETARY GEAR THRUST, NO.2						
8510-	HJ60••ATM			34738-36010-	1	567	
	35617A RING, CLUTCH DRUM OIL SEAL (FOR OVERDRIVE)						
8510-	HJ60••ATM			35617-36020-	2	567	
	35632B PLATE, BRAKE (FOR OVERDRIVE)						
8510-	HJ60••ATM			35632-36010-	3	567	
	35677B DISC, CLUTCH (FOR OVERDRIVE BRAKE)						
8510-	HJ60••ATM			35633-36010-	3	567	

FIG. 35-06 **GENUINE TOYOTA PARTS** 2-E4 **GENUINE TOYOTA PARTS** MR4-15-0376

PROD. DATE	MODELS	DESCRIPTION	R/P	PART NUMBER	QTY	REV. REF. CODE FROM	REV. REF. CODE UP TO
	35785A RETAINER,	OVERDRIVE CASE RING					
8510-	HJ60••ATM			35785-36010-	3	567	

PROD. DATE	MODELS	DESCRIPTION	R/P	PART NUMBER	QTY	REV. REF. CODE FROM	REV. REF. CODE UP TO

FIG.35-07 BRAKE BAND & MULTIPLE DISC CLUTCH (ATM)

2-F4

GENUINE TOYOTA PARTS

(8510-)

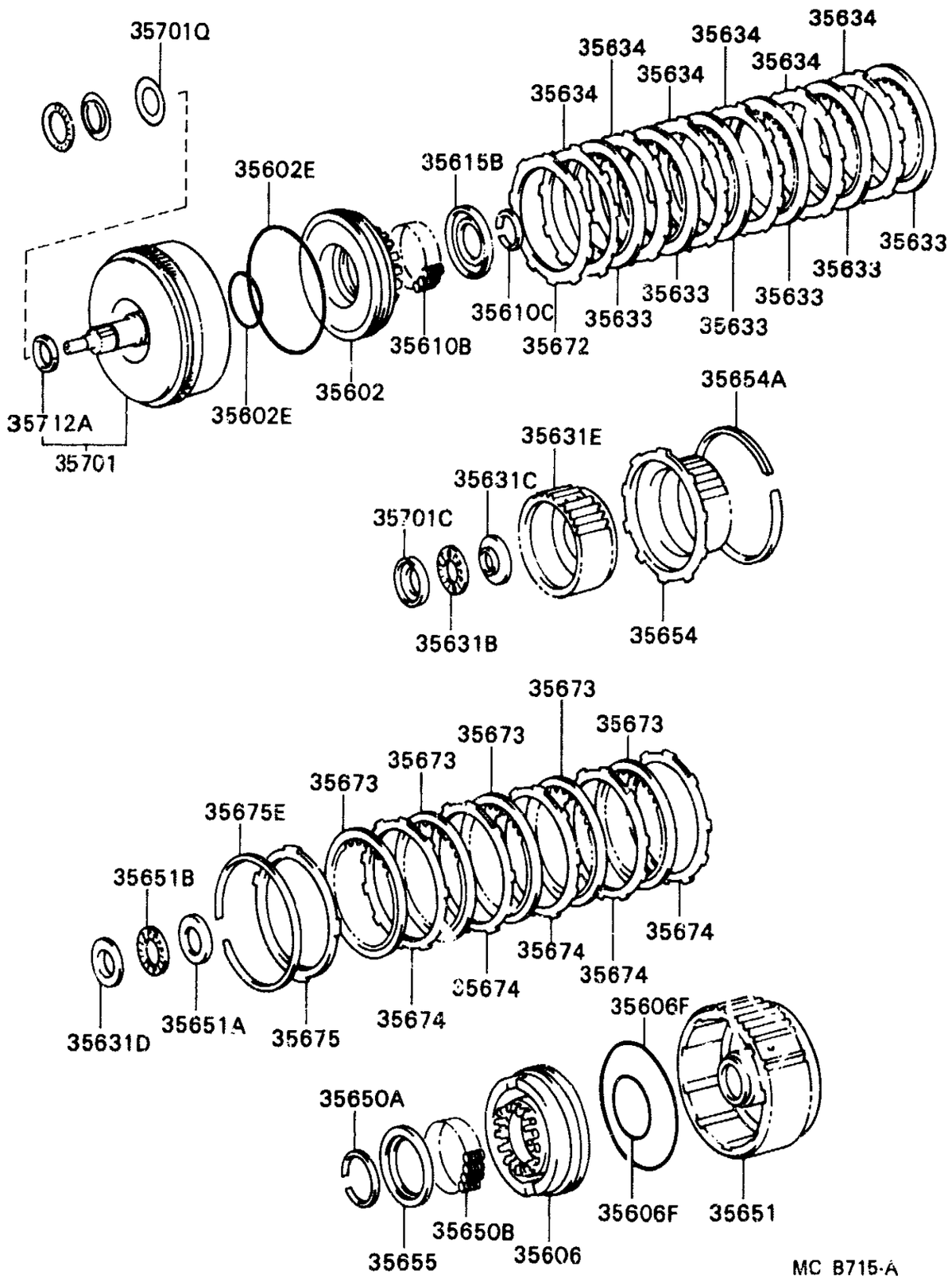

MC 8715-A

PROD.DATE	MODELS	DESCRIPTION	R/P	PART NUMBER	QTY	REV.REF.CODE FROM	REV.REF.CODE UP TO
FIG.	35-07 BRAKE BAND & MULTIPLE DISC CLUTCH (ATM)						
	35602 PISTON SUB-ASSY, FRONT CLUTCH						
8510-	HJ60••ATM			35602-36010-	1	567	
	35602E RING, O (FOR FRONT CLUTCH PISTON)						
8510-	HJ60••ATM	INNER		90301-62004-	1	567	
8510-	HJ60••ATM	OUTER		90301-99027-	1	567	
	35606 PISTON SUB-ASSY, REAR CLUTCH						
8510-	HJ60••ATM			35606-36010-	1	567	
	35606F RING, O (FOR REAR CLUTCH PISTON)						
8510-	HJ60••ATM	INNER		90301-62004-	1	567	
8510-	HJ60••ATM	OUTER		90301-99028-	1	567	
	35610B SPRING, COMPRESSION (FOR FRONT CLUTCH PISTON RETURN)						
8510-	HJ60••ATM			90501-10092-	22	567	
	35610C RING, SHAFT SNAP (FOR FRONT CLUTCH PISTON RETURN SPRING)						
8510-	HJ60••ATM			90520-50001-	1	567	
	35615B SEAT, FRONT CLUTCH PISTON RETURN SPRING						
8510-	HJ60••ATM			35615-36010-	1	567	
	35631B BEARING, THRUST (FOR FRONT CLUTCH HUB)						
8510-	HJ60••ATM			90374-34001-	1	567	
	35631C RACE, THRUST BEARING (FOR FRONT CLUTCH HUB FRONT)						
8510-	HJ60••ATM			35789-36090-	1	567	
	35631D RACE, THRUST BEARING (FOR FRONT CLUTCH HUB REAR)						
8510-	HJ60••ATM			35789-36090-	1	567	
	35631E HUB, FRONT CLUTCH						
8510-	HJ60••ATM			35631-36010-	1	567	
	35633 DISC, CLUTCH (FOR FRONT CLUTCH)						
8510-	HJ60••ATM			35633-36020-	6	567	

PROD.DATE	MODELS	DESCRIPTION	R/P	PART NUMBER	QTY	REV.REF.CODE FROM	REV.REF.CODE UP TO
	35634 PLATE, FRONT CLUTCH						
8510-	HJ60••ATM	T=1.8		35634-36010-	6	567	
8510-	HJ60••ATM	T=2.4		35634-36020-	1	567	
8510-	HJ60••ATM	T=3.0		35634-36040-	1	567	
8510-	HJ60••ATM	T=2.2		35634-36050-	1	567	
	35650A RING, SHAFT SNAP (FOR REAR CLUTCH PISTON RETURN SPRING)						
8510-	HJ60••ATM			90520-50001-	1	567	
	35650B SPRING, COMPRESSION (FOR REAR CLUTCH PISTON RETURN)						
8510-	HJ60••ATM			90501-10108-	22	567	
	35651 DRUM, REAR CLUTCH						
8510-	HJ60••ATM			35651-36010-	1	567	
	35651A RACE, THRUST BEARING (FOR REAR CLUTCH DRUM)						
8510-	HJ60••ATM			35789-36020-	1	567	
	35651B BEARING, THRUST NEEDLE ROLLER (FOR REAR CLUTCH DRUM)						
8510-	HJ60••ATM			90374-34001-	1	567	
	35654 HUB, REAR CLUTCH						
8510-	HJ60••ATM			35654-36010-	1	567	
	35654A RING, HOLE SNAP (FOR REAR CLUTCH HUB)						
8510-	HJ60••ATM			90521-99017-	1	567	
	35655 SEAT, REAR CLUTCH PISTON RETURN SPRING						
8510-	HJ60••ATM			35615-36010-	1	567	
	35672 PLATE, CLUTCH CUSHION						
8510-	HJ60••ATM			35672-36010-	1	567	
	35673 DISC, REAR CLUTCH						
8510-	HJ60••ATM			35633-36020-	5	567	
	35674 PLATE, REAR CLUTCH						
8510-	HJ60••ATM			35634-36010-	5	567	

PROD.DATE	MODELS	DESCRIPTION	R/P	PART NUMBER	QTY	REV.REF.CODE FROM	REV.REF.CODE UP TO
	35675 FLANGE, REAR CLUTCH						
8510-	HJ60••ATM	T=5.0		35675-36010-	1	567	
8510-	HJ60••ATM	T=5.2		35675-36020-	1	567	
8510-	HJ60••ATM	T=5.4		35675-36030-	1	567	
8510-	HJ60••ATM	T=5.6		35675-36040-	1	567	
	35675E RING, HOLE SNAP (FOR REAR CLUTCH FLANGE)						
8510-	HJ60••ATM			90521-99017-	1	567	
	35701 SHAFT SUB-ASSY, INPUT						
8510-	HJ60••ATM			35701-60010-	1	567	
	35701C RACE, THRUST BEARING (FOR INPUT SHAFT REAR)						
8510-	HJ60••ATM			35789-36020-	1	567	
	35701Q RACE, THRUST BEARING (FOR INPUT SHAFT FRONT)						
8510-	HJ60••ATM	T=0.9		35789-36100-	1	567	
8510-	HJ60••ATM	T=1.2		35789-36110-	1	567	
8510-	HJ60••ATM	T=1.5		35789-36120-	1	567	
8510-	HJ60••ATM	T=1.8		35789-36130-	1	567	
8510-	HJ60••ATM	T=2.1		35789-36140-	1	567	
	35712A RING, INPUT SHAFT OIL SEAL						
8510-	HJ60••ATM			35712-36010-	1	567	

FIG.35-08 CENTER SUPPORT & PLANETARY SUN GEAR (ATM)

2-H4

MR4-13-0226

(8510-)

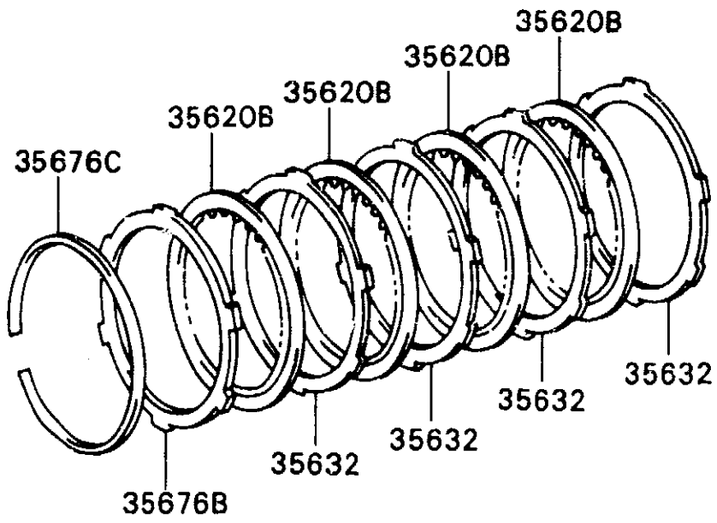

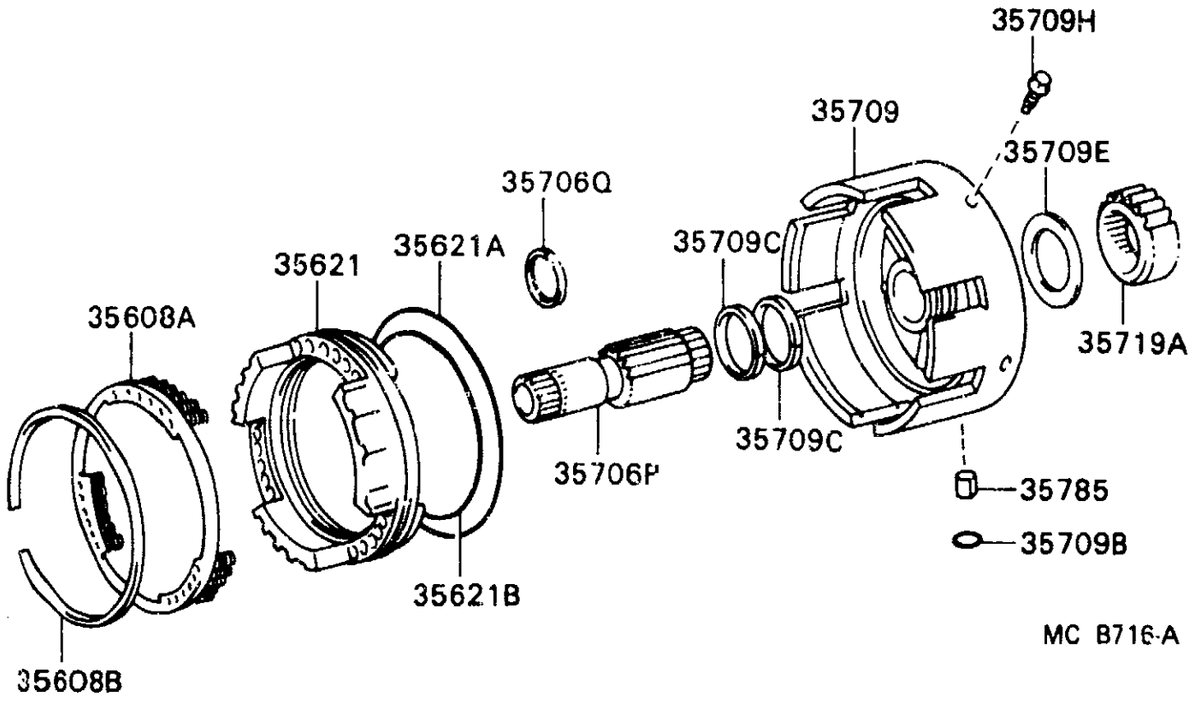

MC B716-A

GENUINE TOYOTA PARTS

PROD.DATE	MODELS	DESCRIPTION	R/P	PART NUMBER	QTY	REV.REF.CODE FROM	REV.REF.CODE UP TO
FIG.	35-08 CENTER SUPPORT & PLANETARY SUN GEAR (ATM)						
	35608A SPRING SUB-ASSY, BRAKE PISTON RETURN						
8510-	HJ60..ATM			35608-36010-	1	567	
	35608B RING, HOLE SNAP (FOR BRAKE PISTON RETURN SPRING)						
8510-	HJ60..ATM			90521-99021-	1	567	
	35620B DISC, CLUTCH (FOR BRAKE)						
8510-	HJ60..ATM			35633-36010-	4	567	
	35621 PISTON, BRAKE, NO.1						
8510-	HJ60..ATM			35621-36010-	1	567	
	35621A RING, O (FOR BRAKE PISTON OUTER)						
8510-	HJ60..ATM			90301-99031-	1	567	
	35621B RING, O (FOR BRAKE PISTON INNER)						
8510-	HJ60..ATM			90301-99030-	1	567	
	35632 PLATE, BRAKE						
8510-	HJ60..ATM			35632-36010-	4	567	
	35676B FLANGE, BRAKE, NO.1						
6510-	HJ60..ATM	T=5.0		35676-36010-	1	567	
8510-	HJ60..ATM	T=5.2		35676-36020-	1	567	
8510-	HJ60..ATM	T=5.4		35676-36030-	1	567	
8510-	HJ60..ATM	T=5.6		35676-36040-	1	567	
	35676C RING, HOLE SNAP (FOR BRAKE FLANGE NO.1)						
8510-	HJ60..ATM			90521-99021-	1	567	
	35706P GEAR SUB-ASSY, FRONT PLANETARY SUN						
8510-	HJ60..ATM			35706-60010-	1	567	
	35706Q RING, SHAFT SNAP (FOR FRONT PLANETARY SUN GEAR)						
8510-	HJ60..ATM			90520-33009-	1	567	

PROD.DATE	MODELS	DESCRIPTION	R/P	PART NUMBER	QTY	REV.REF.CODE FROM	REV.REF.CODE UP TO
	35709 SUPPORT SUB-ASSY, CENTER						
8510-	HJ60..ATM			35709-36010-	1	567	
	35709B RING, O (FOR CENTER SUPPORT)						
8510-	HJ60..ATM			90301-09008-	3	567	
	35709C RING, OIL SEAL (FOR CENTER SUPPORT)						
8510-	HJ60..ATM			35617-36020-	2	567	
	35709E WASHER (FOR CENTER SUPPORT)						
8510-	HJ60..ATM	T=1.8		90209-52001-	1	567	
8510-	HJ60..ATM	T=2.1		90209-52002-	1	567	
8510-	HJ60..ATM	T=2.4		90209-52003-	1	567	
8510-	HJ60..ATM	T=2.7		90209-52004-	1	567	
	35709H BOLT (FOR CENTER SUPPORT)						
8510-	HJ60..ATM			90105-10096-	3	567	
	35719A GEAR, REAR PLANETARY SUN						
8510-	HJ60..ATM			35719-60010-	1	567	
	35785 RETAINER, CENTER SUPPORT RING						
8510-	HJ60..ATM			35785-36010-	3	567	

PROD.DATE	MODELS	DESCRIPTION	R/P	PART NUMBER	QTY	REV.REF.CODE FROM	REV.REF.CODE UP TO

FIG.35-09 BRAKE NO.3, 1ST & REVERSE BRAKE (ATM)

2-J4

MR4-13-0227

(8510-)

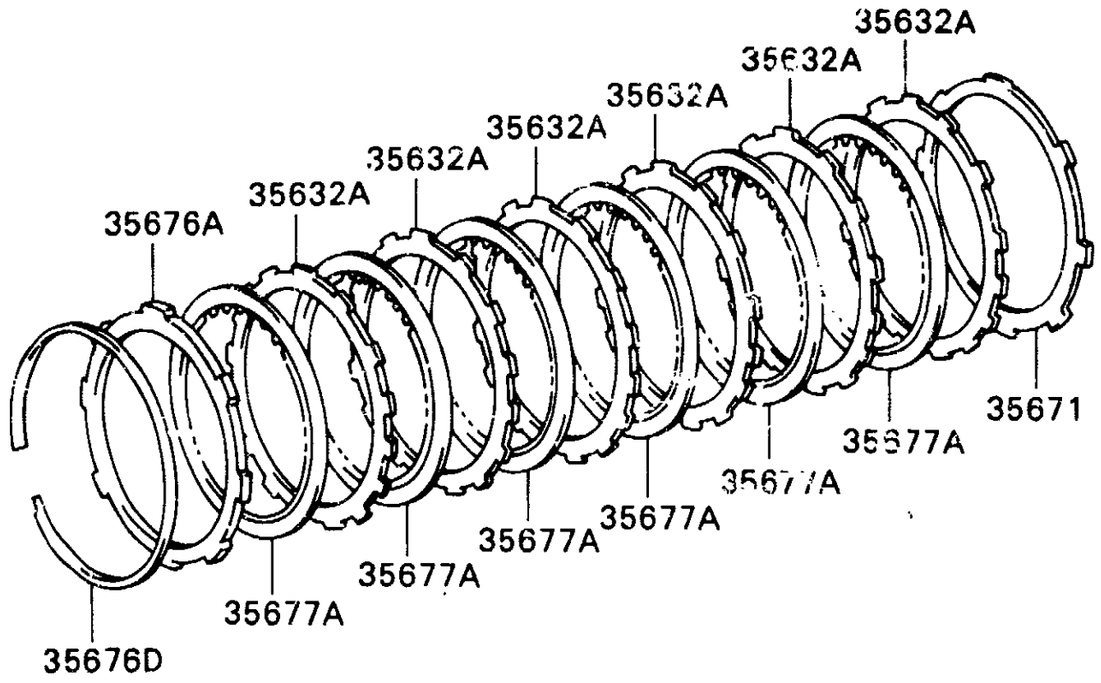

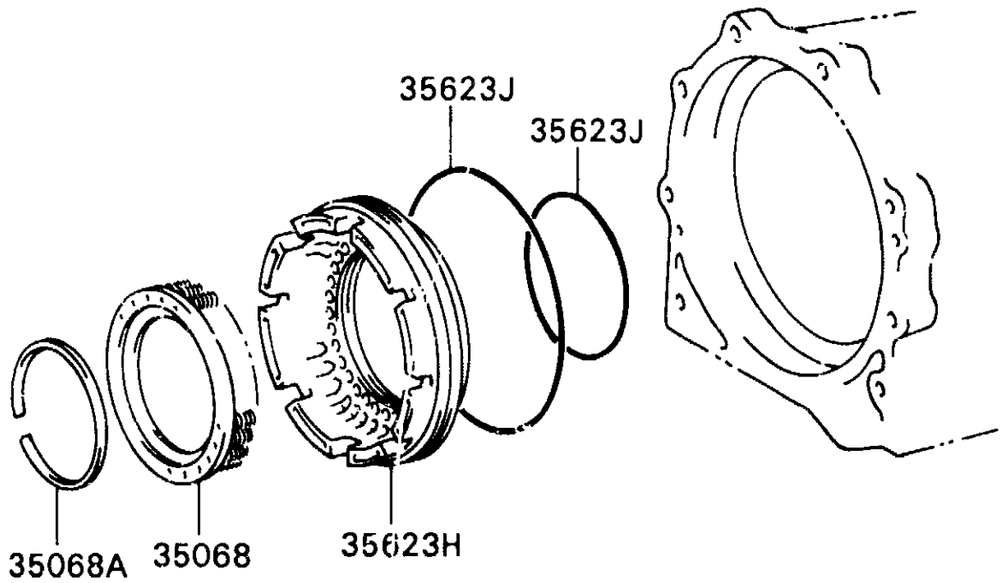

MC B717

GENUINE TOYOTA PARTS

	PROD.DATE	MODELS	DESCRIPTION	R/P	PART NUMBER	QTY	REV.REF.CODE FROM	REV.REF.CODE UP TO
	FIG.	35-09 BRAKE NO.3, 1ST & REVERSE BRAKE (ATM)						
		35068 SPRING SUB-ASSY, 1ST & REVERSE BRAKE RETURN						
	8510-	HJ60..ATM			35068-36010-	1	567	
		35068A RING, SHAFT SNAP (FOR 1ST & REVERSE BRAKE RETURN SPRING)						
	8510-	HJ60..ATM			90520-87001-	1	567	
		35623H PISTON, 1ST & REVERSE BRAKE						
	8510-	HJ60..ATM			35623-36010-	1	567	
		35623J RING, O (FOR 1ST & REVERSE BRAKE)						
	8510-	HJ60..ATM	INNER		90301-94002-	1	567	
C	8510-	HJ60..ATM	OUTER		90301-99030-	1	567	
		35632A PLATE, BRAKE (FOR 1ST & REVERSE BRAKE)						
	8510-	HJ60..ATM			35632-36020-	6	567	
		35671 PLATE, BRAKE CUSHION						
	8510-	HJ60..ATM			35671-36010-	1	567	
		35676A FLANGE,BRAKE (FOR 1ST & REVERSE BRAKE)						
	8510-	HJ60..ATM	T=6.65		35676-36070-	1	567	
	8510-	HJ60..ATM	T=7.05		35676-36080-	1	567	
	8510-	HJ60..ATM	T=7.45		35676-36090-	1	567	
		35676D RING, HOLE SNAP (FOR 1ST & REVERSE BRAKE FLANGE)						
	8510-	HJ60..ATM			90521-99021-	1	567	
		35677A DISC, CLUTCH (FOR 1ST & REVERSE BRAKE)						
	8510-	HJ60..ATM			35633-36030-	6	567	

FIG.35-10 PLANETARY GEAR, REVERSE PISTON & COUNTER GEAR(ATM)

2-K4

GENUINE TOYOTA PARTS

(8510-)

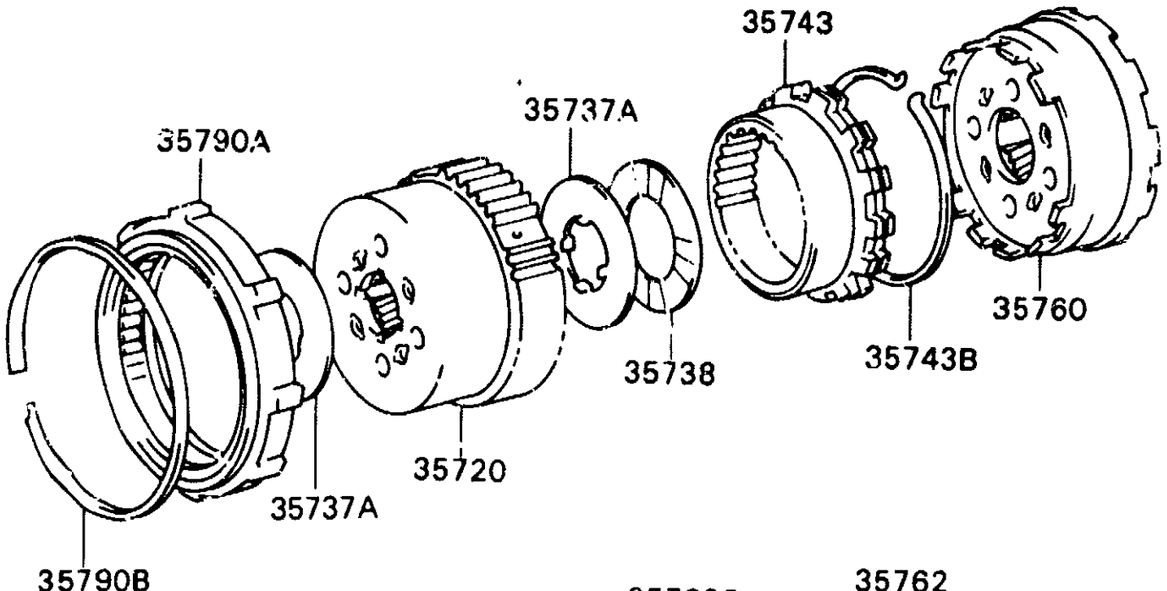

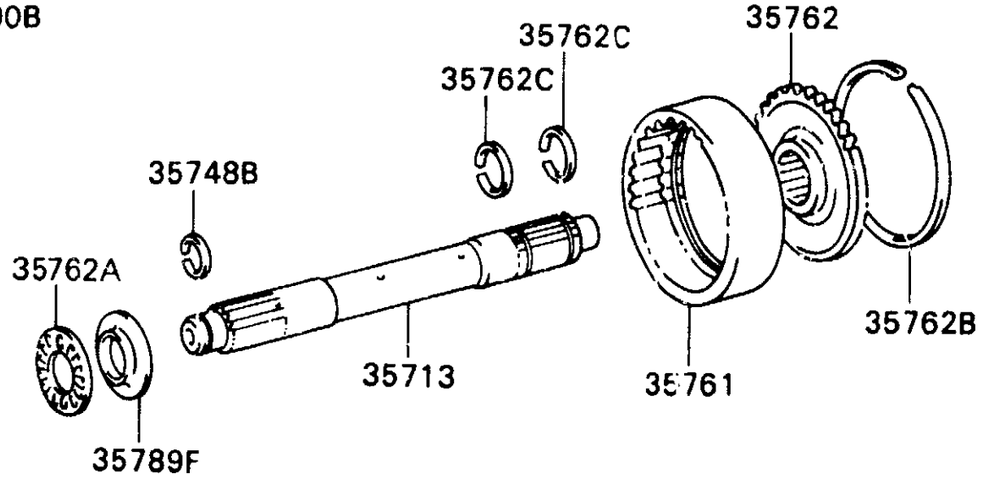

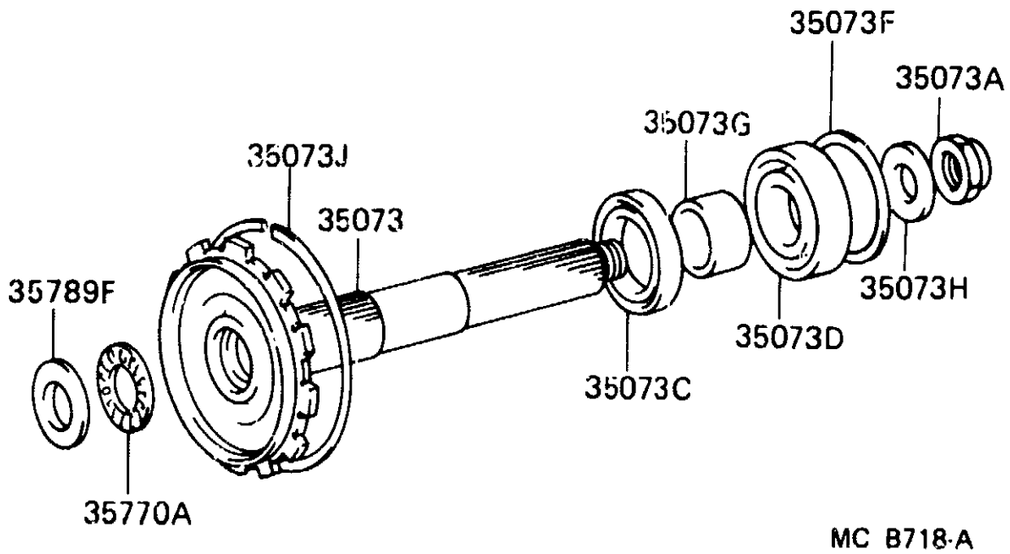

MC B718-A

	PROD.DATE	MODELS	DESCRIPTION	R/P	PART NUMBER	QTY	REV.REF.CODE FROM	REV.REF.CODE UP TO
	FIG.	35-10 PLANETARY GEAR, REVERSE PISTON & COUNTER GEAR(ATM)						
		35073 SHAFT SUB ASSY, OUTPUT						
	8510-	HJ60••ATM			35073-60010-	1	567	
		35073A NUT (FOR OUTPUT SHAFT)						
C	8510-8603	HJ60••ATM			90179-26002-	1	567	
C	8603-	HJ60••ATM			90179-26004-	1		
		35073C BEARING, RADIAL BALL (FOR OUTPUT SHAFT FRONT)						
	8510-	HJ60••ATM			90363-45008-	1	567	
		35073D BEARING, RADIAL BALL (FOR OUTPUT SHAFT REAR)						
	8510-	HJ60••ATM			90363-35022-	1	567	
		35073F SPACER (FOR OUTPUT SHAFT REAR BEARING)						
	8510-	HJ60••ATM	T=2.3		90560-72001-	1	567	
	8510-	HJ60••ATM	T=2.4		90560-72002-	1	567	
	8510-	HJ60••ATM	T=2.5		90560-72003-	1	567	
		35073G SPACER (FOR OUTPUT SHAFT						
	8510-	HJ60••ATM			90560-35009-	1	567	
		35073H WASHER, PLATE (FOR OUTPUT SHAFT)						
C	8510-8603	HJ60••ATM			90201-26003-	1	567	
		35073J RING, HOLE SNAP (FOR OUTPUT SHAFT)						
	8510-	HJ60••ATM			90521-99042-	1	567	
		35713 SHAFT, INTERMEDIATE						
	8510-	HJ60••ATM			35713-36010-	1	567	
		35720 GEAR ASSY, FRONT PLANETARY						
	8510-	HJ60••ATM			35720-60010-	1	567	
		35737A WASHER, PLANETARY CARRIER THRUST, NO.1						
	8510-	HJ60••ATM			35737-36010-	2	567	

PROD.DATE	MODELS	DESCRIPTION	R/P	PART NUMBER	QTY	REV.REF.CODE FROM	REV.REF.CODE UP TO
	35738	WASHER, PLANETARY CARRIER THRUST, NO.2					
8510-	HJ60..ATM			35738-60010-	1	567	
	35743	GEAR, FRONT PLANETARY RING					
8510-	HJ60..ATM			35743-60010-	1	567	
	35743B	RING, HOLE SNAP (FOR FRONT PLANETARY RING GEAR)					
8510-	HJ60..ATM			90521-99040-	1	567	
	35748B	RING, INTERMEDIATE SHAFT OIL SEAL					
8510-	HJ60..ATM			35748-36010-	1	567	
	35760	GEAR ASSY, REAR PLANETARY					
8510-	HJ60..ATM			35760-60010-	1	567	
	35761	GEAR, REAR PLANETARY RING					
8510-	HJ60..ATM			35761-60010-	1	567	
	35762	FLANGE, REAR PLANETARY RING GEAR					
8510-	HJ60..ATM			35762-60010-	1	567	
	35762A	BEARING, THRUST NEEDLE ROLLER (FOR REAR PLANETARY FLANGE)					
8510-	HJ60..ATM			90374-34001-	1	567	
	35762B	RING, HOLE SNAP (FOR REAR PLANETARY RING GEAR FLANGE)					
8510-	HJ60..ATM			90521-99041-	1	567	
	35762C	RING, SHAFT SNAP (FOR REAR PLANETARY RING GEAR)					
8510-	HJ60..ATM			90520-22013-	2	567	
	35770A	BEARING, THRUST (FOR OUTPUT SHAFT)					
8510-	HJ60..ATM			90374-34001-	1	567	
	35789F	RACE, THRUST BEARING (FOR REAR PLANETARY FLANGE)					
8510-	HJ60..ATM			35789-36090-	1	567	
	35790A	CLUTCH ASSY, 1 WAY					
8510-	HJ60..ATM			35790-36010-	1	567	

PROD.DATE	MODELS	DESCRIPTION	R/P	PART NUMBER	QTY	REV.REF.CODE FROM	REV.REF.CODE UP TO
	35790B	RING, HOLE SNAP (FOR 1 WAY CLUTCH)					
8510-	HJ60..ATM			90521-99021-	1	567	

MR4-13-0229

FIG.35-11 REAR OIL PUMP & GOVERNOR (ATM)

(8510-)

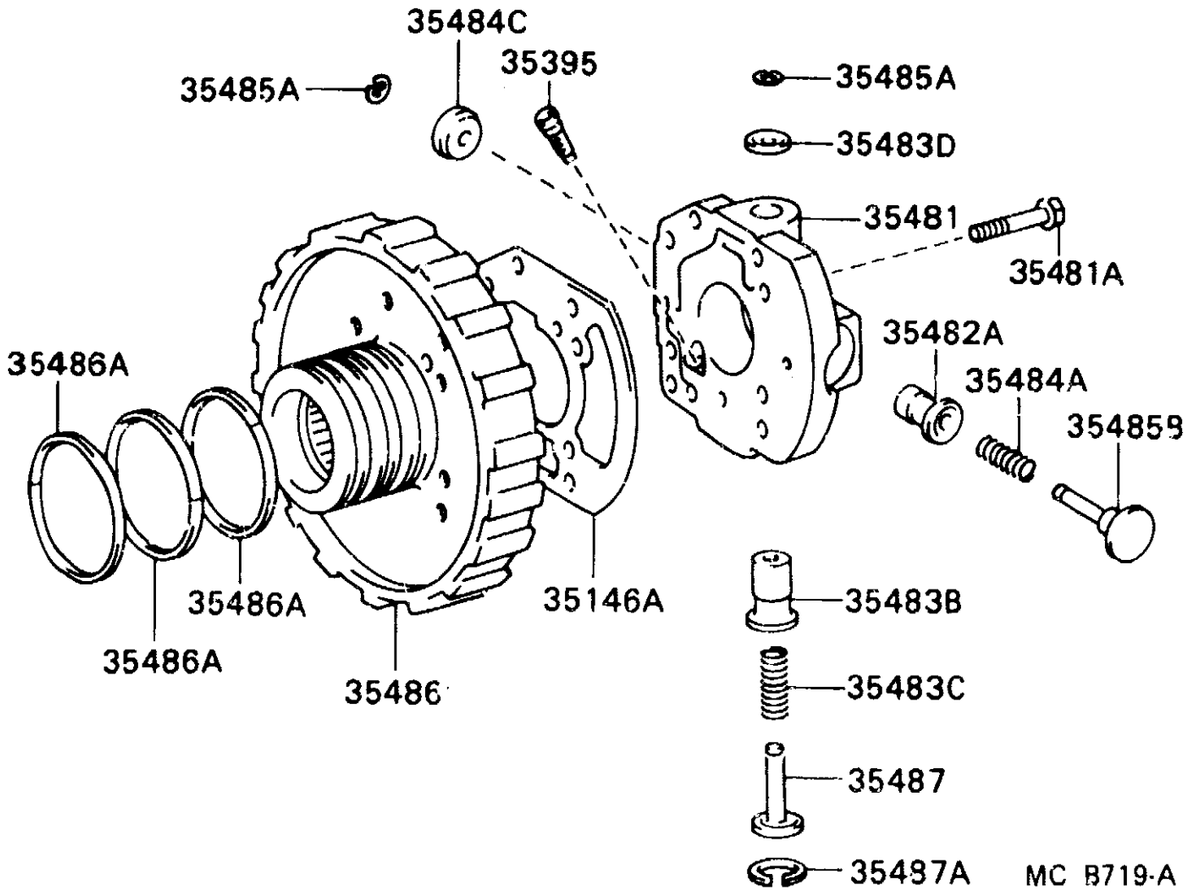

GENUINE TOYOTA PARTS

PROD.DATE	MODELS	DESCRIPTION	R/P	PART NUMBER	QTY	REV.REF.CODE FROM	REV.REF.CODE UP TO
FIG.	35-11 REAR OIL PUMP & GOVERNOR (ATM)						
	35146A	GASKET, GOVERNOR BODY					
8510-	HJ60••ATM			35146-36010-	1	567	
	35395	STRAINER, GOVERNOR OIL					
8510-	HJ60••ATM			35395-36010-	1	567	
	35481	BODY, GOVERNOR					
8510-	HJ60••ATM			35481-36010-	1	567	
	35481A	BOLT (FOR GOVERNOR BODY)					
8510-	HJ60••ATM			90105-06069-	8	567	
	35482A	VALVE, GOVERNOR, NO.1					
8510-	HJ60••ATM			35482-36010-	1	567	
	35483B	VALVE, GOVERNOR, NO.2					
8510-	HJ60••ATM			35483-36010-	1	567	
	35483C	SPRING, COMPRESSION (FOR GOVERNOR VALVE NO.2)					
8510-	HJ60••ATM			90501-12081-	1	567	
	35483D	SPACER (FOR GOVERNOR VALVE NO.2)					
8510-	HJ60••ATM			90561-06006-	1	567	
	35484A	SPRING, COMPRESSION (FOR GOVERNOR WEIGHT)					
8510-	HJ60••ATM			90501-07038-	1	567	
	35484C	WEIGHT, GOVERNOR					
8510-	HJ60••ATM			35484-36010-	1	567	
	35485A	RING, E (FOR GOVERNOR VALVE SHAFT)					
8510-	HJ60••ATM			90523-05002-	2	567	
	35485B	SHAFT, GOVERNOR VALVE, NO.1					
8510-	HJ60••ATM			35485-36010-	1	567	

FIG.35-11 **GENUINE TOYOTA PARTS** 2-A5 **GENUINE TOYOTA PARTS**

PROD.DATE	MODELS	DESCRIPTION	R/P	PART NUMBER	QTY	REV.REF.CODE FROM	REV.REF.CODE UP TO
	35486	SUPPORT, GOVERNOR BODY					
8510-	HJ60..ATM			35486-36010-	1	567	
	35486A	RING (FOR GOVERNOR BODY SUPPORT)					
8510-	HJ60..ATM			35735-36010-	3	567	
	35487	SHAFT, GOVERNOR VALVE, NO.2					
8510-	HJ60..ATM			35487-36010-	1	567	
	35487A	RING, SNAP (FOR GOVERNOR VALVE SHAFT NO.2)					
8510-	HJ60..ATM			96151-02500-	1	567	

PROD.DATE	MODELS	DESCRIPTION	R/P	PART NUMBER	QTY	REV.REF.CODE FROM	REV.REF.CODE UP TO

FIG.35-12 VALVE BODY & OIL STRAINER (ATM)

2-B5

MR4-11-0627

(8510-)

ILLUST.NO. 10F5

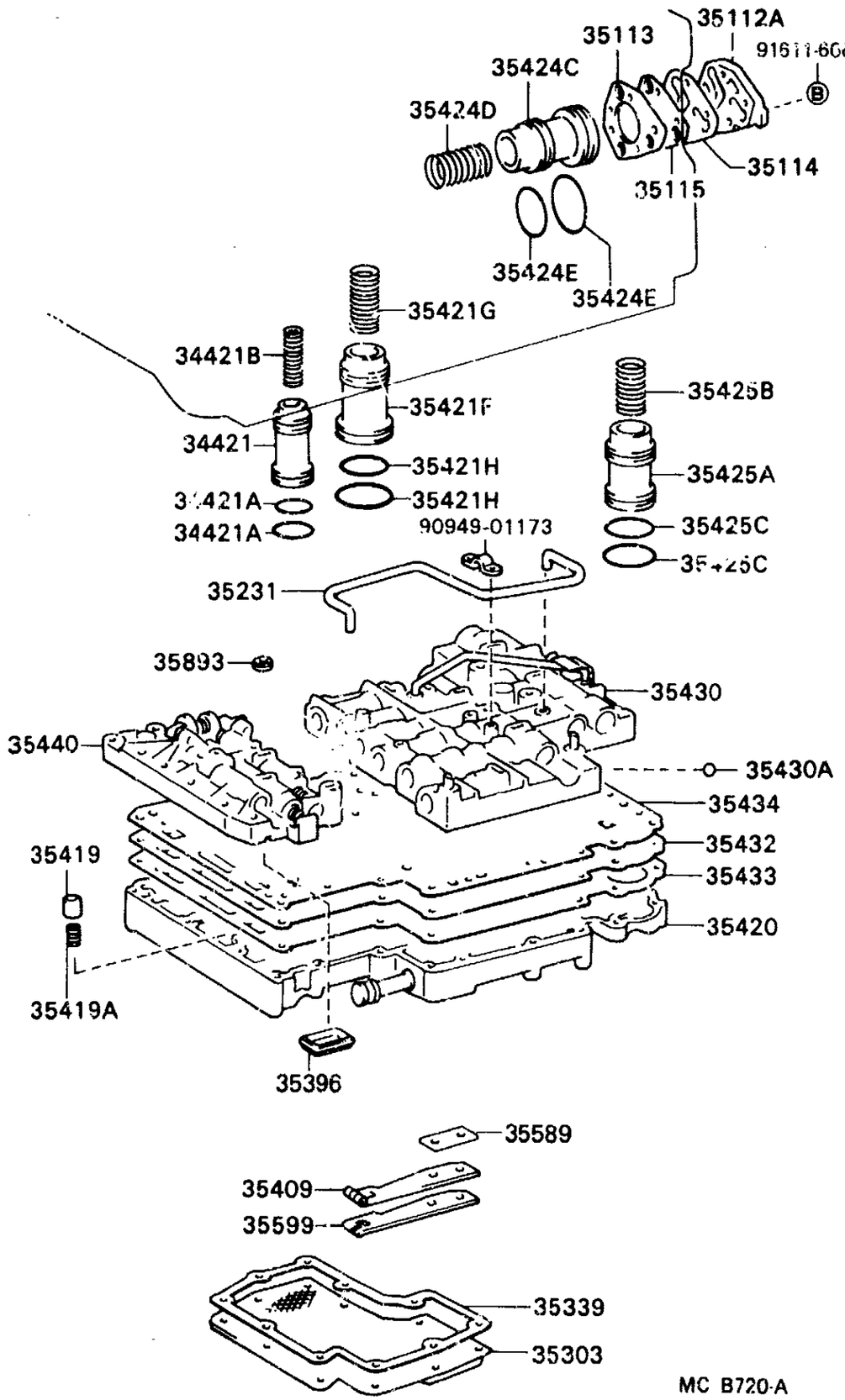

MC B720-A

(8510-)

ILLUST.NO. 20F5

Front Upper Value Body

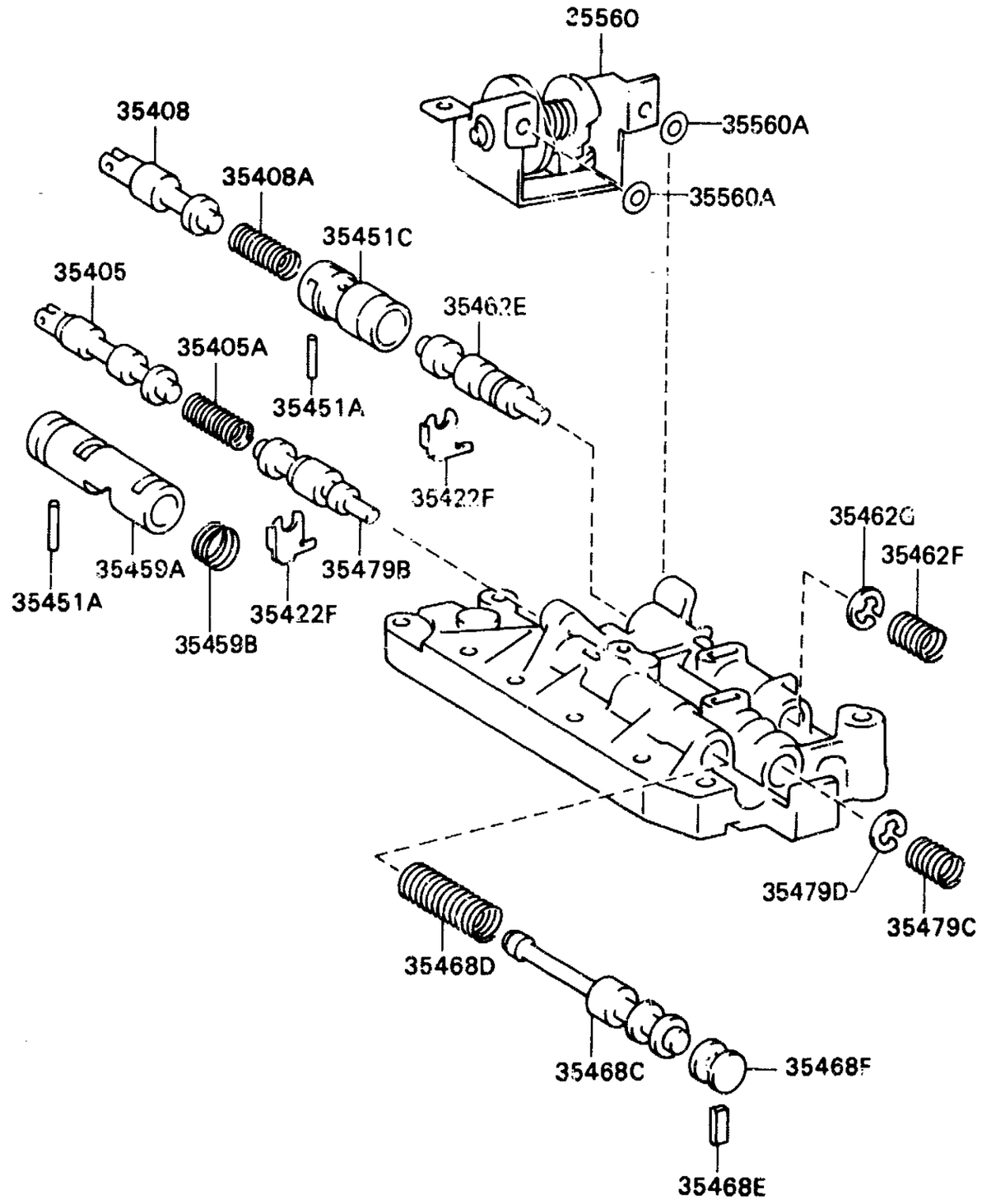

MC B721-B

(8510-)

ILLUST.NO. 3OF5

RR UPR

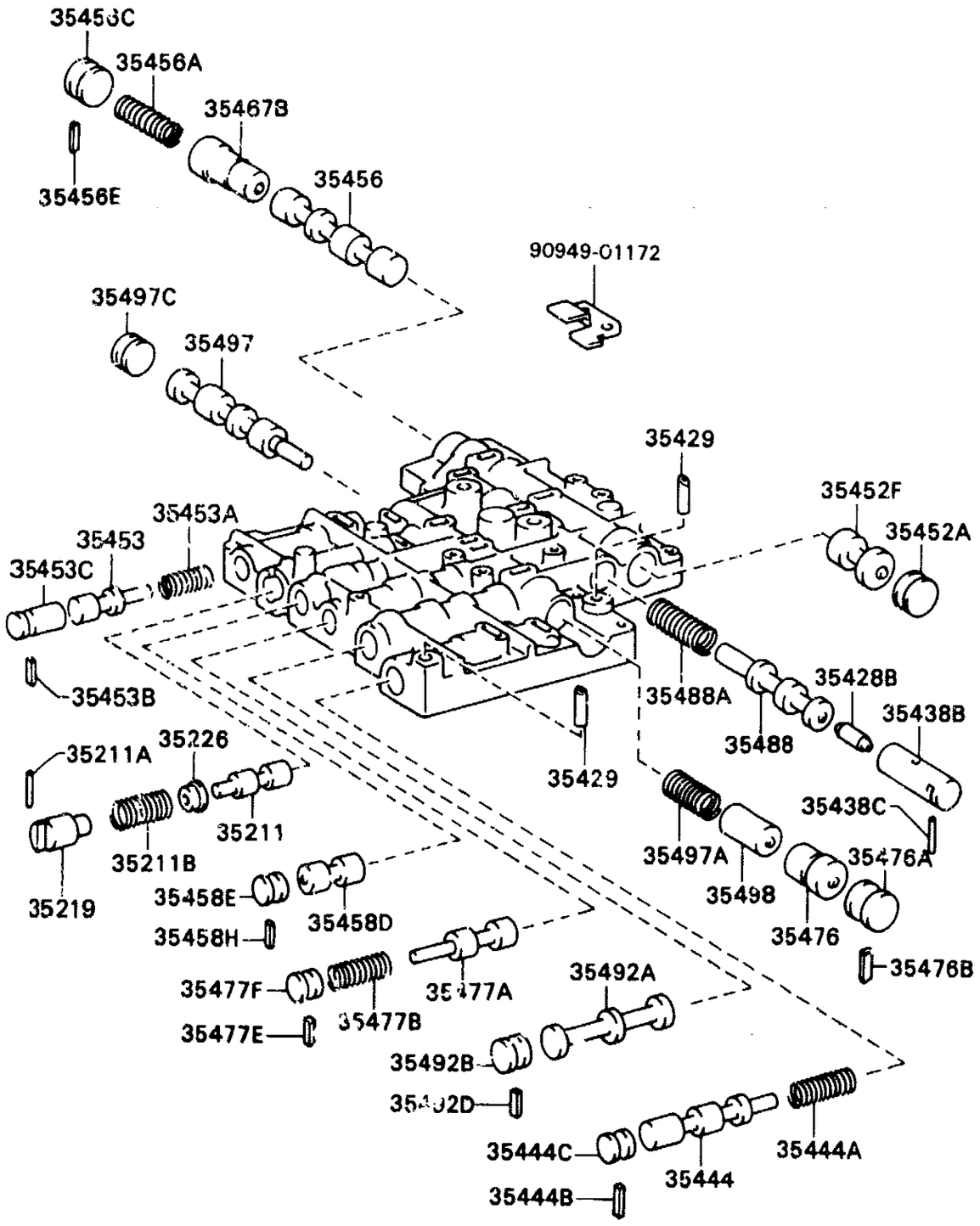

MC B722-B

(8510-)

ILLUST.NO. 4OF5

Lower Valve Body

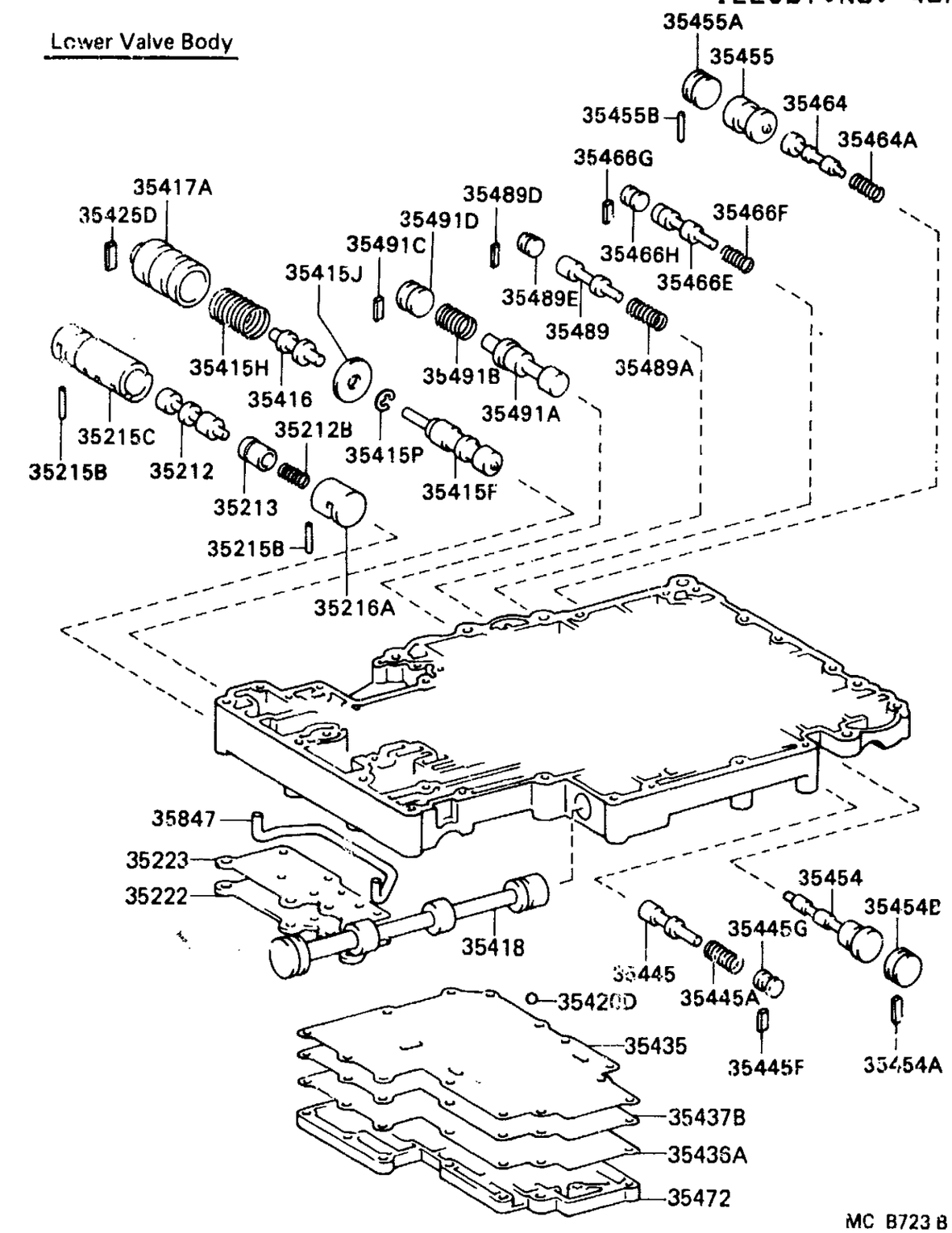

MC B723 B

MCB722B

MCB723B

(8510-)

ILLUST.NO. 5OF5

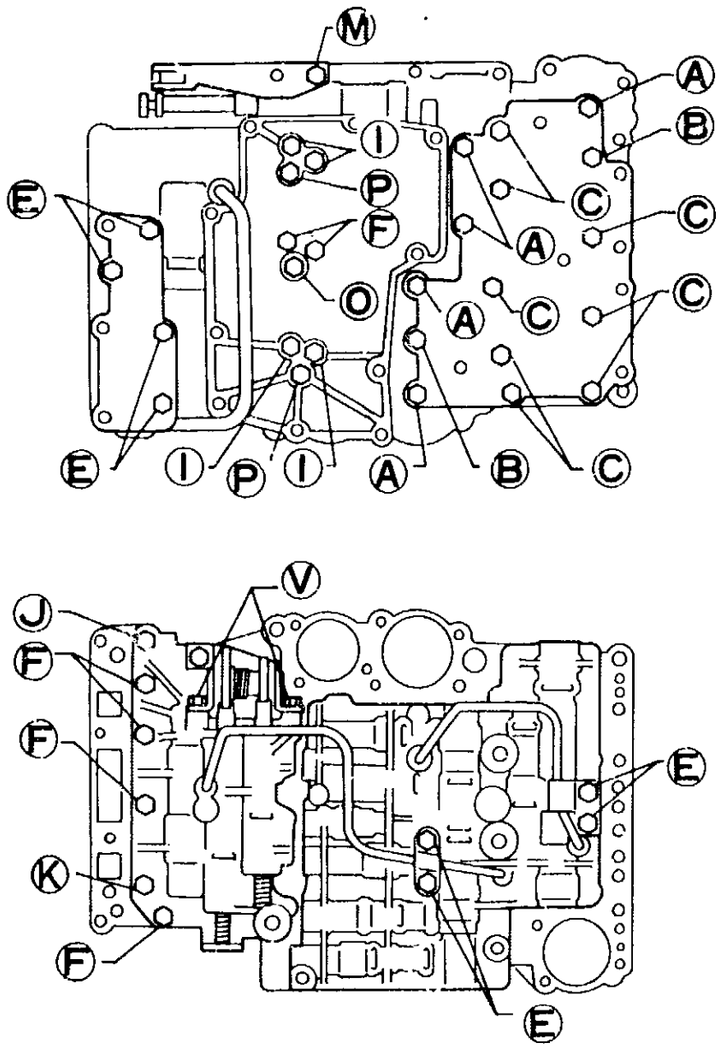

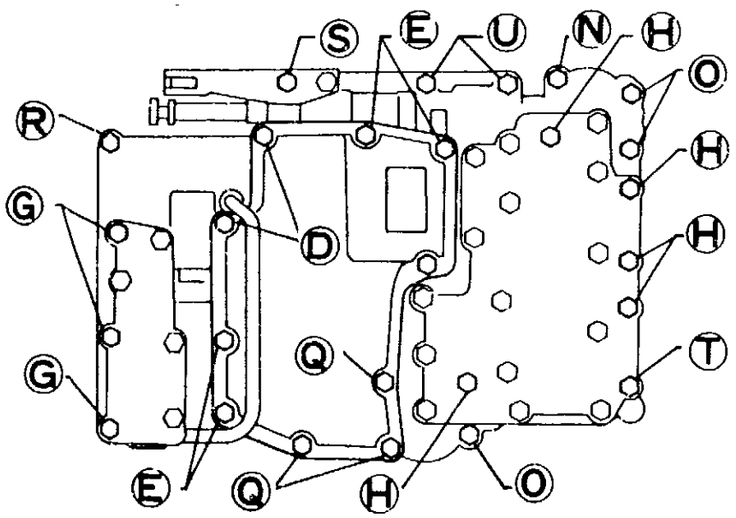

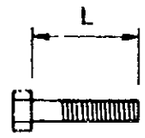

NO.	PARTS NO.	L	QTY.
A	90105-05007	18	5
B	90105-05015	60	2
C	90105-05016	56	8
D	90105-05017	47	3
E	90105-05023	12	12
F	90105-05025	29.5	7
G	90105-06058	64	3
H	90105-06060	57	5
I	90105-05002	35	4
J	90105-05029	25	1
K	90105-05027	29.5	1
L	90105-05028	39	1
M	90105-05030	43	1
N	90105-06069	22	1
O	90105-06072	32	4
P	90105-06025	36	2
Q	90105-06061	45	3
R	90105-06070	41	1
S	90105-06073	45	1
T	90105-06071	57	1
U	90105-05018	44	2
V	90105-06064	16	2

MC 8878-A

GENUINE TOYOTA PARTS

PROD.DATE	MODELS	DESCRIPTION	R/P	PART NUMBER	QTY	REV.REF.CODE FROM	REV.REF.CODE UP TO
FIG.	35-12 VALVE BODY & OIL STRAINER (ATM)						
	34421 PISTON, OVERDRIVE BRAKE ACCUMULATOR						
8510-	HJ60••ATM			34421-36010-	1	567	
	34421A RING, O (FOR OVERDRIVE BRAKE ACCUMULATOR PISTON)						
8510-	HJ60••ATM		UPR	90301-26003-	1	567	
8510-	HJ60••ATM		LWR	90301-29003-	1	567	
	34421B SPRING (FOR OVERDRIVE BRAKE ACCUMULATOR PISTON)						
8510-	HJ60••ATM			90501-32013-	1	567	
	35112A COVER, FRONT CLUTCH ACCUMULATOR						
8510-	HJ60••ATM			35112-36010-	1	567	
	35113 GASKET, FRONT CLUTCH ACCUMLATOR, NO.2						
8510-	HJ60••ATM			35113-36010-	1	567	
	35114 GASKET, FRONT CLUTCH ACCUMLATOR, NO.1						
8510-	HJ60••ATM			35114-36010-	1	567	
	35115 PLATE, FRONT CLUTCH ACCUMULATOR						
8510-	HJ60••ATM			35115-36010-	1	567	
	35211 VALVE, LOCK UP SIGNAL						
8510-	HJ60••ATM			35211-36010-	1	567	
	35211A PIN, STRAIGHT (FOR LOCK UP SIGNAL VALVE)						
8510-	HJ60••ATM			90250-03051-	1	567	
	35211B SPRING, COMPRESSION (FOR LOCK UP SIGNAL VALVE)						
8510-	HJ60••ATM			90501-12094-	1	567	
	35212 VALVE, LOCK UP RELAY						
8510-	HJ60••ATM			35212-36010-	1	567	
	35212B SPRING, COMPRESSION (FOR LOCK UP RELAY VALVE)						
8510-	HJ60••ATM			90501-11024-	1	567	

PROD.DATE	MODELS	DESCRIPTION	R/P	PART NUMBER	QTY	REV.REF.CODE FROM	REV.REF.CODE UP TO
	35213	VALVE, LOCK UP RELAY CONTROL					
8510-	HJ60••ATM			35213-36010-	1	567	
	35215B	PIN, STRAIGHT (FOR LOCK UP RELAY VALVE SLEEVE)					
8510-	HJ60••ATM	SLEEVE NO.2 SIDE		90250-03051-	1	567	
8510-	HJ60••ATM	SLEEVE NO.1 SIDE		90250-04054-	1	567	
	35215C	SLEEVE, LOCK UP RELAY VALVE, NO.1					
8510-	HJ60••ATM			35215-36010-	1	567	
	35216A	SLEEVE, LOCK UP RELAY VALVE, NO.2					
8510-	HJ60••ATM			35216-36010-	1	567	
	35219	PLUG, LOCK UP SIGNAL VALVE					
8510-	HJ60••ATM			35219-60010-	1	567	
	35222	PLATE, LOCK UP RELAY VALVE BODY					
8510-	HJ60••ATM			35222-60010-	1	567	
	35223	GASKET, LOCK UP RELAY VALVE BODY					
8510-	HJ60••ATM			35223-36010-	1	567	
	35226	SEAT, LOCK UP SIGNAL VALVE SPRING					
8510-	HJ60••ATM			35226-36010-	1	567	
	35231	TUBE, LOCK UP SIGNAL VALVE APPLY					
8510-	HJ60••ATM			35231-36010-	1	567	
	35303	STRAINER SUB-ASSY, OIL					
8510-	HJ60••ATM			35303-60010-	1	567	
	35339	GASKET, OIL STRAINER					
8510-	HJ60••ATM			35339-36010-	1	567	
	35396	STRAINER, THROTTLE OIL					
8510-	HJ60••ATM			35396-36010-	1	567	

GENUINE TOYOTA PARTS

PROD.DATE	MODELS	DESCRIPTION	R/P	PART NUMBER	QTY	REV.REF.CODE FROM	REV.REF.CODE UP TO
	35405	PLUG SUB-ASSY, SECONDARY DOWN SHIFT					
8510-	HJ60••ATM			35405-36010-	1	567	
	35405A	SPRING, COMPRESSION (FOR SECONDARY DOWN SHIFT PLUG)					
8510-	HJ60••ATM			90501-10093-	1	567	
	35408	PLUG SUB-ASSY, PRIMARY DOWN SHIFT					
8510-	HJ60••ATM			35408-36010-	1	567	
	35408A	SPRING, COMPRESSION (FOR PRIMARY DOWN SHIFT PLUG)					
8510-	HJ60••ATM			90501-11030-	1	567	
	35409	SPRING SUB-ASSY, MANUAL DETENT					
8510-	HJ60••ATM			35409-36010-	1	567	
	35415F	VALVE, PRIMARY REGULATOR					
8510-	HJ60••ATM			35415-36010-	1	567	
	35415H	SPRING, COMPRESSION (FOR PRIMARY REGULATOR VALVE)					
8510-	HJ60••ATM			90501-19002-	1	567	
	35415J	WASHER (FOR PRIMARY REGULATOR VALVE)					
8510-	HJ60••ATM			90201-06566-	1	567	
	35415P	RING, E (FOR PRIMARY REGULATOR VALVE)					
8510-	HJ60••ATM			90523-06004-	1	567	
	35416	PLUNGER, PRIMARY REGULATOR VALVE					
8510-	HJ60••ATM			35416-36010-	1	567	
	35417A	SLEEVE, PRIMARY REGULATOR VALVE					
8510-	HJ60••ATM			35417-36010-	1	567	
	35418	VALVE, MANUAL					
8510-	HJ60••ATM			35418-36010-	1	567	
	35419	VALVE, CHECK					
8510-	HJ60••ATM			35419-36010-	1	567	

GENUINE TOYOTA PARTS

PROD.DATE	MODELS	DESCRIPTION	R/P	PART NUMBER	QTY	REV.REF.CODE FROM	REV.REF.CODE UP TO
	35419A SPRING, COMPRESSION (FOR CHECK VALVE)						
8510-	HJ60••ATM			90501-10098-	1	567	
	35420 BODY ASSY, LOWER VALVE						
8510-	HJ60••ATM			35420-60011-	1	567	
	35420D BALL (FOR LOWER VALVE BODY)						
8510-	HJ60••ATM			90360-06004-	2	567	
	35421F PISTON, ACCUMULATOR, NO.2						
8510-	HJ60••ATM			35423-36010-	1	567	
	35421G SPRING, COMPRESSION (FOR ACCUMULATOR PISTON NO.2)						
8510-	HJ60••ATM			90501-40008-	1	567	
	35421H RING (FOR ACCUMULATOR PISTON NO.2)						
8510-	HJ60••ATM	UPR		90301-29003-	1	567	
8510-	HJ60••ATM	LWR		90301-37004-	1	567	
	35422F STOPPER, VALVE VIBRATING						
8510-	HJ60••ATM	SECONDARY THROTTLE VALVE		35422-22010-	1	567	
8510-	HJ60••ATM	PRIMARY THROTTLE VALVE		35422-36010-	1	567	
	35424C PISTON, C-1 ACCUMULATOR						
8510-	HJ60••ATM			35424-36010-	1	567	
	35424D SPRING, COMPRESSION (FOR C-1 ACCMULATOR PISTOM)						
8510-	HJ60••ATM			90501-27008-	1	567	
	35424E RING, O (FOR C-1 ACCUMULATOR PISTON)						
8510-	HJ60••ATM	FR		90301-22003-	1	567	
8510-	HJ60••ATM	RR		90301-24002-	1	567	
	35425A PISTON, C-2 ACCUMULATOR						
8510-	HJ60••ATM			35425-36010-	1	567	

PROD.DATE	MODELS	DESCRIPTION	R/P	PART NUMBER	QTY	REV.REF.CODE FROM	REV.REF.CODE UP TO
	35425B SPRING, COMPRESSION (FOR C-2 ACCMULATOR PISTOM)						
8510-	HJ60••ATM			90501-35009-	1	567	
	35425C RING, O (FOR C-2 ACCUMULATOR PISTON)						
8510-	HJ60••ATM	UPR		90301-28003-	1	567	
8510-	HJ60••ATM	LWR		90301-33006-	1	567	
	35425D SEAT, PRIMARY REGULATOR VALVE SLEEVE						
8510-	HJ60••ATM			35425-22010-	1	567	
	35428B PLUG, 2-3 SHIFT TIMING VALVE						
8510-	HJ60••ATM			35428-60010-	1	567	
	35429 TUBE, LINE PRESSURE						
8510-	HJ60••ATM			35429-36010-	2	567	
	35430 BODY ASSY, REAR UPPER VALVE						
8510-	HJ60••ATM			35430-60020-	1	567	
	35430A BALL (FOR REAR UPPER VALVE BODY)						
8510-	HJ60••ATM			90360-06004-	7	567	
	35432 PLATE, VALVE BODY						
8510-	HJ60••ATM			35432-60010-	1	567	
	35433 GASKET, VALVE BODY, NO.1						
8510-	HJ60••ATM			35433-36010-	1	567	
	35434 GASKET, VALVE BODY, NO.2						
8510-	HJ60••ATM			35434-36010-	1	567	
	35435 GASKET, VALVE BODY PLATE, NO.3						
8510-	HJ60••ATM			35435-36011-	1	567	
	35436A GASKET, VALVE BODY PLATE, NO.4						
8510-	HJ60••ATM			35436-36011-	1	567	

PROD.DATE	MODELS	DESCRIPTION	R/P	PART NUMBER	QTY	REV.REF.CODE FROM	REV.REF.CODE UP TO
	35437B	PLATE, VALVE BODY COVER					
8510-	HJ60••ATM			35437-36011-	1	567	
	35438B	SLEEVE, 2-3 SHIFT TIMING VALVE PLUG					
8510-	HJ60••ATM			35438-60010-	1	567	
	35438C	PIN, STRAIGHT (FOR 2-3 SHIFT TIMING VALVE PLUG SLEEVE)					
8510-	HJ60••ATM			90250-03051-	1	567	
	35440	BODY ASSY, FRONT UPPER VALVE					
8510-	HJ60••ATM			35440-36010-	1	567	
	35444	VALVE, INTERMEDIATE MODULATOR					
8510-	HJ60••ATM			35444-36010-	1	567	
	35444A	SPRING, COMPRESSION (FOR INTERMEDIATE MODULATOR VALVE)					
8510-	HJ60••ATM			90501-10107-	1	567	
	35444B	KEY, STRAIGHT (FOR INTERMEDIATE MODULATOR VALVE)					
8510-	HJ60••ATM			90282-03006-	1	567	
	35444C	PLUG (FOR INTERMEDIATE MODULATOR VALVE)					
8510-	HJ60••ATM			90339-04017-	1	567	
	35445	VALVE, LOW MODULATOR					
8510-	HJ60••ATM			35445-36010-	1	567	
	35445A	SPRING, COMPRESSION (FOR LOW MODULATOR VALVE)					
8510-	HJ60••ATM			90501-08061-	1	567	
	35445F	KEY, STRAIGHT (FOR LOW MODULATOR VALVE)					
8510-	HJ60••ATM			90282-03007-	1	567	
	35445G	PLUG (FOR LOW MODULATOR VALVE)					
8510-	HJ60••ATM			90339-04009-	1	567	
	35451A	PIN, STRAIGHT (FOR THROTTLE VALVE SLEEVE)					
8510-	HJ60••ATM			90250-03036-	2	567	

GENUINE TOYOTA PARTS

PROD.DATE	MODELS	DESCRIPTION	R/P	PART NUMBER	QTY	REV.REF.CODE FROM	REV.REF.CODE UP TO
	35451C	SLEEVE, THROTTLE VALVE, NO.1					
8510-	HJ60••ATM			35451-36010-	1	567	
	35452A	PLUG (FOR 2-3 SHIFT VALVE PLUG)					
8510-	HJ60••ATM			90339-05008-	1	567	
	35452F	PLUG, 2-3 SHIFT VALVE					
8510-	HJ60••ATM			35452-36010-	1	567	
	35453	VALVE, DETENT REGULATOR					
8510-	HJ60••ATM			35445-36010-	1	567	
	35453A	SPRING, COMPRESSION (FOR DETENT REGULATOR VALVE)					
8510-	HJ60••ATM			90501-09057-	1	567	
	35453B	KEY, STRAIGHT (FOR DETENT REGULATOR)					
8510-	HJ60••ATM			90282-03006-	1	567	
	35453C	PLUG (FOR DETENT REGULATOR)					
8510-	HJ60••ATM			90339-04015-	1	567	
	35454	VALVE, LOW COAST SHIFT					
8510-	HJ60••ATM			35454-36010-	1	567	
	35454A	KEY, STRAIGHT (FOR LOW COAST SHIFT VALVE)					
8510-	HJ60••ATM			90282-03006-	1	567	
	35454B	PLUG (FOR LOW COAST SHIFT VALVE)					
8510-	HJ60••ATM			90339-06004-	1	567	
	35455	PLUG, 1-2 SHIFT VALVE LOW					
8510-	HJ60••ATM			35455-36010-	1	567	
	35455A	PLUG (FOR 1-2 SHIFT VALVE LOW PLUG)					
8510-	HJ60••ATM			90339-06009-	1	567	
	35455B	PIN, STRAIGHT (FOR 1-2 SHIFT VALVE LOW PLUG)					
8510-	HJ60••ATM			90250-03050-	1	567	

	PROD.DATE	MODELS	DESCRIPTION	R/P	PART NUMBER	QTY	REV.REF.CODE FROM	REV.REF.CODE UP TO
		35456	VALVE, 2-3 SHIFT					
	8510-	HJ60••ATM			35456-36010--	1	567	
		35456A	SPRING, COMPRESSION (FOR 2-3 SHIFT VALVE)					
	8510-	HJ60••ATM			90501-11025-	1	567	
		35456C	PLUG (FOR 2-3 SHIFT VALVE)					
	8510-	HJ60••ATM			90339-04011-	1	567	
		35456E	PIN, STRAIGHT (FOR 2-3 SHIFT VALVE)					
	8510-	HJ60••ATM			90282-03006-	1	567	
		35458D	VALVE, CUT BACK					
	8510-	HJ60••ATM			35458-36010-	1	567	
		35458E	PLUG (FOR CUT BACK VALVE)					
	8510-	HJ60••ATM			90339-04017-	1	567	
		35458H	KEY, STRAIGHT (FOR CUT BACK VALVE)					
	8510-	HJ60••ATM			90282-03006-	1	567	
		35459A	SLEEVE, THROTTLE VALVE, NO.2					
	8510-	HJ60••ATM			35459-36010-	1	567	
		35459B	SPRING (FOR THROTTLE VALVE SLEEVE)					
	8510-	HJ60••ATM			90501-15006-	1	567	
		35462E	VALVE, PRIMARY THROTTLE					
	8510-	HJ60••ATM			35462-36010-	1	567	
		35462G	RING, E (FOR PRIMARY THROTTLE VALVE)					
	8510-	HJ60••ATM			90523-06005-	8	567	
		35463B	VALVE, 1-2 RELAY					
C	8510-	HJ60••ATM			35463-36010-	1	567	
		35463C	PIN,STRAIGHT (FOR 1-2 RELAY VALVE)					
C	8510-	HJ60••ATM			90250-03051-	1	567	
		35463D	PLUG (FOR 1-2 RELAY VALVE)					
C	8510-	HJ60••ATM			90339-04019-	1	567	
		35463E	SPRING, COMPRESSION (FOR 1-2 RELAY VALVE)					
C	8510-	HJ60••ATM			90501-06043-	1	567	
		35464	VALVE, 1-2 SHIFT					
	8510-	HJ60••ATM			35464-36011-	1	567	
		35464A	SPRING, COMPRESSION (FOR 1-2 SHIFT VALVE)					
	8510-	HJ60••ATM			90501-07040-	1	567	
		35466E	VALVE, 2ND LOCK					
	8510-	HJ60••ATM			35466-60010-	1	567	
		35466F	SPRING, COMPRESSION (FOR 2ND LOCK VALVE)					
	8510-	HJ60••ATM			90501-08062-	1	567	
		35466G	KEY, STRAIGHT (FOR 2ND LOCK VALVE)					
	8510-	HJ60••ATM			90282-03005-	1	567	
		35466H	PLUG (FOR 2ND LOCK VALVE)					
	8510-	HJ60••ATM			90339-04017-	1	567	
		35467B	VALVE, INTERMEDIATE COAST SHIFT					
	8510-	HJ60••ATM			35467-36010-	1	567	
		35468C	VALVE, SECONDARY REGULATOR					
	8510-	HJ60••ATM			35468-36010-	1	567	
		35468D	SPRING, COMPRESSION (FOR SECONDARY REGULATOR VALVE)					
	8510-	HJ60••ATM			90501-17008-	1	567	
		35468E	KEY, STRAIGHT (FOR SECONDARY REGULATOR VALVE)					
	8510-	HJ60••ATM			90282-03006-	1	567	
		35468F	PLUG (FOR SECONDARY REGULATOR VALVE)					
	8510-	HJ60••ATM			90339-04010-	1	567	

GENUINE TOYOTA PARTS

PROD.DATE	MODELS	DESCRIPTION	R/P	PART NUMBER	QTY	REV.REF.CODE FROM	REV.REF.CODE UP TO
	35472	COVER, VALVE BODY, NO.2					
8510-	HJ60..ATM			35472-36011-	1	567	
	35476	VALVE, 3RD COAST SHIFT					
8510-	HJ60..ATM			35476-36010-	1	567	
	35476A	PLUG, STRAIGHT (FOR 3RD COAST SHIFT)					
8510-	HJ60..ATM			90339-04012-	1	567	
	35476B	PIN, LOCATING (FOR 3RD COAST SHIFT)					
8510-	HJ60..ATM			90282-03006-	1	567	
	35477A	VALVE, OVERDRIVE CLUTCH EXHAUST					
8510-	HJ60..ATM			35477-30030-	1	567	
	35477B	SPRING, COMPRESSION (FOR OVERDRIVE CLUTCH EXHAUST VALVE)					
8510-	HJ60..ATM			90501-07042-	1	567	
	35477E	KEY, STRAIGHT (FOR OVERDRIVE CLUTCH EXHAUST VALVE)					
8510-	HJ60..ATM			90282-03006-	1	567	
	35477F	PLUG (FOR OVERDRIVE CLUTCH EXHAUST VALVE)					
C 8510-8511	HJ60..ATM			90339-04017-	1	567	
C 8511-	HJ60..ATM			90339-04021-	1		
	35479B	VALVE, SECONDARY THROTTLE					
8510-	HJ60..ATM			35479-36010-	1	567	
	35479C	SPRING, COMPRESSION (FOR SECONDARY THROTTLE VALVE)					
8510-	HJ60..ATM			90501-07049-	1	567	
	35479D	RING, E (FOR SECONDARY THROTTLE VALVE)					
8510-	HJ60..ATM			90523-06005-	8	567	
	35488	VALVE, 2-3 SHIFT TIMING					
8510-	HJ60..ATM			35488-36010-	1	567	

GENUINE TOYOTA PARTS

PROD.DATE	MODELS	DESCRIPTION	R/P	PART NUMBER	QTY	REV.REF.CODE FROM	REV.REF.CODE UP TO
	35488A	SPRING, COMPRESSION (FOR 2-3 SHIFT TIMING VALVE)					
8510-	HJ60..ATM			90501-09066-	1	567	
	35489	VALVE, 3-2 KICK DOWN ORIFICE CONTROL					
8510-	HJ60..ATM			35489-36010-	1	567	
	35489A	SPRING (FOR 3-2 KICK DOWN ORIFICE CONTROL VALVE)					
8510-	HJ60..ATM			90501-08075-	1	567	
	35489D	KEY, STRAIGHT (FOR 3-2 KICK DOWN ORIFICE CONTROL VALVE)					
8510-	HJ60..ATM			90282-03007-	1	567	
	35489E	PLUG (FOR 3-2 KICK DOWN ORIFICE CONTROL VALVE)					
8510-	HJ60..ATM			90339-04017-	1	567	
	35491A	VALVE, ACCUMULATOR CONTROL					
8510-	HJ60..ATM			35491-36010-	1	567	
	35491B	SPRING, COMPRESSION (FOR ACCUMULATOR CONTROL VALVE)					
8510-	HJ60..ATM			90501-12083-	1	567	
	35491C	KEY, STRAIGHT (FOR ACCUMULATOR CONTROL VALVE)					
8510-	HJ60..ATM			90282-03007-	1	567	
	35491D	PLUG (FOR ACCUMULATOR CONTROL VALVE)					
8510-	HJ60..ATM			90339-04016-	1	567	
	35492A	VALVE, MANUAL DOWN TIMING					
8510-	HJ60..ATM			35492-36010-	1	567	
	35492B	PLUG (FOR MANUAL DOWN TIMING VALVE)					
8510-	HJ60..ATM			90339-06008-	1	567	
	35492D	KEY, STRAIGHT (FOR MANUAL DOWN TIMING VALVE)					
8510-	HJ60..ATM			90282-03006-	1	567	
	35497	VALVE, 3-4 SHIFT					
8510-	HJ60..ATM			35497-36010-	1	567	

PROD.DATE	MODELS	DESCRIPTION	R/P	PART NUMBER	QTY	REV.REF.CODE FROM	REV.REF.CODE UP TO
	35497A	SPRING, COMPRESSION (FOR 3-4 SHIFT VALVE)					
8510-	HJ60..ATM			90501-10095-	1	567	
	35497C	PLUG (FOR 3-4 SHIFT VALVE)					
8510-	HJ60..ATM			90339-05009-	1	567	
	35498	VALVE, 3-4 COAST SHIFT					
8510-	HJ60..ATM			35498-36010-	1	567	
	35560	CAM ASSY, THROTTLE VALVE					
8510-	HJ60..ATM			35560-36011-	1	567	
	35560A	SHIM (FOR THROTTLE VALVE CAM)					
8510-	HJ60..ATM			90564-06002-	33	567	
	35589	SPACER, MANUAL DITENT SPRING					
8510-	HJ60..ATM			35589-36010-	1	567	
	35599	COVER, MANUAL DETENT SPRING					
8510-	HJ60..ATM			35599-36010-	1	567	
	35847	TUBE, TRANSMISSION LUBE APPLY					
8510-	HJ60..ATM			35847-36010-	1	567	
	35893	GASKET, CENTER SUPPORT APPLY					
8510-	HJ60..ATM			35893-36010-	4	567	

PROD.DATE	MODELS	DESCRIPTION	R/P	PART NUMBER	QTY	REV.REF.CODE FROM	REV.REF.CODE UP TO

FIG.35-13 THROTTLE LINK & VALVE LEVER

(ATM) **2-K5**

(8510-)

ILLUST.NO. 10F2

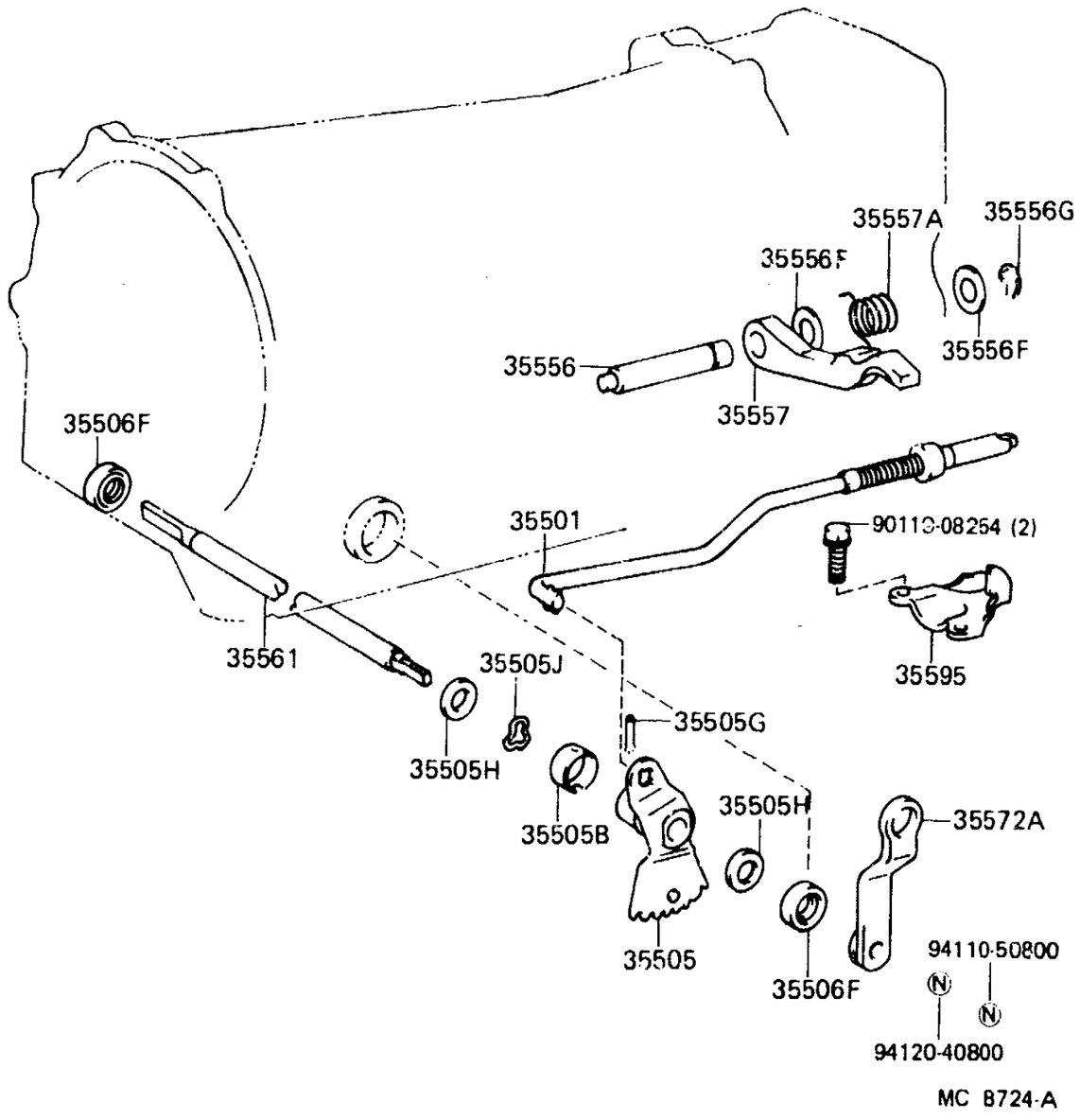

MC B724-A

ILLUST.NO. 20F2

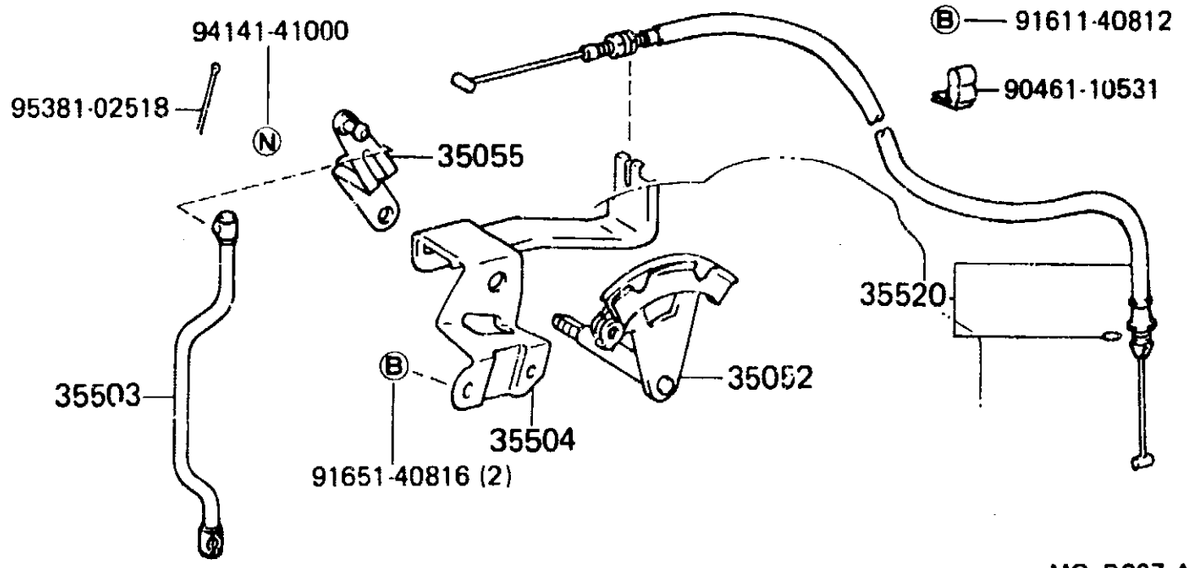

MC B967-A

GENUINE TOYOTA PARTS

PROD.DATE	MODELS	DESCRIPTION	R/P	PART NUMBER	QTY	REV.REF.CODE FROM	REV.REF.CODE UP TO
FIG.	35-13 THROTTLE LINK & VALVE LEVER (ATM)						
	35052	SHAFT SUB-ASSY, THROTTLE CAM					
8510-	HJ60..ATM			35052-60010-	1	567	
	35055	CRANK SUB-ASSY, THROTTLE LINK BELL					
8510-	HJ60..ATM			35055-60010-	1	567	
	35501	ROD SUB-ASSY, PARKING LOCK					
8510-	HJ60..ATM			35501-36010-	1	567	
	35503	ROD SUB-ASSY, THROTTLE LINK CONNECTING, 1ST					
8510-	HJ60..ATM			35503-60010-	1	567	
	35504	BRACKET SUB-ASSY, THROTTLE BELLCRANK, NO.1					
8510-	HJ60..ATM			35504-60010-	1	567	
	35505	LEVER SUB-ASSY, MANUAL VALVE					
8510-	HJ60..ATM			35505-35010-	1	567	
	35505B	SPACER (FOR MANUAL VALVE LEVER)					
8510-	HJ60..ATM			90560-20008-	1	567	
	35505G	PIN, SLOTTED SPRING (FOR MANUAL VALVE LEVER)					
8510-	HJ60..ATM			90254-04012-	1	567	
	35505H	WASHER, PLATE (FOR MANUAL VALVE LEVER)					
8510-	HJ60..ATM			90201-12042-	2	567	
	35505J	WASHER, WAVE (FOR MANUAL VALVE LEVER)					
8510-	HJ60..ATM			90206-12001-	1	567	
	35506F	SEAL, OIL (FOR MANUAL VALVE LEVER SHAFT)					
8510-	HJ60..ATM			90311-12002-	2	567	
	35520	CABLE ASSY, THROTTLE					
8510-	HJ60..ATM			35520-60020-	1	567	

PROD.DATE	MODELS	DESCRIPTION	R/P	PART NUMBER	QTY	REV.REF.CODE FROM	REV.REF.CODE UP TO
	35556	SHAFT, PARKING LOCK PAWL					
8510-	HJ60..ATM			35556-60010-	1	567	
	35556F	WASHER, PLATE (FOR PARKING LOCK PAWL SHAFT)					
8510-	HJ60..ATM			90201-16012-	2	567	
	35556G	RING, SNAP (FOR PARKING LOCK PAWL SHAFT)					
8510-	HJ60..ATM			96150-01600-	1	567	
	35557	PAWL, PARKING LOCK					
8510-	HJ60..ATM			35557-36010-	1	567	
	35557A	SPRING, TORSION (FOR PARKING LOCK PAWL)					
8510-	HJ60..ATM			90508-30004-	1	567	
	35561	SHAFT, MANUAL VALVE LEVER					
8510-	HJ60..ATM			35561-60010-	1	567	
	35572A	LEVER, TRANSMISSION CONTROL SHAFT					
8510-	HJ60..ATM			35572-60030-	1	567	
	35595	BRACKET, PARKING LOCK PAWL					
8510-	HJ60..ATM			35595-36010-	1	567	

FIG.35-14 OIL COOLER & TUBE (ATM)

2-M5

MR4-13-023I

(8510-)

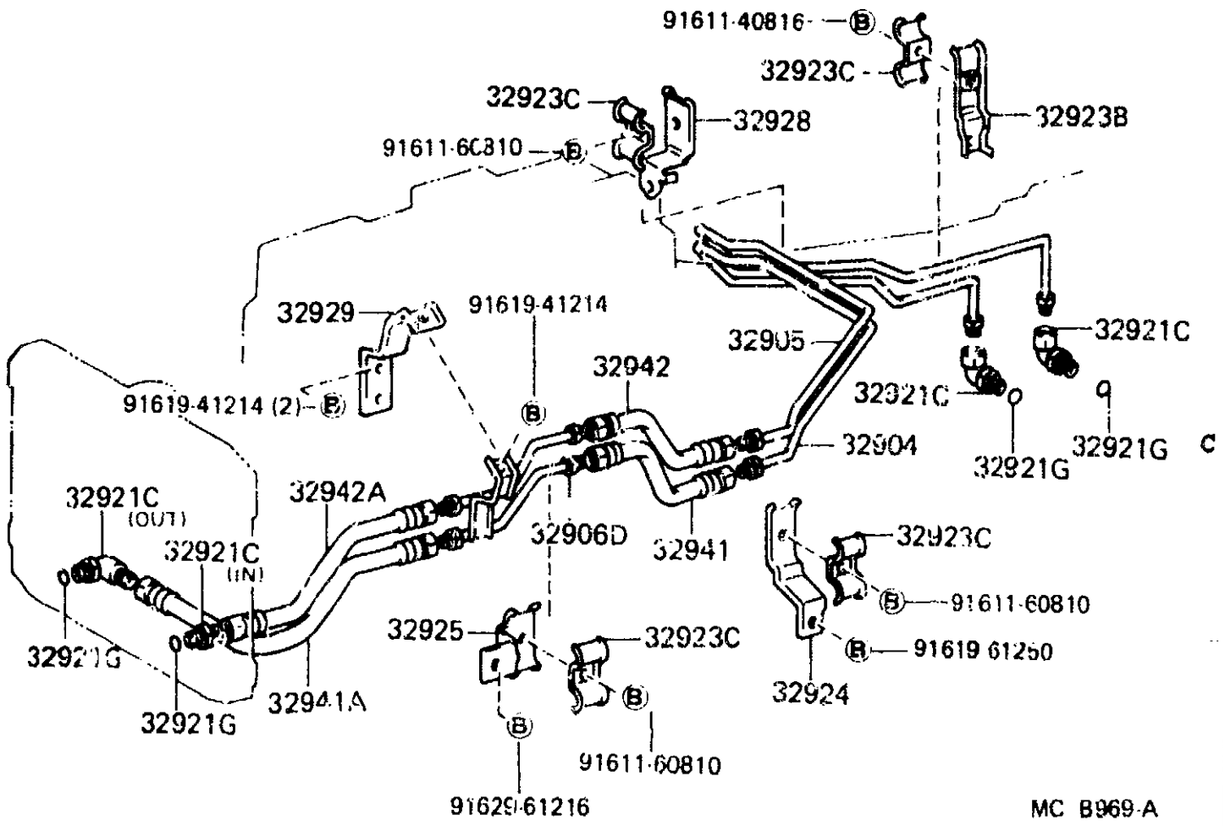

GENUINE TOYOTA PARTS

PROD.DATE	MODELS	DESCRIPTION	R/P	PART NUMBER	QTY	REV.REF.CODE FROM	REV.REF.CODE UP TO
FIG.	35-14 OIL COOLER & TUBE (ATM)						
	32904 TUBE SUB-ASSY, OIL COOLER INLET, NO.1						
8510-	HJ60••ATM			32904-60020-	1	567	
	32905 TUBE SUB-ASSY, OIL COOLER OUTLET, NO.1						
8510-	HJ60••ATM			32905-60020-	1	567	
	32906D TUBE SUB-ASSY, OIL COOLER, NO.2						
8510-	HJ60••ATM			32907-60021-	1	567	
	32921C UNION (FOR OIL COOLER TUBE)						
8510-	HJ60••ATM	RADIATOR SIDE,INLET		90404-16022-	1	567	
8510-	HJ60••ATM	RADIATOR SIDE,OUTLET		90407-14005-	1	567	
8510-	HJ60••ATM	TRANSMISSION SIDE		90407-16006-	2	567	
	32921G RING, O (FOR OIL COOLER TUBE UNION)						
8510-	HJ60••ATM			90301-11006-	4	567	
	32923B CLAMP, OIL COOLER TUBE, NO.1						
8510-	HJ60••ATM			32923-36010-	1	567	
	32923C CLAMP, OIL COOLER TUBE, NO.4						
8510-	HJ60••ATM			90462-12038-	4	567	
	32924 CLAMP, OIL COOLER TUBE, NO.2						
8510-	HJ60••ATM			32924-60020-	1	567	
	32925 CLAMP, OIL COOLER TUBE, NO.3						
8510-	HJ60••ATM			32925-60020-	1	567	
	32928 CLAMP, FLEXIBLE HOSE, NO.1						
8510-	HJ60••ATM			32928-60020-	1	567	
	32929 CLAMP, FLEXIBLE HOSE, NO.2						
8510-	HJ60••ATM			32929-60020-	1	567	

FIG.35-14 **GENUINE TOYOTA PARTS** **2-A6** **GENUINE TOYOTA PARTS**

PROD.DATE	MODELS	DESCRIPTION	R/P	PART NUMBER	QTY	REV.REF.CODE FROM	REV.REF.CODE UP TO
	32941	HOSE, OIL COOLER INLET, NO.1					
8510-	HJ60..ATM			32943-60010-	1	567	
	32941A	HOSE, OIL COOLER INLET, NO.2					
8510-	HJ60..ATM			32941-60020-	1	567	
	32942	HOSE, OIL COOLER OUTLET, NO.1					
8510-	HJ60..ATM			32943-60010-	1	567	
	32942A	HOSE, OIL COOLER OUTLET, NO.2					
8510-	HJ60..ATM			32942-60020-	1	567	

PROD.DATE	MODELS	DESCRIPTION	R/P	PART NUMBER	QTY	REV.REF.CODE FROM	REV.REF.CODE UP TO

(8510-)

ILLUST.NO. 1OF2

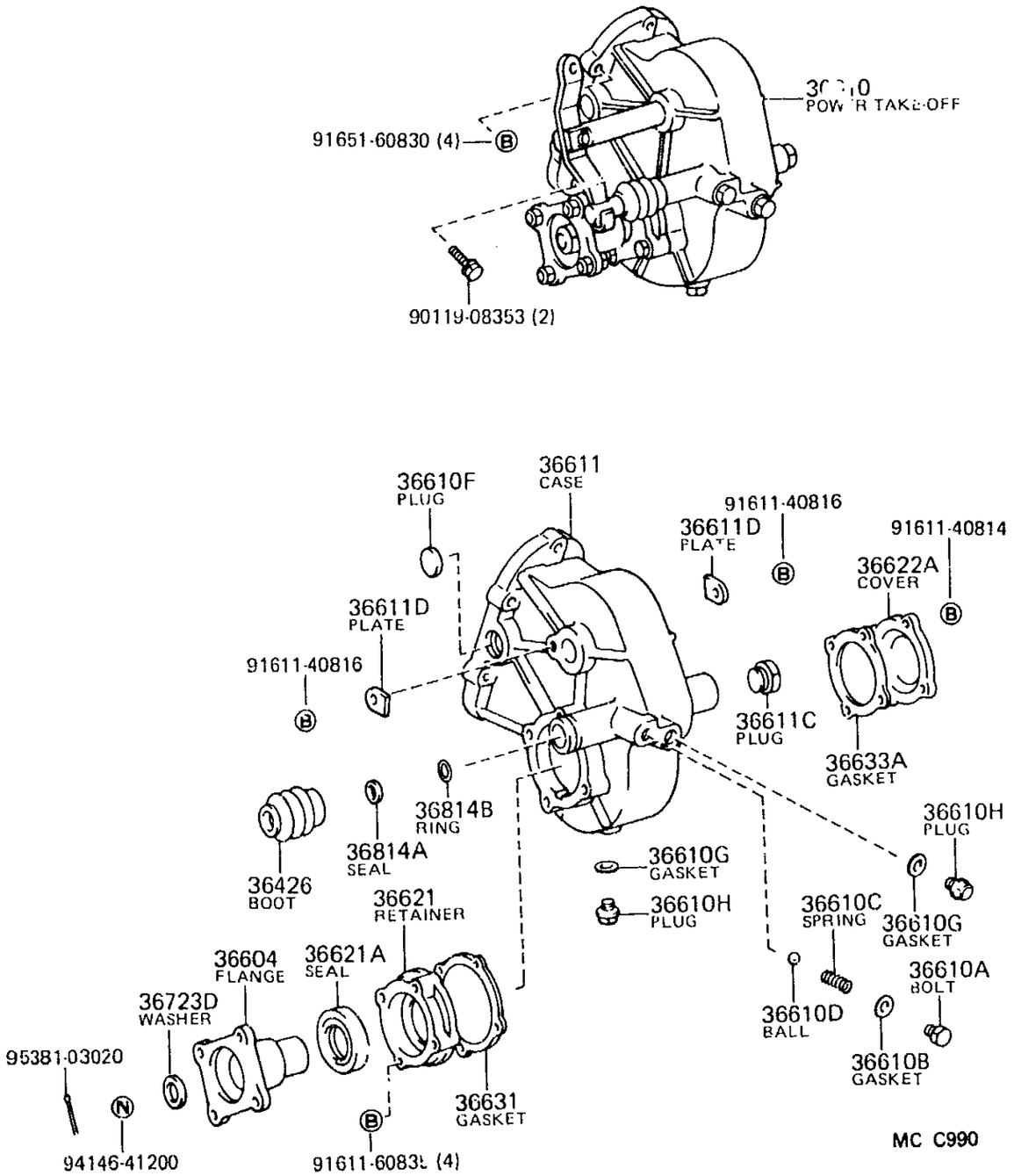

(8510-)

ILLUST.NO. 2OF2

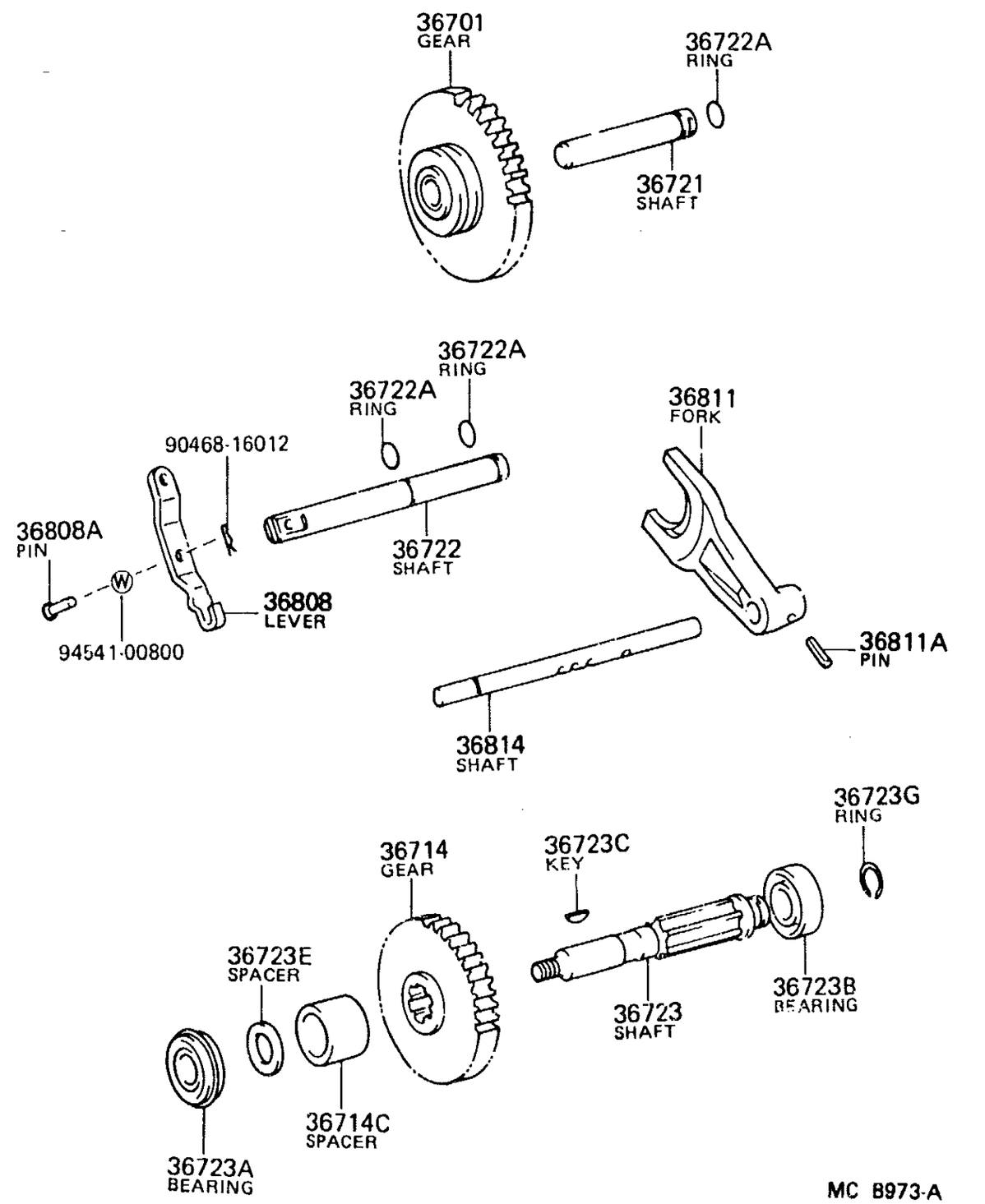

PROD.DATE	MODELS	DESCRIPTION	R/P	PART NUMBER	QTY	REV.REF.CODE FROM	REV.REF.CODE UP TO
FIG. 36-02 POWER TAKE-OFF CASE & GEAR							
	36426 BOOT, DIAPHRAGM PUSH ROD						
8510-	HJ60..ATM			36426-60010-	1	567	
	36604 FLANGE, UNIVERSAL JOINT (FOR FRONT POWER TAKE-OFF)						
8510-	HJ60..ATM	FR DRIVE		33324-60020-	1	567	
	36610 POWER TAKE-OFF ASSY						
8510-	HJ60..ATM			36610-60080-	1	567	
	36610A BOLT, LOCK BALL (FOR POWER TAKE-OFF)						
8510-	HJ60..ATM			90341-12069-	1	567	
	36610B GASKET, SEAT (FOR POWER TAKE-OFF)						
8510-	HJ60..ATM			90430-12030-	1	567	
	36610C SPRING, GEAR SHIFT FORK LOCK BALL (FOR POWER TAKE-OFF)						
8510-	HJ60..ATM			90501-12033-	1	567	
	36610D BALL, GEAR SHIFT FORK LOCK (FOR POWER TAKE-OFF)						
8510-	HJ60..ATM			90360-10003-	1	567	
	36610F PLUG, EXPANSION (FOR POWER TAKE-OFF)						
8510-	HJ60..ATM			90330-27010-	2	567	
	36610G GASKET (FOR FRONT POWER TAKE-OFF DRAIN)						
8510-	HJ60..ATM			90430-18008-	1	567	
	36610H PLUG (FOR FRONT POWER TAKE-OFF DRAIN)						
8510-	HJ60..ATM			90341-18006-	2	567	
	36611 CASE, POWER TAKE-OFF						
8510-	HJ60..ATM			36611-60040-	1	567	
	36611C PLUG, W/HEAD STRAIGHT SCREW (FOR POWER TAKE-OF F CACE)						
8510-	HJ60..ATM			90341-20005-	1	567	

PROD.DATE	MODELS	DESCRIPTION	R/P	PART NUMBER	QTY	REV.REF.CODE FROM	REV.REF.CODE UP TO
	36611D PLATE, LOCK (FOR POWER TAKE-OFF CASE)						
8510-	HJ60..ATM			36726-60010-	2	567	
	36621 RETAINER, POWER TAKE-OFF BEARING						
8510-	HJ60..ATM			36621-60010-	1	567	
	36621A SEAL, OIL (FOR POWER TAKE-OFF BEARING RETAINER)						
8510-	HJ60..ATM			90311-35004-	1	567	
	36622A COVER, POWER TAKE-OFF						
8510-	HJ60..ATM			36622-60010-	1	567	
	36631 GASKET, POWER TAKE-OFF BEARING RETAINER						
8510-	HJ60..ATM			36631-60010-	1	567	
	36633A GASKET, POWER TAKE-OFF COVER						
8510-	HJ60..ATM			36633-60010-	1	567	
	36701 GEAR SUB-ASSY, POWER TAKE-OFF INPUT						
8510-	HJ60..ATM			36701-60030-	1	567	
	36714 GEAR, POWER TAKE-OFF OUTPUT						
8510-	HJ60..ATM			36714-60020-	1	567	
	36714C SPACER (FOR POWER TAKE-OFF OUTPUT GEAR)						
8510-	HJ60..ATM			90560-33001-	1	567	
	36721 SHAFT, POWER TAKE-OFF INPUT GEAR						
8510-	HJ60..ATM			36721-60020-	1	567	
	36722 SHAFT, POWER TAKE-OFF IDLER GEAR						
8510-	HJ60..ATM			36722-60020-	1	567	
	36722A RING, O (FOR POWER TAKE-OFF REVERSE IDLER SHAFT)						
8510-	HJ60..ATM			90301-14030-	3	567	
	36723 SHAFT, POWER TAKE-OFF OUTPUT						
8510-	HJ60..ATM			36723-60050-	1	567	

PROD.DATE	MODELS	DESCRIPTION	R/P	PART NUMBER	QTY	REV.REF.CODE FROM	REV.REF.CODE UP TO
	36723A	BEARING (FOR OUTPUT SHAFT FRONT)					
8510-	HJ60••ATM			97153-06205-	1	567	
	36723B	BEARING (FOR OUTPUT SHAFT REAR)					
8510-	HJ60••ATM			97100-06205-	1	567	
	36723C	KEY, WOODRUFF (FOR POWER TAKE-OFF OUTPUT SHAFT)					
8510-	HJ60••ATM			90280-05001-	1	567	
	36723D	WASHER, PLATE (FOR FRONT POWER TAKE-OFF SHAFT)					
8510-	HJ60••ATM			90201-12169-	1	567	
	36723E	SPACER (FOR POWER TAKE-OFF OUTPUT SHAFT BEARING)					
8510-	HJ60••ATM			90560-25004-	1	567	
	36723G	RING, SHAFT SNAP (FOR OUTPUT SHAFT REAR BEARING)					
8510-	HJ60••ATM			90520-23223-	1	567	
	36808	LEVER SUB-ASSY, POWER TAKE-OFF SHIFT LINK					
8510-	HJ60••ATM			36824-60030-	1	567	
	36808A	PIN, W/HOLE (FOR POWER TAKE-OFF SHIFT LINK LEVER)					
8510-	HJ60••ATM			90240-08128-	1	567	
	36811	FORK, POWR TAKE-OFF SHIFT, NO.1					
8510-	HJ60••ATM			36811-60030-	1	567	
	36811A	PIN, SLOTTED SPRING (FOR POWER TAKE-OFF SHIFT FORK)					
8510-	HJ60••ATM			90254-05001-	1	567	
	36814	SHAFT, POWR TAKE-OFF FORK, NO.1					
8510-	HJ60••ATM			36814-60031-	1	567	
	36814A	SEAL, DUST (FOR FRONT POWER TAKE-OFF SHAFT)					
8510-	HJ60••ATM			90303-13018-	1	567	
	36814B	RING, O (FOR FRONT POWER TAKE-OFF SHAFT)					
8510-	HJ60••ATM			96711-24012-	1	567	

PROD.DATE	MODELS	DESCRIPTION	R/P	PART NUMBER	QTY	REV.REF.CODE FROM	REV.REF.CODE UP TO

GENUINE TOYOTA PARTS

FIG.36-08 TRANSFER ASSEMBLY & GASKET KIT

(8008-)

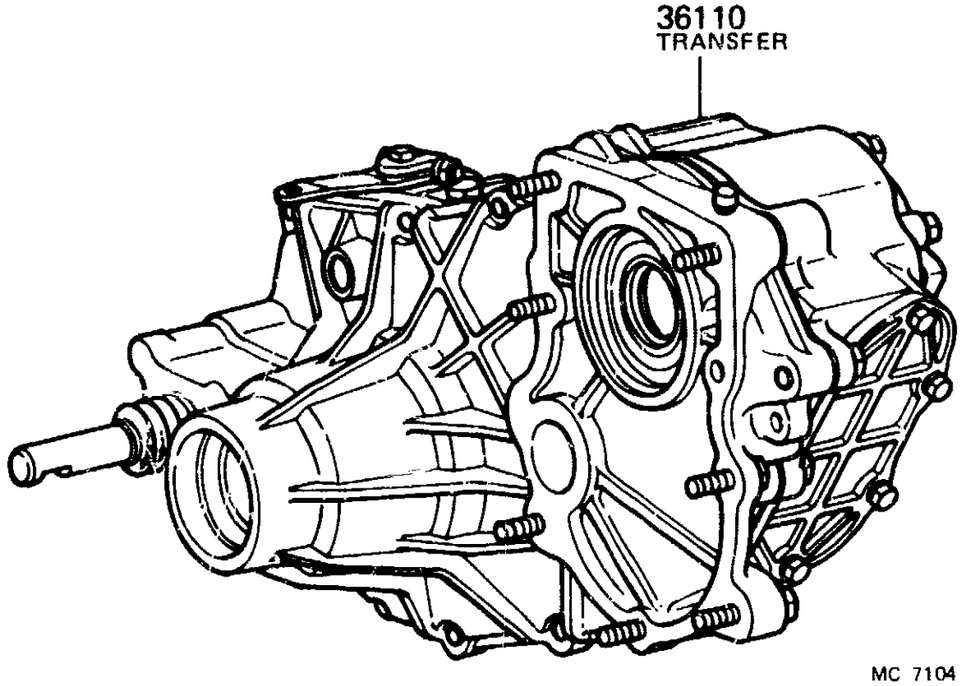

MC 7104

	PROD.DATE	MODELS	DESCRIPTION	R/P	PART NUMBER	QTY	REV.REF.CODE FROM	REV.REF.CODE UP TO
	FIG.	36-08 TRANSFER ASSEMBLY & GASKET KIT						
		36110 TRANSFER ASSY						
	8210-8302	BJ60			36110-60270-	1	467	488
	8302-8411	BJ60			36110-60271-	1	489	514
	8411-8510	BJ60	DIRECT TYPE,SMG DRIVE,N=6		36100-6A100-	1	515	566
	8411-8510	BJ60	MAGNET TYPE,SMG DRIVE,N=6		36110-60630-	1	515	566
	8008-8201	BJ60,FJ60			36100-60952-	1	455	
	8201-8210	BJ60,FJ60			36110-60160-	1		466
	8210-8302	FJ60			36110-60161-	1	467	488
	8302-8504	FJ60			36110-60162-	1	489	554
C	8504-8604	FJ60			36100-6A160-	1	555	572
C	8604-	FJ60			36100-6A270-	1	573	
	8510-	HJ60..ATM	MAGNET TYPE,W/POWER TAKE-OFF		36100-6A720--	1	567	
	8510-	HJ60..ATM	MAGNET TYPE		36110-6A740-	1	567	
	8510-	HJ60..MTM	MAGNET TYPE,SMG DRIVE,N=6		36100-6A510-	1	567	
	8510-	HJ60..MTM	DIRECT TYPE,SMG DRIVE,N=6		36100-6A750-	1	567	

FIG.36-09 TRANSFER CASE & EXTENSION HOUSING 2-F6

(8008-8411)BJ60; (8008-8504)FJ60

(8411-)BJ60; (8504-)HJ60,FJ60

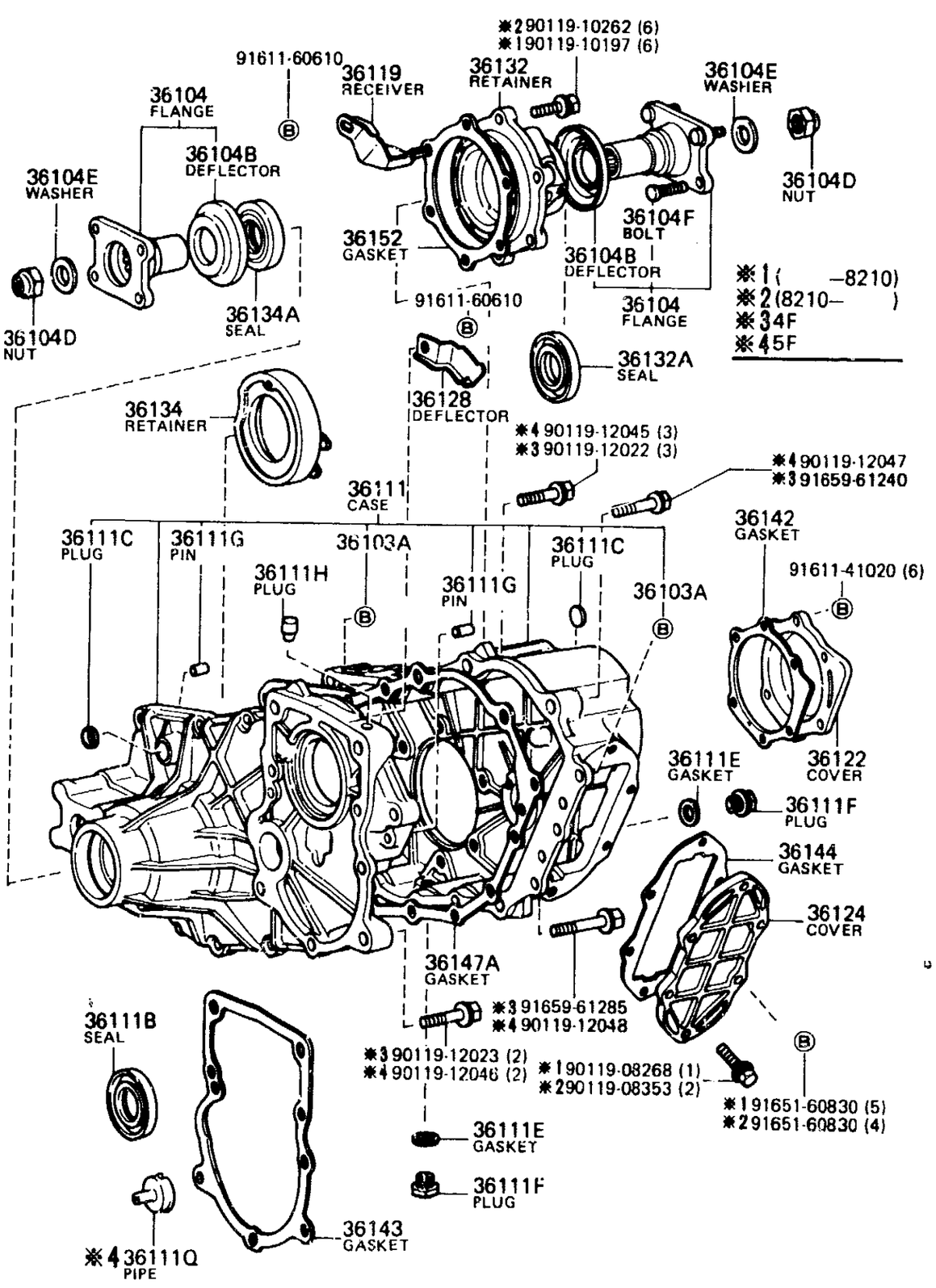

MC 7106-E

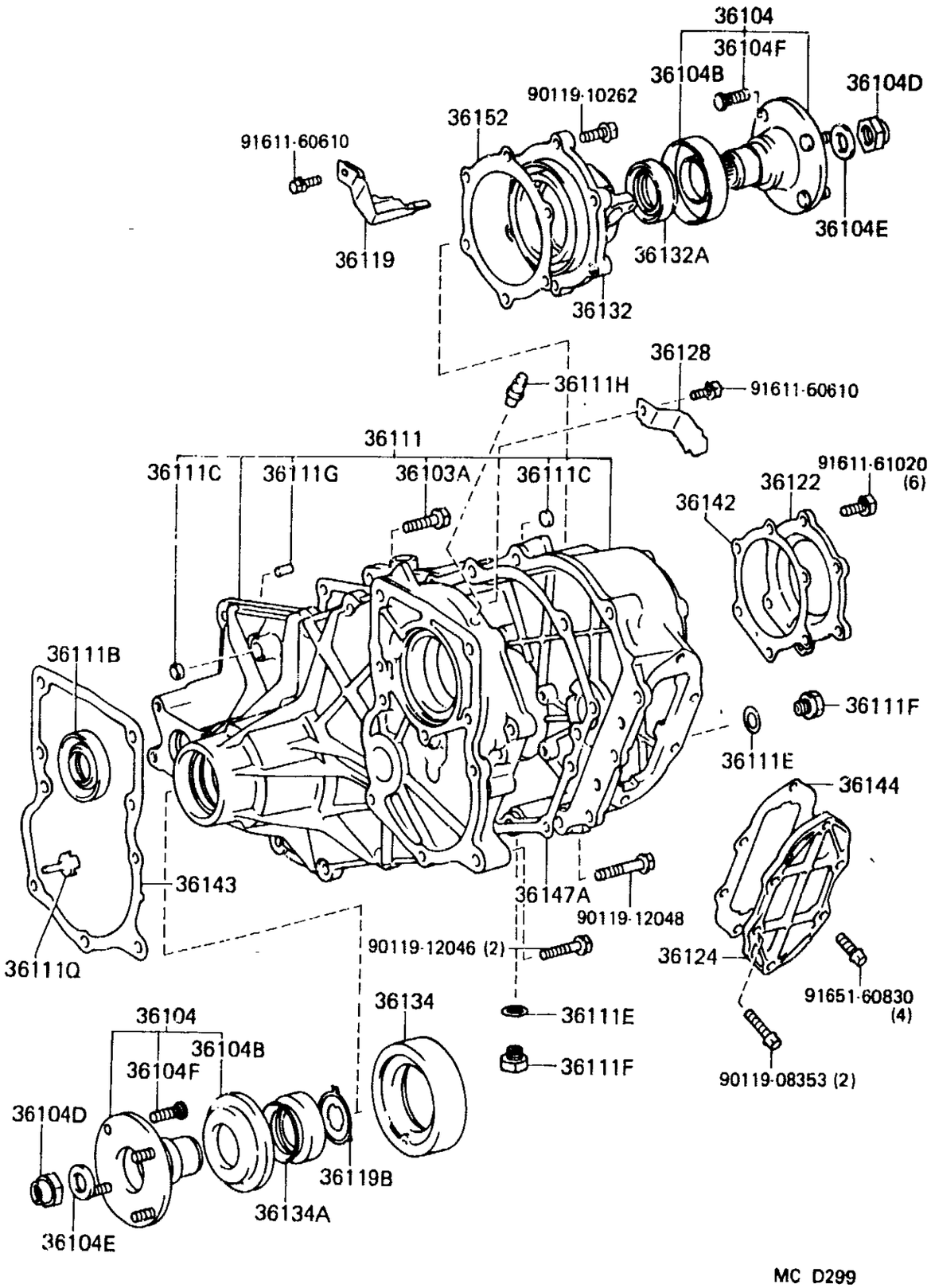

MC D299

	PROD.DATE	MODELS	DESCRIPTION	R/P	PART NUMBER	QTY	REV.REF.CODE FROM	REV.REF.CODE UP TO
	FIG.	36-09 TRANSFER CASE & EXTENSION HOUSING						
		36103A BOLT (FOR TRANSFER CASE)						
C	8008-	BJ60,HJ60,FJ60	*10-1.25PX 30-30		91651-61030-	3	455	
C	8008-	BJ60,HJ60,FJ60	*10-1.25PX 40-30		91651-61040-	8	455	
		36104 FLANGE, COMPANION (FOR TRANSFER OUTPUT SHAFT)						
	8411-8504	BJ60	FR DRIVE		33309-60070-	1	515	554
	8008-8408	BJ60,FJ60	RR DRIVE		33309-60020-	1	455	
	8008-8411	BJ60,FJ60	FR DRIVE		33309-60010-	1	455	514
	8408-	BJ60,HJ60,FJ60	RR DRIVE		33309-60040-	1		
	8504-	BJ60,HJ60,FJ60	FR DRIVE		33309-60070-	1	555	
	8411-8504	FJ60	FR DRIVE		33309-60010-	1	515	554
		36104B DEFLECTOR, DUST (FOR TRANSFER OUTPUT SHAFT)						
	8008-	BJ60,HJ60,FJ60	FR DRIVE		33325-60010-	1	455	
	8008-	BJ60,HJ60,FJ60	RR DRIVE		33325-60020-	1	455	
		36104D NUT (FOR TRANSFER OUTPUT SHAFT)						
	8008-	BJ60,HJ60,FJ60			90179-22005-	2	455	
		36104E WASHER, PLATE (FOR TRANSFER OUTPUT SHAFT)						
	8008-	BJ60,HJ60,FJ60			90201-22005-	2	455	
		36104F BOLT (FOR TRANSFER OUTPUT SHAFT COMPANION FLANGE)						
	8008-	BJ60,HJ60,FJ60			90114-11124-	8	455	
		36111 CASE, TRANSFER						
	8411-8510	BJ60	DIRECT TYPE		36103-60070-	1	515	566
	8411-8510	BJ60	MAGNET TYPE		36103-60080-	1	515	566
	8008-8210	BJ60,FJ60		#	36103-60010- (36103-60030-)	1	455	466
	8210-8411	BJ60,FJ60			36103-60011-	1	467	514
	8411-8504	FJ60				1	515	554
C	8504-8604	FJ60			36103-60050-	1	555	572

	PROD.DATE	MODELS	DESCRIPTION	R/P	PART NUMBER	QTY	REV.REF.CODE FROM	REV.REF.CODE UP TO
		36111 CASE, TRANSFER CONTINUED						
C	8604-	FJ60			36103-60120-	1	573	
	8510-	HJ60..ATM			36103-60160-	1	567	
	8510-	HJ60..MTM	DIRECT TYPE		36103-60140-	1	567	
	8510-	HJ60..MTM	MAGNET TYPE		36103-60150-	1	567	
		36111B SEAL, OIL (FOR TRANSFER CASE)						
	8008-8210	BJ60,FJ60			90311-48002-	1	455	466
	8210-8411	BJ60,FJ60			90311-48007-	1	467	514
C	8411-8608	BJ60,HJ60..MTM			90311-48008-	1	515	600
	8411-8504	FJ60			90311-48007-	1	515	554
C	8504-8608	FJ60			90311-48008	1	555	600
	8510-	HJ60..ATM			90316-48002-	1	567	
C	8608-	HJ60,FJ60..MTM			90311-48012-	1	601	
		36111C PLUG (FOR TRANSFER CASE)						
	8008-	BJ60,HJ60,FJ60			90331-16050-	2	455	
		36111E GASKET (FOR TRANSFER CASE)						
	8008-8109	BJ60,FJ60			12157-10010-	2	455	
	8109-8408	BJ60,FJ60			90430-18007-	2		
	8408-	BJ60,HJ60,FJ60			90430-18008-	2		
		36111F PLUG (FOR TRANSFER CASE)						
	8008-8304	BJ60,FJ60	FILLER PLUG		90341-18002-	1	455	
	8008-	BJ60,HJ60,FJ60	DRAIN PLUG		90341-18057-	1	455	
	8304-	BJ60,HJ60,FJ60	FILLER PLUG		90341-18006-	1		
		36111G PIN, STRAIGHT (FOR TRANSFER CASE)						
	8008-	BJ60,HJ60,FJ60			90250-10006-	2	455	
		36111H PLUG, BREATHER (FOR TRANSFER CASE)						
	8008-	BJ60,HJ60,FJ60			90930-03075-	1	455	

* O—O PX O—O =
Outside diameter—Pitch x Bolt length—Thread length

GENUINE TOYOTA PARTS

PROD.DATE	MODELS	DESCRIPTION	R/P	PART NUMBER	QTY	REV.REF.CODE FROM	REV.REF.CODE UP TO
	36111Q PIPE, OIL RECEIVER						
8210-	BJ60,HJ60..MTM			33124-36010-	1	467	
	36119 RECEIVER, TRANSFER OIL, NO.1						
8008-	BJ60,HJ60,FJ60			36119-60010-	1	455	
	36119B RECEIVER, TRANSFER OIL, NO.2						
8411-	BJ60,HJ60,FJ60			36119-60030-	1	515	
	36122 COVER, TRANSFER CASE, NO.2						
8008-	BJ60,HJ60,FJ60			36122-60040-	1	455	
	36124 COVER, TRANSFER POWER TAKE-OFF						
8008-	BJ60,HJ60,FJ60			36124-60020-	1	455	
	36128 DEFLECTOR, BREATHER OIL						
8008-8210	BJ60,FJ60			# 36128-60020- (36128-60021-)	1	455	466
8210-	BJ60,HJ60,FJ60			36128-60021-	1	467	
	36132 RETAINER, OUTPUT SHAFT BEARING, REAR NO.1						
8008-	BJ60,HJ60,FJ60			36132-60020-	1	455	
	36132A SEAL, OIL (FOR OUTPUT SHAFT RETAINER)						
8008-8411	BJ60,FJ60			90311-48003-	1	455	514
8411-	BJ60,HJ60			90311-48010-	1	515	
8411-8504	FJ60			90311-48003-	1	515	554
8504-	FJ60			90311-48010-	1	555	
	36134 RETAINER, OUTPUT SHAFT BEARING, FRONT						
8008-	BJ60,HJ60,FJ60			36134-60020-	1	455	
	36134A SEAL, OIL (FOR OUTPUT SHAFT BEARING FRONT RETAINER)						
8008-8411	BJ60,FJ60			90311-48002-	1	455	514
8411-	BJ60,HJ60			90311-48009-	1	515	
8411-8504	FJ60			90311-48002-	1	515	554
8504-	FJ60			90311-48009-	1	555	

PROD.DATE	MODELS	DESCRIPTION	R/P	PART NUMBER	QTY	REV.REF.CODE FROM	REV.REF.CODE UP TO
	36142 GASKET, TRANSFER COVER						
8008-	BJ60,HJ60,FJ60			36142-60030-	1	455	
	36143 GASKET, TRANSFER CASE, FRONT						
8008-8504	BJ60,FJ60..4F			33142-60020-	1	455	554
8210-	BJ60,HJ60..5F			33142-60030-	1	467	
8504-	FJ60			33142-60040-	1	555	
8510-	HJ60..ATM			36143-60030-	1	567	
	36144 GASKET, TRANSFER POWER TAKE-OFF COVER						
8008-	BJ60,HJ60,FJ60			36144-60020-	1	455	
	36147A GASKET, TRANSFER CASE						
8008-	BJ60,HJ60,FJ60			36143-60020-	1	455	
	36152 GASKET, OUTPUT SHAFT BEARING RETAINER						
8008-	BJ60,HJ60,FJ60			36152-60030-	1	455	

(8008–)

※1 (–8210)
※2 (8210–)
※3 (8510–) ATM

(–8210)

36213A
36213

36212
※3 36212J
Refer to FIG. 33-05
36251
36215
36212A
Refer to FIG. 33-05
Refer to FIG. 33-05

36225A
36225
36726
Ⓑ 91661-40818

※2 91611-60618 (3) Ⓑ
※2 36119A
36221
36221B
36222
36221B
36261
36222

36231
36203
※1 36203A
36231E
36231C
36237
※3 36203B
36234
36234B
36231F
36236
36234A

※2 33481R
36204
※1 36204A
36231C
36231A
36235
33481P
36231B
※3 36204B

MC 9056-B

FIG.36-10 **GENUINE TOYOTA PARTS**

2-J6

GENUINE TOYOTA PARTS

	PROD.DATE	MODELS	DESCRIPTION	R/P	PART NUMBER	QTY	REV.REF.CODE FROM	REV.REF.CODE UP TO
	FIG.	36-10 TRANSFER GEAR						
		33481P GEAR, SPEEDOMETER DRIVE (FOR TRANSFER)						
	8008-	BJ60,HJ60,FJ60..MTM			33481-60060-	1	455	
	8510-	HJ60..ATM			33481-60050-	1	567	
		33481R WASHER, PLATE (FOR SPEEDOMETER DRIVE GEAR)						
	8210-	BJ60,HJ60,FJ60			90201-35002-	1	467	
		36119A RECEIVER, TRANSFER OIL (FOR TRANSFER IDLER GEAR)						
	8210-	BJ60,HJ60,FJ60			36119-60020-	1	467	
		36203 GEAR SUB-ASSY, TRANSFER HIGH SPEED OUTPUT						
	8008-8210	BJ60,FJ60			# 36203-60020- (36203-60021-)	1	455	466
C	8210-8604	BJ60,FJ60			36203-60021-	1	467	572
C	8604-	FJ60			36203-60050-	1	573	
	8510-	HJ60..ATM			36241-60080-	1	567	
		36203A BUSH, SOLID (FOR TRANSFER HIGH SPEED OUTPUT GEAR)						
	8008-8210	BJ60,FJ60			90999-73089-	1	455	
		36203B BEARING (FOR TRANSFER HIGH SPEED OUTPUT GEAR)						
	8510-	HJ60..ATM			90364-40001-	1	567	
		36204 GEAR SUB-ASSY, TRANSFER LOW SPEED OUTPUT						
	8210-8510	BJ60..5F			36204-60031-	1	467	566
	8008-8210	BJ60,FJ60..4F			# 36204-60040- (36204-60041-)	1	455	466
C	8210-8604	BJ60,FJ60..4F			36204-60041-	1	467	572
C	8604-	FJ60			36204-60070-	1	573	
	8510-	HJ60..ATM			36242-60120-	1	567	
	8510-	HJ60..MTM			36204-60080-	1	567	
		36204A BUSH, SOLID (FOR TRANSFER LOW SPEED OUTPUT GEAR)						
	8008-8210	BJ60,FJ60			90999-73089-	1	455	

	PROD.DATE	MODELS	DESCRIPTION	R/P	PART NUMBER	QTY	REV.REF.CODE FROM	REV.REF.CODE UP TO
		36204B BEARING (FOR TRANSFER LOW SPEED OUTPUT GEAR)						
	8510-	HJ60..ATM			90364-40001-	1	567	
		36212 GEAR, TRANSFER INPUT						
	8008-8210	BJ60,FJ60			36212-60040-	1	455	466
C	8210-8604	BJ60,FJ60			36212-60041-	1	467	572
C	8604-	FJ60			36212-60080-	1	573	
C	8510-	HJ60			36212-60090-	1	567	
		36212A BEARING, RADIAL BALL (FOR TRANSFER INPUT GEAR)						
	8008-	BJ60,HJ60,FJ60			90363-35013-	1	455	
		36212J RING, O (FOR TRANSFER INPUT GEAR)						
	8510-	HJ60..ATM			90301-34005-	1	567	
		36213 STOPPER, TRANSFER INPUT GEAR						
	8008-8210	BJ60,FJ60			36213-60020-	1	455	467
		36213A BALL (FOR TRANSFER INPUT GEAR STOPPER)						
	8008-8210	BJ60,FJ60			90360-06004-	1	455	467
		36215 GEAR, POWER TAKE-OFF DRIVE						
C	8008-	BJ60,HJ60,FJ60			36215-60030-	1	455	
		36221 GEAR, TRANSFER IDLER						
	8210-8510	BJ60..5F			36221-60041-	1	467	566
	8008-8210	BJ60,FJ60..4F			# 36221-60050- (36221-60051-)	1	455	466
C	8210-8604	BJ60,FJ60..4F			36221-60051-	1	467	572
C	8604-	FJ60			36221-60090-	1	573	
	8510-	HJ60			36221-60080-	1	567	
		36221B BEARING (FOR TRANSFER IDLER GEAR)						
C	8008-8604	BJ60,FJ60			90364-34006-	2	455	572
C	8604-	FJ60			90364-38012-	2	573	
	8510-	HJ60				2	567	

GENUINE TOYOTA PARTS

	PROD.DATE	MODELS	DESCRIPTION	R/P	PART NUMBER	QTY	REV.REF.CODE FROM	REV.REF.CODE UP TO
		36222 WASHER, TRANSFER IDLER GEAR SIDE THRUST						
C	8008-8604	BJ60,FJ60			36222-60010-	2	455	572
C	8604-	FJ60			36222-60020-	2	573	
	8510-	HJ60				2	567	
		36225 SHAFT, TRANSFER IDLER GEAR						
C	8008-8604	BJ60,FJ60			36225-60030-	1	455	572
C	8604-	FJ60			36225-60050-	1	573	
		36225A RING, O (FOR TRANSFER IDLER SHAFT)						
C	8008-8604	BJ60,FJ60			90301-27003-	1	455	572
C	8604-	FJ60			90301-34004-	1	573	
	8510-	HJ60				1	567	
		36231 SHAFT, TRANSFER OUTPUT, REAR						
	8008-	BJ60,HJ60,FJ60..MTM			36231-60021-	1	455	
	8510-	HJ60..ATM			36231-60050-	1	567	
		36231A SPACER (FOR TRANSFER OUTPUT SHAFT)						
	8008-8210	BJ60,FJ60			# 90560-35005- (90560-35008-) •(90201-35002-)	1	455	466
	8210-	BJ60,HJ60,FJ60			90560-35008-	1	467	
		36231B SHIM (FOR TRANSFER OUTPUT SHAFT)						
	8008-	BJ60,HJ60,FJ60	T=0.15		90564-70001-	1	455	
	8008-	BJ60,HJ60,FJ60	T=0.4		90564-70002-	1	455	
	8008-	BJ60,HJ60,FJ60	T=0.5		90564-70003-	1	455	
	8008-	BJ60,HJ60,FJ60	T=0.6		90564-70004-	1	455	
	8008-	BJ60,HJ60,FJ60	T=0.7		90564-70005-	1	455	
	8008-	BJ60,HJ60,FJ60	T=0.8		90564-70006-	1	455	
	8008-	BJ60,HJ60,FJ60	T=0.9		90564-70007-	1	455	
	8008-	BJ60,HJ60,FJ60	T=1.0		90564-70008-	1	455	
	8008-	BJ60,HJ60,FJ60	T=1.1		90564-70009-	1	455	
	8008-	BJ60,HJ60,FJ60	T=1.2		90564-70010-	1	455	
	8008-	BJ60,HJ60,FJ60	T=1.3		90564-70011-	1	455	

GENUINE TOYOTA PARTS

	PROD.DATE	MODELS	DESCRIPTION	R/P	PART NUMBER	QTY	REV.REF.CODE FROM	REV.REF.CODE UP TO
		36231B SHIM (FOR TRANSFER OUTPUT SHAFT) CONTINUED						
	8008-	BJ60,HJ60,FJ60	T=1.4		90564-70012-	1	455	
	8008-	BJ60,HJ60,FJ60	T=1.5		90564-70013-	1	455	
		36231C BEARING, TAPER ROLLER (FOR TRANSFER OUTPUT SHAFT)						
C	8008-8604	BJ60,FJ60		RR	97600-30307-	1	455	572
	8008-	BJ60,HJ60,FJ60		FR	90366-35011-	1	455	
C	8604-	FJ60		RR	90366-35053-	1	573	
	8510-	HJ60..ATM		RR	90366-35054-	1	567	
	8510-	HJ60..MTM		RR	90366-35053-	1	567	
		36231E BEARING, NEEDLE ROLLER (FOR TRANSFER OUTPUT SHAFT FRONT)						
	8008-	BJ60,HJ60,FJ60			90364-17010-	1	455	
		36231F RING, SHAFT SNAP (FOR TRANSFER OUTPUT SHAFT)						
	8008-	BJ60,HJ60,FJ60	T=2.3		90520-33107-	1	455	
	8008-	BJ60,HJ60,FJ60	T=2.6		90520-33110-	1	455	
		36234 SHAFT, TRANSFER OUTPUT, FRONT						
	8008-	BJ60,HJ60,FJ60			36234-60031-	1	455	
		36234A BEARING (FOR TRANSFER OUTPUT FRONT SHAFT)						
	8008-	BJ60,HJ60,FJ60			90363-35013-	1	455	
		36234B RING, SNAP (FOR TRANSFER OUTPUT FRONT BEARING)						
	8008-	BJ60,HJ60,FJ60			90521-75023-	1	455	
		36235 SLEEVE, TRANSFER HIGH AND LOW CLUTCH						
	8008-	BJ60,HJ60,FJ60..MTM			36235-60020-	1	455	
	8510-	HJ60..ATM			36235-60030-	1	567	
		36236 SLEEVE, FRONT DRIVE CLUTCH						
	8008-	BJ60,HJ60,FJ60			36235-60020-	1	455	
		36237 HUB, TRANSFER CLUTCH						
	8008-	BJ60,HJ60,FJ60			36237-60020-	1	455	

	PROD.DATE	MODELS	DESCRIPTION	R/P	PART NUMBER	QTY	REV.REF.CODE FROM	REV.REF.CODE UP TO
		36251	SPACER, TRANSFER INPUT SHAFT					
	8210-8510	BJ60..5F			36251-60030-	1	467	566
C	8008-8604	BJ60,FJ60..4F			36251-60050-	1	455	572
C	8604-	FJ60			36251-60030-	1	573	
C	8510-	HJ60				1	567	
		36261	SPACER, TRANSFER IDLER GEAR					
C	8008-8604	BJ60,FJ60			90560-34001-	1	455	572
C	8604-	FJ60			90560-38003-	1	573	
	8510-	HJ60				1	567	
		36726	PLATE, LOCK (FOR TRANSFER GEAR)					
	8008-8108	BJ60,FJ60			36726-60010-	1	455	
	8108-	BJ60,HJ60,FJ60			36726-60020-	1		

PROD.DATE	MODELS	DESCRIPTION	R/P	PART NUMBER	QTY	REV.REF.CODE FROM	REV.REF.CODE UP TO

FIG.36-11 TRANSFER LEVER & SHIFT ROD

2-M16

(8008-)

DIRECT TYPE

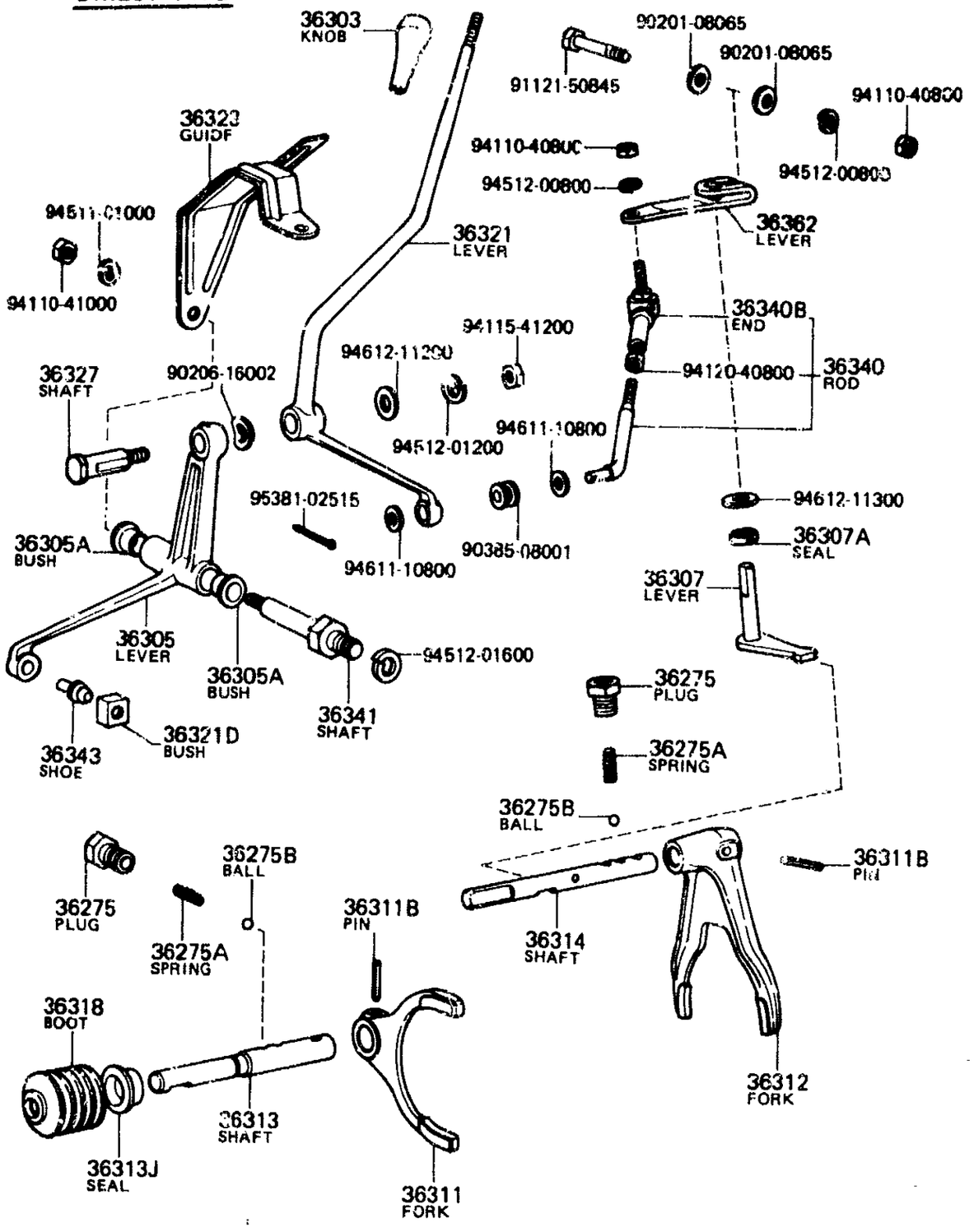

MC 7175-A

ELECTRIC TYPE

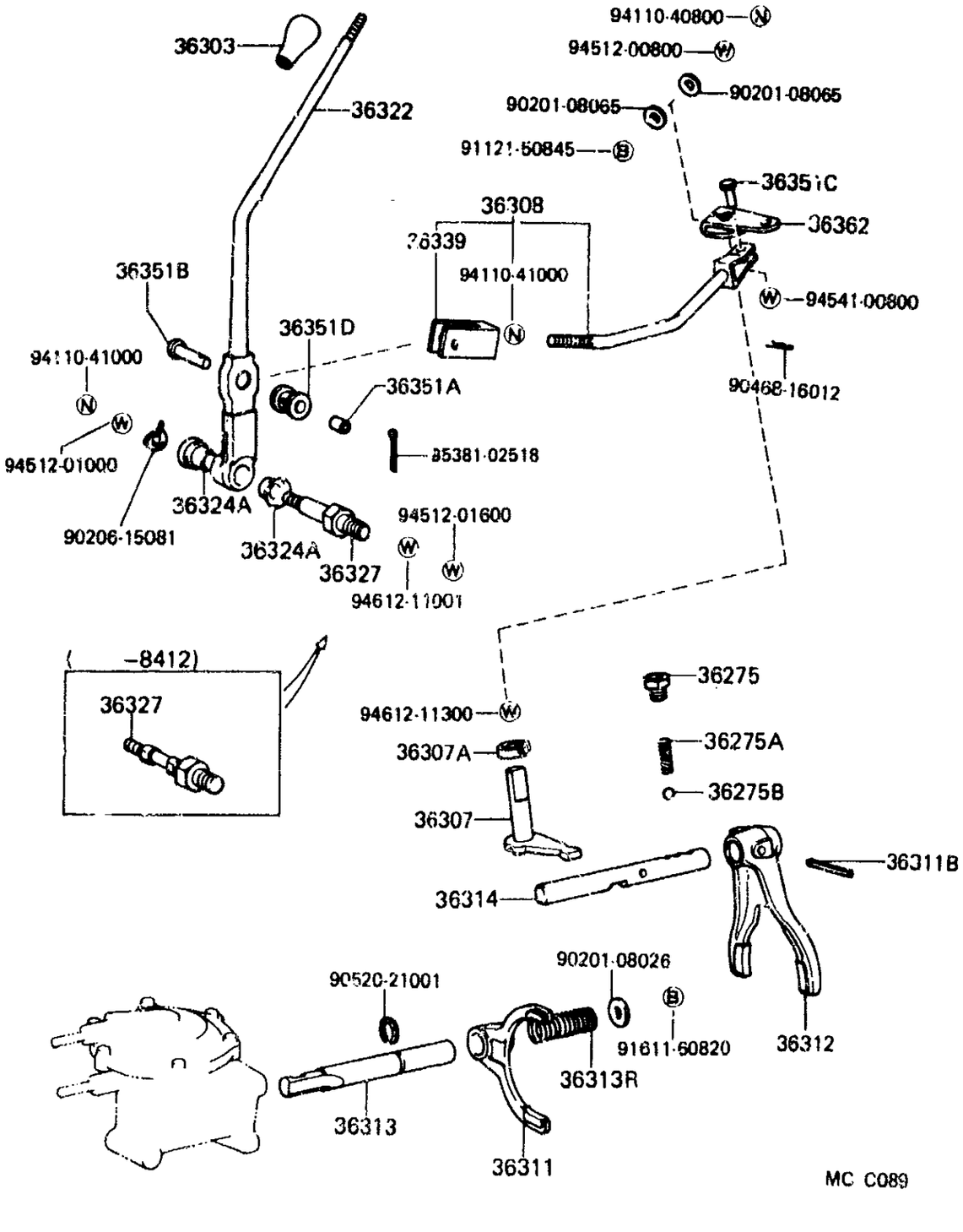

MC C089

PROD.DATE	MODELS	DESCRIPTION	R/P	PART NUMBER	QTY	REV.REF.CODE FROM	REV.REF.CODE UP TO
FIG.	36-11 TRANSFER LEVER & SHIFT ROD						
	36275 PLUG, SHAFT DETENT BALL SPRING						
8008-	BJ60,HJ60,FJ60			90341-15001-	2	455	
	36275A SPRING, COMPRESSION (FOR SHIFT DETENT BALL)						
8008-	BJ60,HJ60,FJ60			90501-14029-	2	455	
	36275B BALL, SHIFT DETENT						
8008-	BJ60,HJ60,FJ60			90360-10003-	2	455	
	36303 KNOB SUB-ASSY, SHIFT LEVER						
8411-8504	BJ60	DIRECT TYPE		36303-60070-	1	515	554
8008-8411	BJ60,FJ60	DIRECT TYPE	#	36303-60080- (36303-60070-)	1	455	514
8411-	BJ60,HJ60	MAGNET TYPE		36303-60130-	1	515	
8504-	BJ60,HJ60,FJ60..MTM	DIRECT TYPE		36303-60070-	1	555	
8411-8504	FJ60	DIRECT TYPE	#	36303-60080- (36303-60070-)	1		554
	36305 LEVER SUB-ASSY, FRONT DRIVE SHIFT LINK						
8210-8504	BJ60..5F			36337-60060-	1	467	554
8008-8504	BJ60,FJ60..4F			36337-60040-	1	455	
8504-	BJ60,HJ60,FJ60..MTM			36337-60060-	1	555	
	36305A BUSH (FOR FRONT DRIVE SHIFT LINK LEVER)						
8008-	BJ60,HJ60,FJ60..MTM			36324-60050-	2	455	
	36307 LEVER SUB-ASSY, HIGH & LOW SHIFT INNER						
8411-	BJ60,HJ60	MAGNET TYPE		36307-60040-	1	515	
8008-	BJ60,HJ60,FJ60..MTM	DIRECT TYPE		36307-60030-	1	455	
	36307A SEAL, OIL (FOR HIGH & LOW SHIFT INNER LEVER)						
8008-	BJ60,HJ60,FJ60			90313-13001-	1	455	

PROD.DATE	MODELS	DESCRIPTION	R/P	PART NUMBER	QTY	REV.REF.CODE FROM	REV.REF.CODE UP TO
	36308 ROD SUB-ASSY, HIGH & LOW SHIFT						
8411-8502	BJ60			# 36308-60050- (36308-60080-) ·(90240-10157-)	1	515	
8502-	BJ60,HJ60..MTM			36308-60080-	1		
8510-	HJ60..ATM			36308-60100-	1	567	
	36311 FORK, TRANSFER GEAR SHIFT, NO.1						
8008-8210	BJ60,FJ60			# 36311-60040- (36311-60041-)	1	455	466
8210-	BJ60,HJ60,FJ60			36311-60041-	1	467	
	36311B PIN, SLOTTED SPRING (FOR SHIFT FORK)						
8008-	BJ60,HJ60,FJ60	L=25.5,DIRECT & MAGNET TYPE		90254-05016-	1	455	
8008-	BJ60,HJ60,FJ60..MTM	L=36,DIRECT TYPE		90254-05004-	1	455	
	36312 FORK, TRANSFER GEAR SHIFT, NO.2						
8411-	BJ60,HJ60	MAGNET TYPE		36312-60040-	1	515	
8008-	BJ60,HJ60,FJ60..MTM	DIRECT TYPE		36312-60030-	1	455	
	36313 SHAFT, TRANSFER FRONT DRIVE SHIFT						
8411-	BJ60,HJ60	MAGNET TYPE		36313-60070-	1	515	
8008-	BJ60,HJ60,FJ60..MTM	DIRECT TYPE		36313-60050-	1	455	
	36313J SEAL, OIL (FOR TRANSFER FRONT DRIVE SHIFT SHAFT)						
8008-	BJ60,HJ60,FJ60..MTM			90311-22005-	1	455	
	36313R SPRING, COMPRESSION (FOR TRANSFER FR DRIVE SHIFT SHAFT)						
8411-	BJ60,HJ60			90501-29003-	1	515	
	36314 SHAFT, TRANSFER HIGH AND LOW SHIFT FORK						
8411-8504	BJ60			36314-60040-	1	515	554
8008-8411	BJ60,FJ60			36314-60030-	1	455	514
8504-	BJ60,HJ60,FJ60			36314-60040-	1	555	

GENUINE TOYOTA PARTS

PROD.DATE	MODELS	DESCRIPTION	R/P	PART NUMBER	QTY	REV.REF.CODE FROM	REV.REF.CODE UP TO
	36314 SHAFT, TRANSFER HIGH AND LOW SHIFT FORK						
	CONTINUED						
8411-8504	FJ60			36314-60030-	1	515	554
	36318 BOOT, TRANSFER FRONT DRIVE SHIFT						
8008-	BJ60,HJ60,FJ60..MTM			36318-60020-	1	455	
	36321 LEVER, TRANSFER FRONT DRIVE SHIFT						
8210-8411	BJ60..5F			36321-60080-	1	467	514
8411-8504	BJ60..5F			36321-60130-	1	515	554
8008-8504	BJ60,FJ60..4F			36321-60061-	1	455	554
C 8504-8608	BJ60,HJ60,FJ60..MTM			36321-60130-	1	555	600
8608-	HJ60,FJ60..MTM			36302-60100-	1	601	
	36321D BUSH (FOR TRANSFER SHIFT LEVER)						
8008-	BJ60,HJ60,FJ60..MTM			33548-60010-	1	455	
	36322 LEVER, TRANSFER HIGH & LOW SHIFT						
8411-8412	BJ60			36322-60110-	1	515	
8412-8510	BJ60			36322-60111-	1		566
8510-	HJ60			36360-60220-	1	567	
	36323 GUIDE, TRANSFER SHIFT LEVER						
8210-8504	BJ60..5F			36323-60080-	1	467	554
8008-8504	BJ60,FJ60..4F			36323-60060-	1	455	554
8504-	BJ60,HJ60,FJ60..MTM			36323-60080-	1	555	
	36324A BUSH, TRANSFER SHIFT LEVER						
8412-	BJ60,HJ60			36324-60050-	2		
	36327 SHAFT, TRANSFER SHIFT LEVER						
8411-8412	BJ60	MAGNET TYPE		36327-60030-	1	515	
8412-	BJ60,HJ60	MAGNET TYPE		36327-60031-	1		
8008-	BJ60,HJ60,FJ60..MTM	DIRECT TYPE		36327-60040-	1	455	

PROD.DATE	MODELS	DESCRIPTION	R/P	PART NUMBER	QTY	REV.REF.CODE FROM	REV.REF.CODE UP TO
	36339 CLEVIS, TRANSFER SHIFT ROD						
8411-8502	BJ60			36338-60020-	1	515	
8502-	BJ60,HJ60			36338-60030-	1		
	36340 ROD ASSY, HIGH AND LOW SHIFT, NO.2						
8210-8411	BJ60..5F			36340-60050-	1	467	514
8411-8504	BJ60..5F			36340-60080-	1	515	554
8008-8504	BJ60,FJ60..4F			36340-60060-	1	455	554
8504-	BJ60,HJ60,FJ60..MTM			36340-60080-	1	555	
	36340B END ASSY (FOR HIGH & LOW SHIFT ROD)						
8411-8504	BJ60			33740-26010-	1	515	554
8008-8411	BJ60,FJ60			33740-35011-	1	455	514
8504-	BJ60,HJ60,FJ60..MTM			33740-26010-	1	555	
8411-8504	FJ60			33740-35011-	1	515	554
	36341 SHAFT, FRONT DRIVE SHIFT LINK SUPPORT						
8008-8107	BJ60,FJ60			# 36341-60030- (36341-60031-)	1	455	
8107-8210	BJ60,FJ60			# 36341-60031- (36341-60032-)	1		466
8210-	BJ60,HJ60,FJ60..MTM			36341-60032-	1	467	
	36343 SHOE, FRONT DRIVE SHIFT LINK LEVER (FOR DIRECT TYPE)						
8008-	BJ60,HJ60,FJ60..MTM			36343-60020-	1	455	
	36351A SPACER (FOR HIGH & LOW SHIFT ROD)						
8411-	BJ60,HJ60			90560-10406-	1	515	
	36351B PIN (FOR HIGH & LOW SHIFT ROD)						
8411-8502	BJ60			90240-10027-	1	515	
8502-	BJ60,HJ60			90240-10157-	1		
	36351C PIN (FOR HIGH & LOW SHIFT ROD)						
8411-	BJ60,HJ60			90240-08128-	1	515	

GENUINE TOYOTA PARTS

PROD.DATE	MODELS	DESCRIPTION	R/P	PART NUMBER	QTY	REV.REF.CODE FROM	REV.REF.CODE UP TO
	36351D GROMMET (FOR HIGH & LOW SHIFT ROD)						
8411-	BJ60,HJ60			90480-17401-	1	515	
	36362 LEVER, TRANSFER HIGH AND LOW SHIFT OUTER						
8411-8504	BJ60	DIRECT TYPE		36362-60040-	1	515	554
8008-8411	BJ60,FJ60			36362-60011-	1	455	514
8411-	BJ60,HJ60	MAGNET TYPE		36362-60020-	1	515	
8504-	BJ60,HJ60,FJ60..MTM	DIRECT TYPE		36362-60040-	1	555	
8411-8504	FJ60			36362-60011-	1	515	554

PROD.DATE | MODELS | DESCRIPTION | R/P | PART NUMBER | QTY | REV.REF.CODE FROM | REV.REF.CODE UP TO

FIG.36-12 DIAPHRAGM CYLINDER & TRANSFER VACUUM ACTUATOR

2-D7

MR4-13-0233

(8411-)

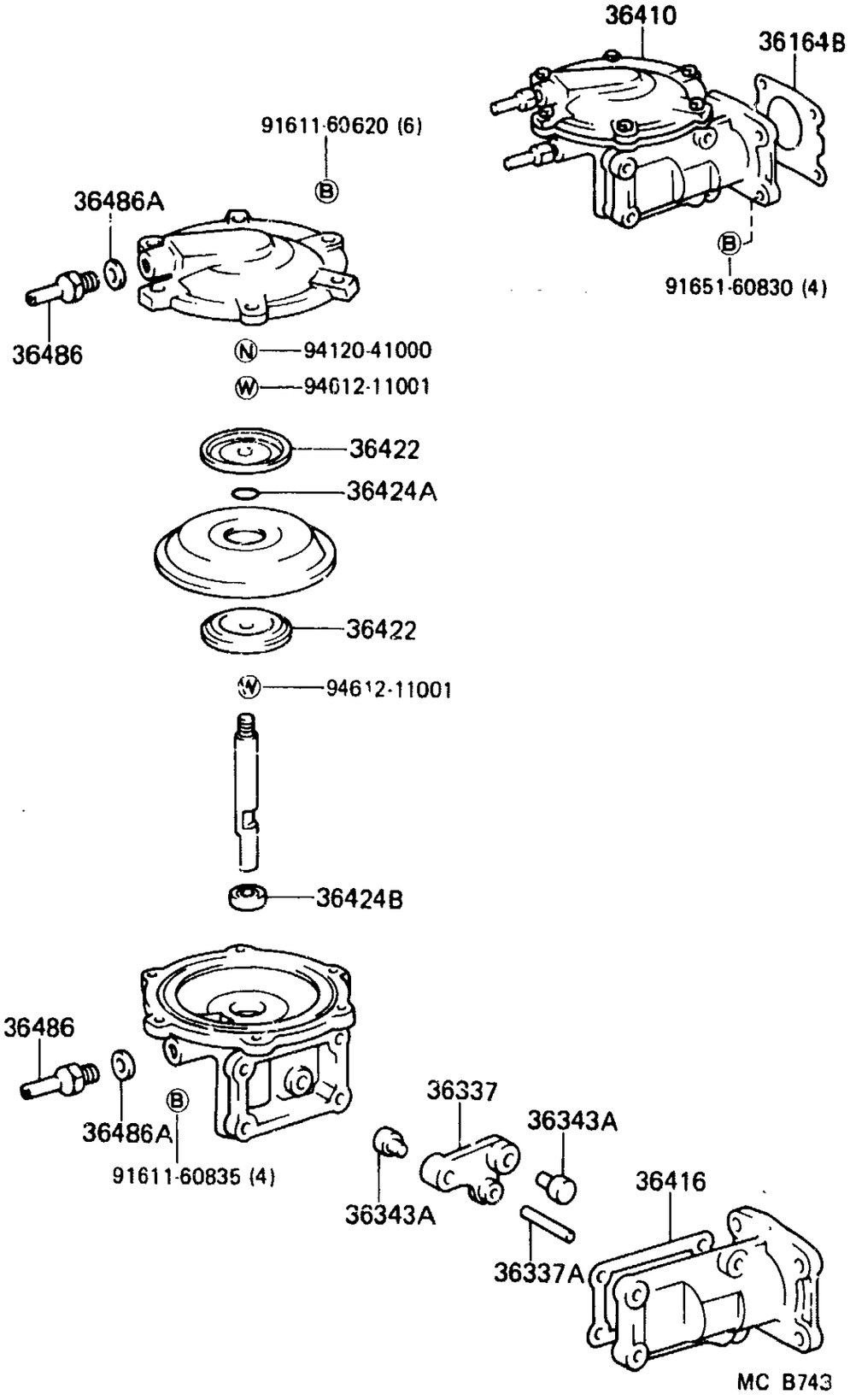

GENUINE TOYOTA PARTS

PROD.DATE	MODELS	DESCRIPTION	R/P	PART NUMBER	QTY	REV.REF.CODE FROM	REV.REF.CODE UP TO
FIG.	36-12 DIAPHRAGM CYLINDER & TRANSFER VACUUM ACTUATOR						
	36164B GASKET, TRANSFER SHIFT SHAFT GUIDE						
8411-	BJ60,HJ60			36164-60040-	1	515	
	36337 LEVER, FRONT DRIVE SHIFT LINK						
8411-	BJ60,HJ60			36337-60080-	1	515	
	36337A PIN, STRAIGHT (FOR FRONT DRIVE SHIFT LINK LEVER)						
8411-	BJ60,HJ60			90250-08024-	1	515	
	36343A SHOE, FR DRIVE SHIFT LINK LEVER (FOR VACUUM MAGNET TYPE)						
8411-	BJ60,HJ60	OD=18		36343-60010-	1	515	
8411-	BJ60,HJ60	OD=12		36343-60040-	1	515	
	36410 CYLINDER ASSY, DIAPHRAGM						
8411-	BJ60,HJ60			36410-60030-	1	515	
	36416 GASKET, DIAPHRAGM CYLINDER						
8411-	BJ60,HJ60			36416-36010-	1	515	
	36422 PLATE, TRANSFER DIAPHRAGM						
8411-	BJ60,HJ60			36422-36010-	2	515	
	36424A RING, O (FOR DIAPHRAGM PUSH ROD)						
8411-	BJ60,HJ60			96711-19010-	1	515	
	36424B SEAL, TYPE T, OIL (FOR DIAPHRAGM PUSH ROD)						
8411-	BJ60,HJ60			90311-13066-	1	515	
	36486 TUBE, SUCTION						
8411-	BJ60,HJ60			36486-60010-	2	515	
	36486A GASKET (FOR SUCTION TUBE)						
8411-	BJ60,HJ60			90430-10022-	2	515	

FIG.36-16 TRANSFER VACUUM PIPING

2-E7

MR4-11-0434

(8411-8510)BJ60

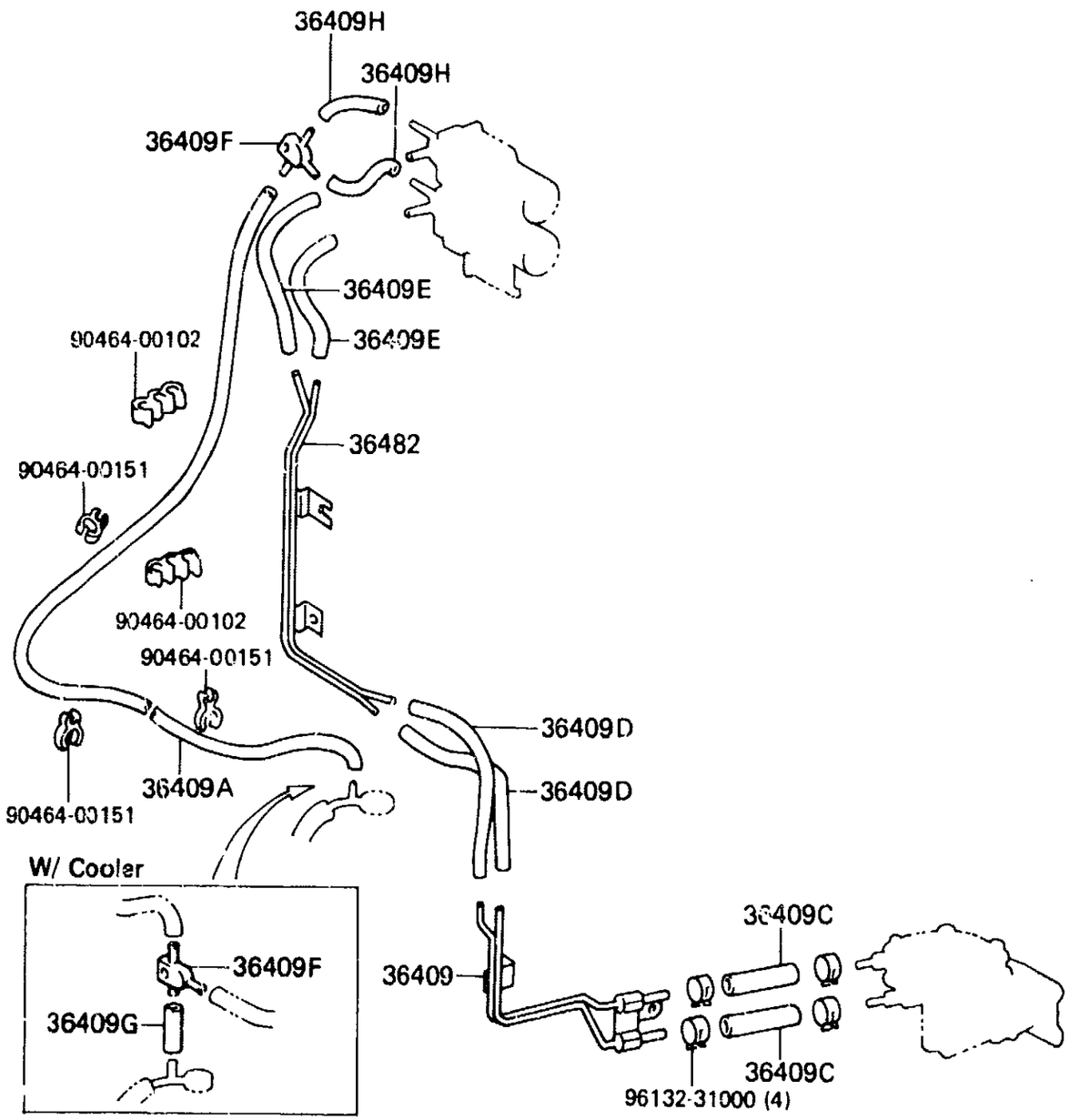

MC B941-C

(8510-)HJ60

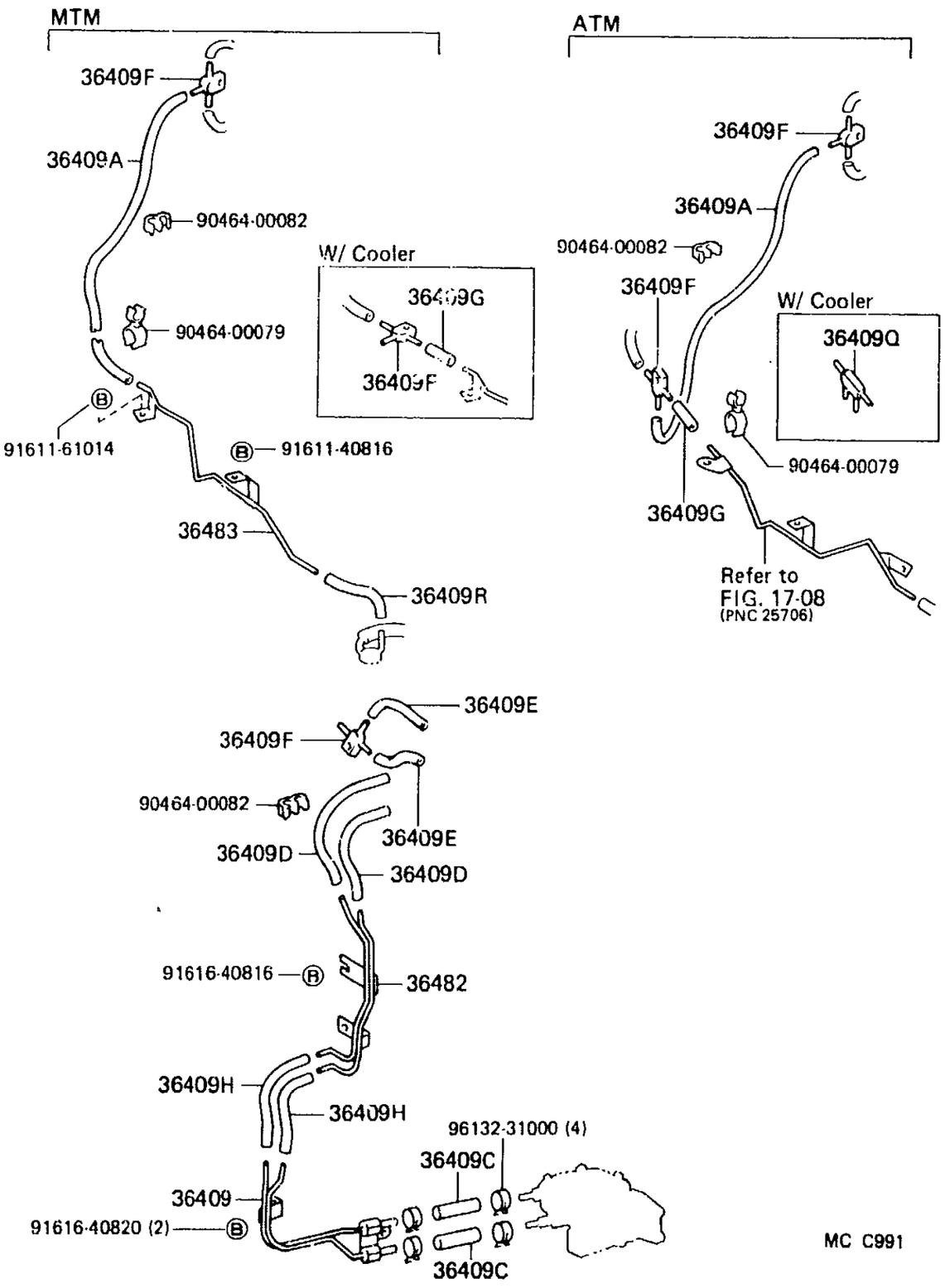

MC C991

FIG. 36-16 **GENUINE TOYOTA PARTS** 2-F7 **GENUINE TOYOTA PARTS**

PROD.DATE	MODELS	DESCRIPTION	R/P	PART NUMBER	QTY	REV.REF.CODE FROM	REV.REF.CODE UP TO
FIG.	36-16 TRANSFER VACUUM PIPING						
	36409 SUPPORT SUB-ASSY, VACUUM TUBE UNION						
8411-8510	BJ60			36409-60050-	1	515	566
8510-	HJ60			36409-60040-	1	567	
	36409A HOSE (FOR VACUUM TUBE)						
8411-8510	BJ60			# 90445-08215- (90445-08207-)	1	515	566
8411-8510	BJ60	W/COOLER,*H,L=500		95411-19960-	1	515	566
8510-	HJ60	L=600			1	567	
	36409C HOSE, VACUUM, NO.1 (FOR FRONT DRIVE SHIFT)						
8411-	BJ60,HJ60..MTM	L=200		95441-09200-	2	515	
8510-	HJ60..ATM	L=340		95441-09340-	2	567	
	36409D HOSE, VACUUM, NO.2 (FOR FRONT DRIVE SHIFT)						
8411-8510	BJ60	L=300		95411-19930-	2	515	566
8510-	HJ60	*H,L=160			2	567	
	36409E HOSE, VACUUM, NO.3 (FOR FRONT DRIVE SHIFT)						
8411-8510	BJ60	*H,L=480		95411-19960-	2	515	566
8510-	HJ60	*H,L=200		95411-19930-	2	567	
	36409F WAY, 3 (FOR FRONT DRIVE SHIFT)						
8411-	BJ60,HJ60			90413-04005-	2	515	
	36409G HOSE, VACUUM, NO.4 (FOR FRONT DRIVE SHIFT)						
8411-	BJ60,HJ60	*H,L=40,W/COOLER		95411-19930-	1	515	
8510-	HJ60..ATM	*H,L=40			1	567	
	36409H HOSE, VACUUM, NO.5 (FOR FRONT DRIVE SHIFT)						
8411-	BJ60,HJ60	*H,L=50		95411-19930-	2	515	
	36409Q WAY, 4 (FOR FRONT DRIVE SHIFT)						
8510-	HJ60..ATM	W/COOLER		90414-04002-	1	567	
	36409R HOSE, VACUUM (FOR FRONT DRIVE SHIFT)						
8510-	HJ60..MTM	*H,L=200		95411-19930-	1	567	
	36482 TUBE, FRONT DRIVE VACUUM, NO.2						
8411-8510	BJ60			36482-60110-	1	515	566
8510-	HJ60			36482-60100-	1	567	
	36483 TUBE, FRONT DRIVE VACUUM, NO.3						
8510-	HJ60..MTM			36483-60090-	1	567	

* H, L = Cut hose to length as specified in remarks

FIG.37-01 PROPELLER SHAFT & UNIVERSAL JOINT

2-G7

(8008-8411)BJ60,FJ60; (8411-8504)FJ60

ILLUST.NO. 1OF2

Constant Velocity Joint

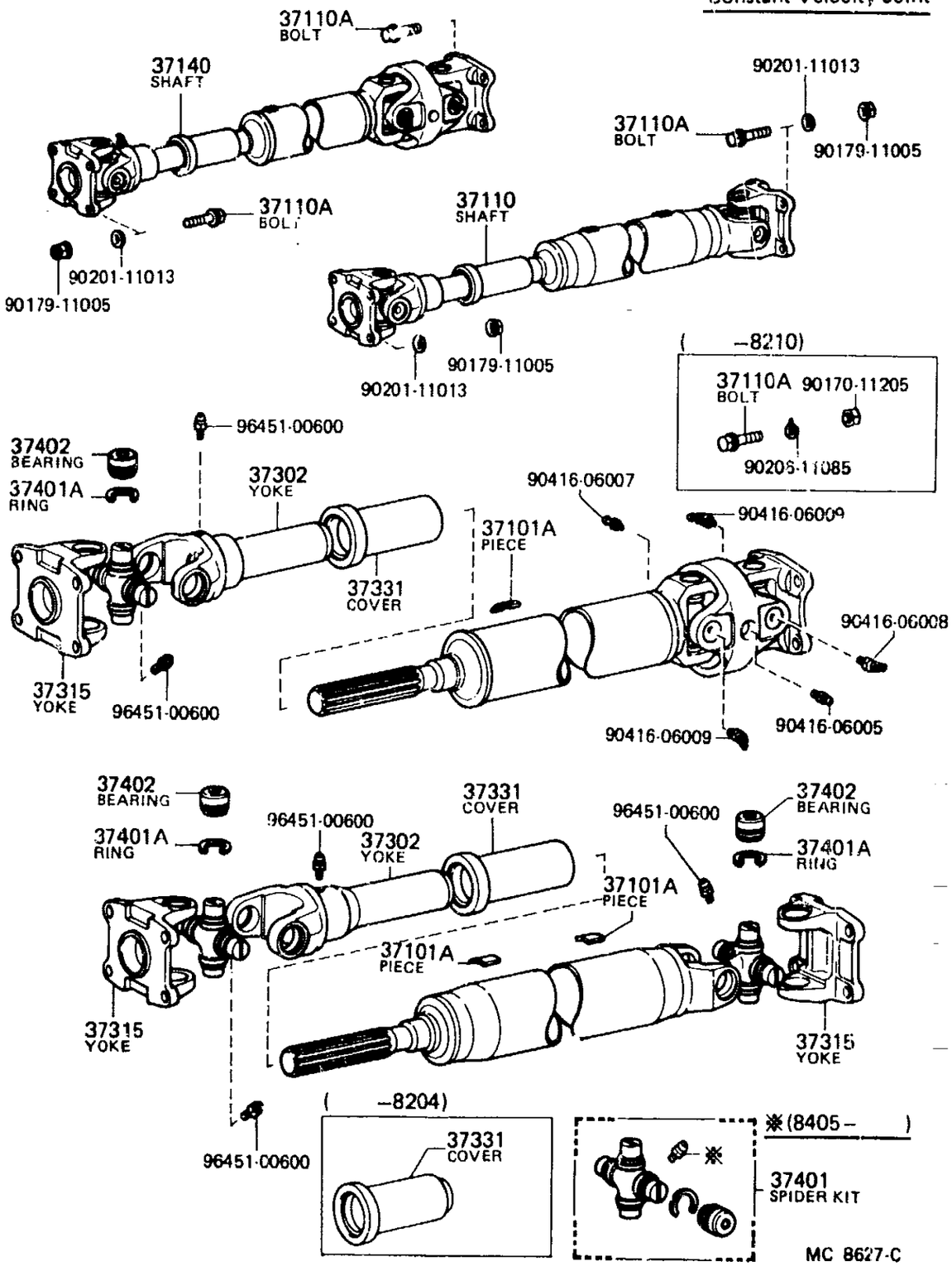

(8210-8411)BJ60,FJ60; (8411-8504)FJ60

ILLUST.NO. 2OF2

4F

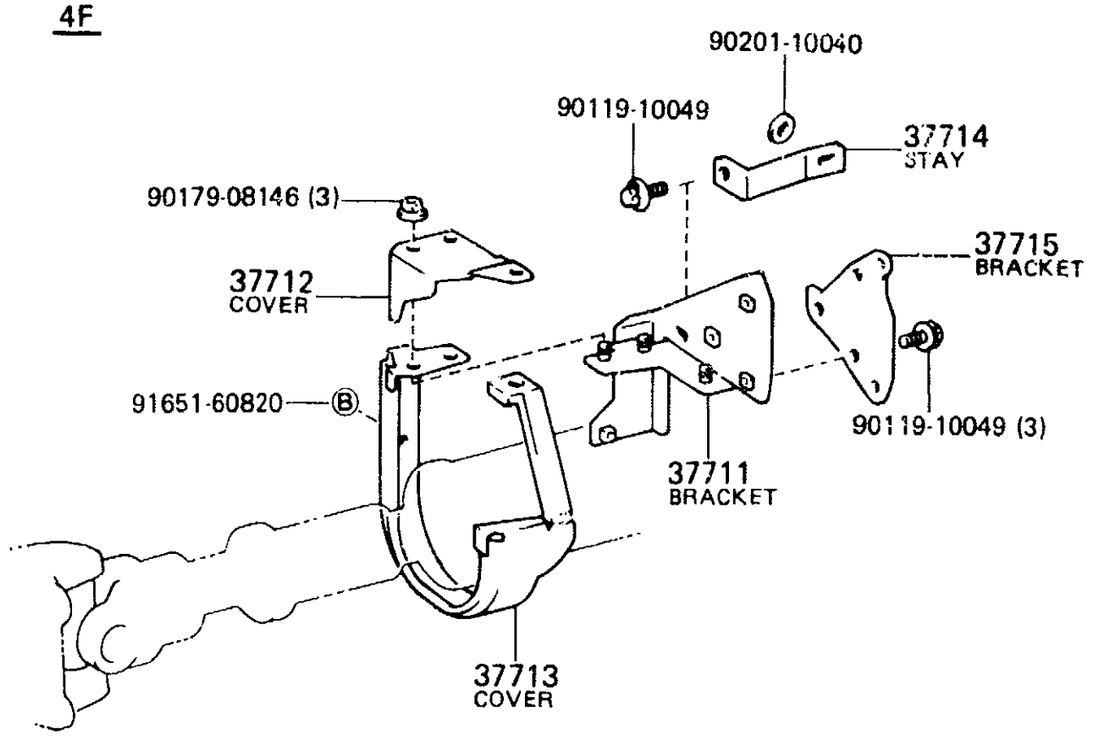

5F

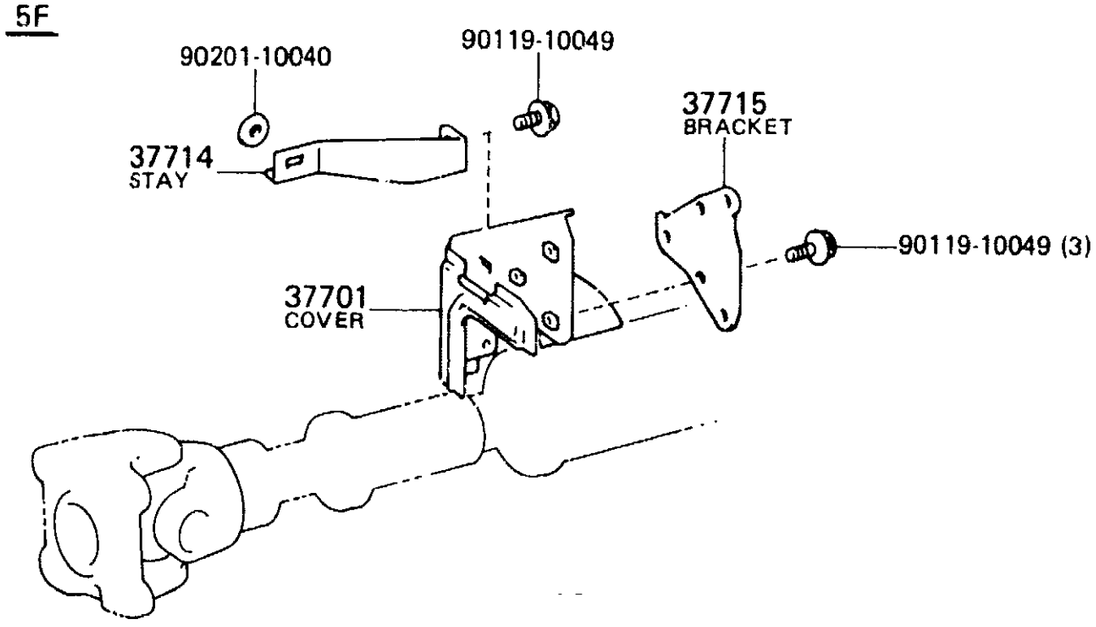

MC 9061

FIG.37-01 PROPELLER SHAFT & UNIVERSAL JOINT

2-H7

(8411-8510)BJ60; (8504-)FJ60; (8510-)HJ60

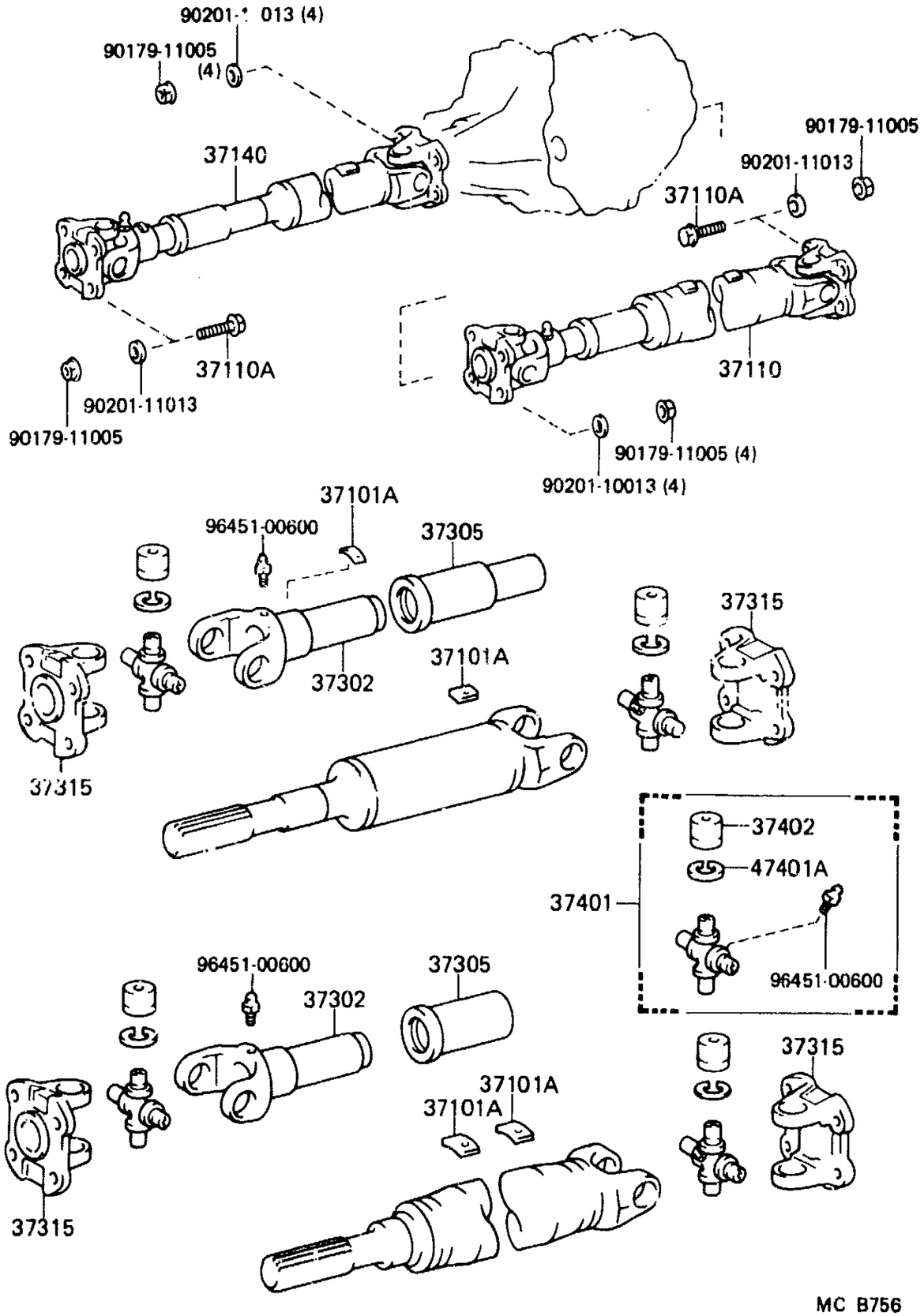

MC B756

GENUINE TOYOTA PARTS

	PROD.DATE	MODELS	DESCRIPTION	R/P	PART NUMBER	QTY	REV.REF.CODE FROM	REV.REF.CODE UP TO
	FIG.	37-01 PROPELLER SHAFT & UNIVERSAL JOINT						
		37101A	PIECE, BALANCE (FOR PROPELLER SHAFT)					
C	8008-8608	BJ60,HJ60,FJ60	20G		90937-01136-	33	455	
C	8008-8608	BJ60,HJ60,FJ60	30G		90937-01140-	33	455	
C	8008-8608	BJ60,HJ60,FJ60	16G		90937-01153-	33	455	
C	8008-8608	BJ60,HJ60,FJ60	18G		90937-01154-	33	455	
C	8008-8608	BJ60,HJ60,FJ60	22G		90937-01155-	33	455	
C	8008-8608	BJ60,HJ60,FJ60	24G		90937-01156-	33	455	
C	8008-8608	BJ60,HJ60,FJ60	26G		90937-01157-	33	455	
C	8008-8608	BJ60,HJ60,FJ60	28G		90937-01158-	33	455	
C	8008-8608	BJ60,HJ60,FJ60	24G,CONSTANT VELOCITY JOINT		90937-01198-	33	455	
C	8008-8608	BJ60,HJ60,FJ60	28G,CONSTANT VELOCITY JOINT		90937-01199-	33	455	
C	8008-8608	BJ60,HJ60,FJ60	32G,CONSTANT VELOCITY JOINT		90937-01200-	33	455	
	8008-	BJ60,HJ60,FJ60	10G		90937-01132-	33	455	
	8008-	BJ60,HJ60,FJ60	2G		90937-01147-	33	455	
	8008-	BJ60,HJ60,FJ60	4G		90937-01148-	33	455	
	8008-	BJ60,HJ60,FJ60	6G		90937-01149-	33	455	
	8008-	BJ60,HJ60,FJ60	8G		90937-01150-	33	455	
	8008-	BJ60,HJ60,FJ60	12G		90937-01151-	33	455	
	8008-	BJ60,HJ60,FJ60	14G		90937-01152-	33	455	
	8008-	BJ60,HJ60,FJ60	4G,CONSTANT VELOCITY JOINT		90937-01184-	33	455	
	8008-	BJ60,HJ60,FJ60	8G,CONSTANT VELOCITY JOINT		90937-01191-	33	455	
	8008-	BJ60,HJ60,FJ60	12G,CONSTANT VELOCITY JOINT		90937-01192-	33	455	
	8008-	BJ60,HJ60,FJ60	16G,CONSTANT VELOCITY JOINT		90937-01193-	33	455	

PROD.DATE	MODELS	DESCRIPTION	R/P	PART NUMBER	QTY	REV.REF.CODE FROM	REV.REF.CODE UP TO
	37101A PIECE, BALANCE (FOR PROPELLER SHAFT) CONTINUED						
8008-	BJ60,HJ60,FJ60	20G,CONSTANT VELOCITY JOINT		90937-01194-	33	455	
	37110 SHAFT ASSY, PROPELLER						
8210-8408	BJ60			37110-60330-	1	467	
8408-8504	BJ60			37110-36520-	1		554
8008-8408	BJ60,FJ60..4F			37110-60240-	1	455	
8408-8504	BJ60,FJ60..4F			37110-60241-	1		554
8504-	BJ60,HJ60,FJ60..MTM			37110-36520-	1	555	
8510-	HJ60..ATM			37110-60410-	1	567	
	37110A BOLT, HEXAGON (FOR PROPELLER SHAFT SETTING)						
8008-8210	BJ60,FJ60			90105-11010-	12	455	466
8210-8408	BJ60,FJ60			# 90105-11014- (90105-11013-)	12	467	
8408-	BJ60,HJ60,FJ60			90105-11013-	12		
	37140 SHAFT ASSY, PROPELLER, FRONT						
8210-8408	BJ60			37140-60161-	1	467	
8408-8411	BJ60			37140-60162-	1		514
8411-8504	BJ60			37140-60220-	1	515	554
8008-8207	BJ60,FJ60			# 37140-60120- (37140-60121-)	1	455	
8207-8408	BJ60,FJ60..4F			37140-60121-	1		
8408-8504	BJ60,FJ60..4F			37140-60122-	1		554
8504-	BJ60,HJ60,FJ60..MTM			37140-60220-	1	555	
8510-	HJ60..ATM			37140-60200-	1	567	
	37302 YOKE SUB-ASSY, UNIVERSAL JOINT SLEEVE						
8411-8504	BJ60	FR SHAFT		37302-60050-	1	515	554
8008-8411	BJ60,FJ60	FR SHAFT		37302-60040-	1	455	514
8008-8509	BJ60,FJ60	RR SHAFT		# 37302-36010- (37302-36H00-)	1	455	
8504-	BJ60,HJ60,FJ60	FR SHAFT		37302-60050-	1	555	
8509-	BJ60,HJ60,FJ60	RR SHAFT		37302-36020-	1		

PROD.DATE	MODELS	DESCRIPTION	R/P	PART NUMBER	QTY	REV.REF.CODE FROM	REV.REF.CODE UP TO
	37302 YOKE SUB-ASSY, UNIVERSAL JOINT SLEEVE CONTINUED						
8411-8504	FJ60	FR SHAFT		37302-60040-	1	1061	1100
	37305 COVER SUB-ASSY, SLIDING SHAFT DUST						
8411-8504	BJ60	RR SHAFT		37305-36010-	1	515	554
8411-8504	BJ60	FR SHAFT		37305-60010-	1	515	554
8504-8509	BJ60,FJ60	RR SHAFT		37305-36010-	1	555	
8509-	BJ60,FJ60	RR SHAFT		37305-36020-	1		
8504-	BJ60,HJ60,FJ60	FR SHAFT		37305-60010-	1	555	
	37315 YOKE, UNIVERSAL JOINT FLANGE						
8008-8408	BJ60,FJ60			37315-36010-	3	455	
8408-	BJ60,HJ60,FJ60			37315-36020-	3		
	37331 COVER, SLIDING SHAFT DUST						
8008-8204	BJ60,FJ60			37305-25010-	2	455	
8204-8411	BJ60,FJ60			37305-36010-	2		514
8411-8504	FJ60				2	515	554
	37401 SPIDER KIT, UNIVERSAL JOINT						
8008-8405	BJ60,FJ60			# 04371-36021- (04371-36030-)	3	455	
8405-	BJ60,HJ60,FJ60			04371-36030-	3		
	37401A RING, HOLE SNAP (FOR SPIDER BEARING)						
8008-8405	BJ60,FJ60	T=1.53		90520-29002-	12	455	
8008-8405	BJ60,FJ60	T=1.50		90520-29286-	12	455	
8008-8405	BJ60,FJ60	T=1.56		90520-29287-	12	455	
8008-8405	BJ60,FJ60	T=1.59		90520-29288-	12	455	
8405-	BJ60,HJ60,FJ60	T=2.00		90520-29024-	12		
8405-	BJ60,HJ60,FJ60	T=2.03		90520-29025-	12		
8405-	BJ60,HJ60,FJ60	T=2.06		90520-29026-	12		
8405-	BJ60,HJ60,FJ60	T=2.09		90520-29027-	12		
	37402 BEARING SUB-ASSY, UNIVERSAL JOINT SPIDER						
8008-8405	BJ60,FJ60			* 37402-36060-	12	455	

GENUINE TOYOTA PARTS

PROD.DATE	MODELS	DESCRIPTION	R/P	PART NUMBER	QTY	REV.REF.CODE FROM	REV.REF.CODE UP TO
	37402 BEARING SUB-ASSY, UNIVERSAL JOINT SPIDER CONTINUED						
8405-	BJ60,HJ60,FJ60			37402-36080-	12		
	37701 COVER SUB-ASSY, PROPELLER SHAFT DUST						
8210-8411	BJ60			37701-60010-	1	467	514
	37711 BRACKET, PROPELLER SHAFT DUST COVER, NO.1						
8210-8504	FJ60			37711-60020-	1	467	554
	37712 COVER, PROPELLER SHAFT DUST, NO.1						
8210-8504	FJ60			37712-60020-	1	467	554
	37713 COVER, PROPELLER SHAFT DUST, NO.2						
8210-8504	FJ60			37713-60010-	1	467	554
	37714 STAY, PROPELLER SHAFT DUST COVER						
8210-8411	BJ60			37714-60010-	1	467	514
8210-8504	FJ60			37714-60020-	1	467	554
	37715 BRACKET, PROPELLER SHAFT DUST COVER, NO.2						
8210-8411	BJ60,FJ60			37715-60010-	1	467	514
8411-8504	FJ60				1	515	554

PROD.DATE	MODELS	DESCRIPTION	R/P	PART NUMBER	QTY	REV.REF.CODE FROM	REV.REF.CODE UP TO

FIG.38-01 WINCH KIT

2-K7

MR4-13-0235

GENUINE TOYOTA PARTS

(8008-8504)

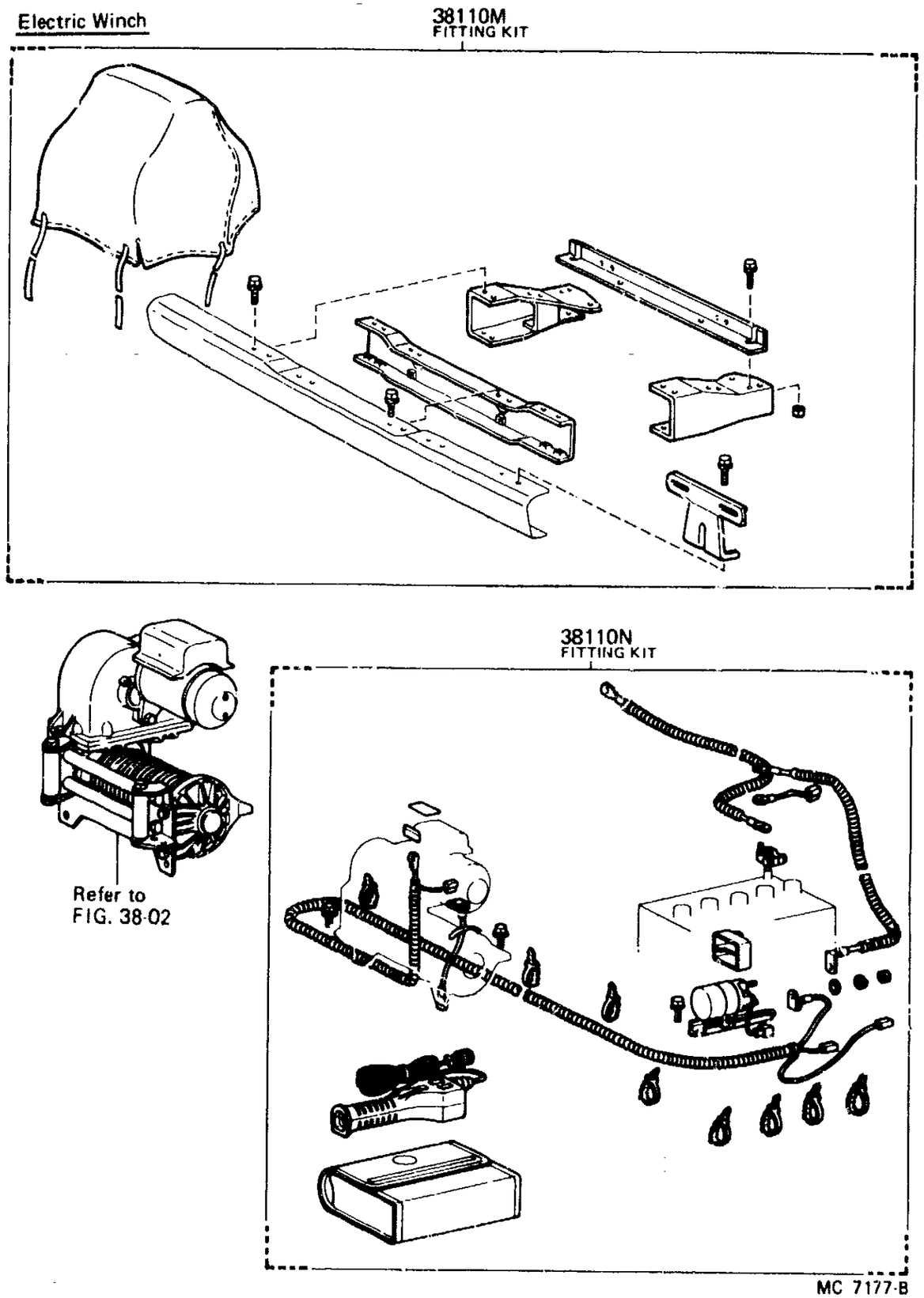

PROD.DATE	MODELS	DESCRIPTION	R/P	PART NUMBER	QTY	REV.REF.CODE FROM	REV.REF.CODE UP TO
FIG.	38-01 WINCH KIT						
	38110M FITTING KIT, NO.1, WINCH						
8008-8411	BJ60,FJ60			04383-60070-	1	455	514
8411-8504	FJ60				1	515	554
	38110N FITTING KIT, NO.2, WINCH						
8008-8411	BJ60			04384-60060-	1	455	514
8008-8504	FJ60			04384-60050-	1	455	554

(8008-8502)BJ60,FJ60; (8502-8510)FJ60

ILLUST•NO• 10F4

(-8210)

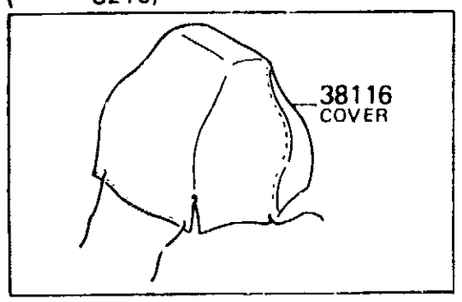

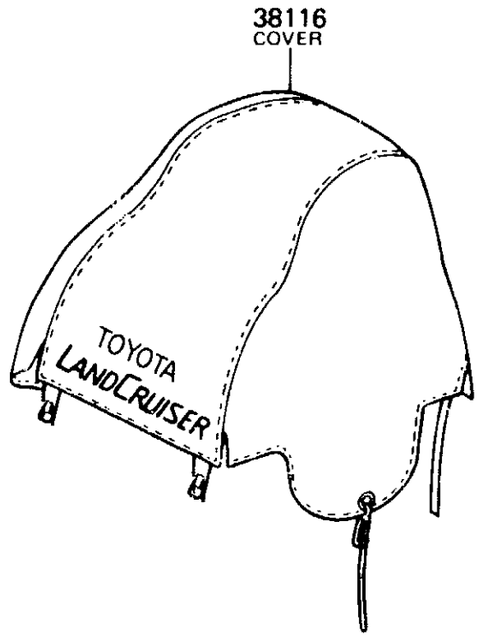

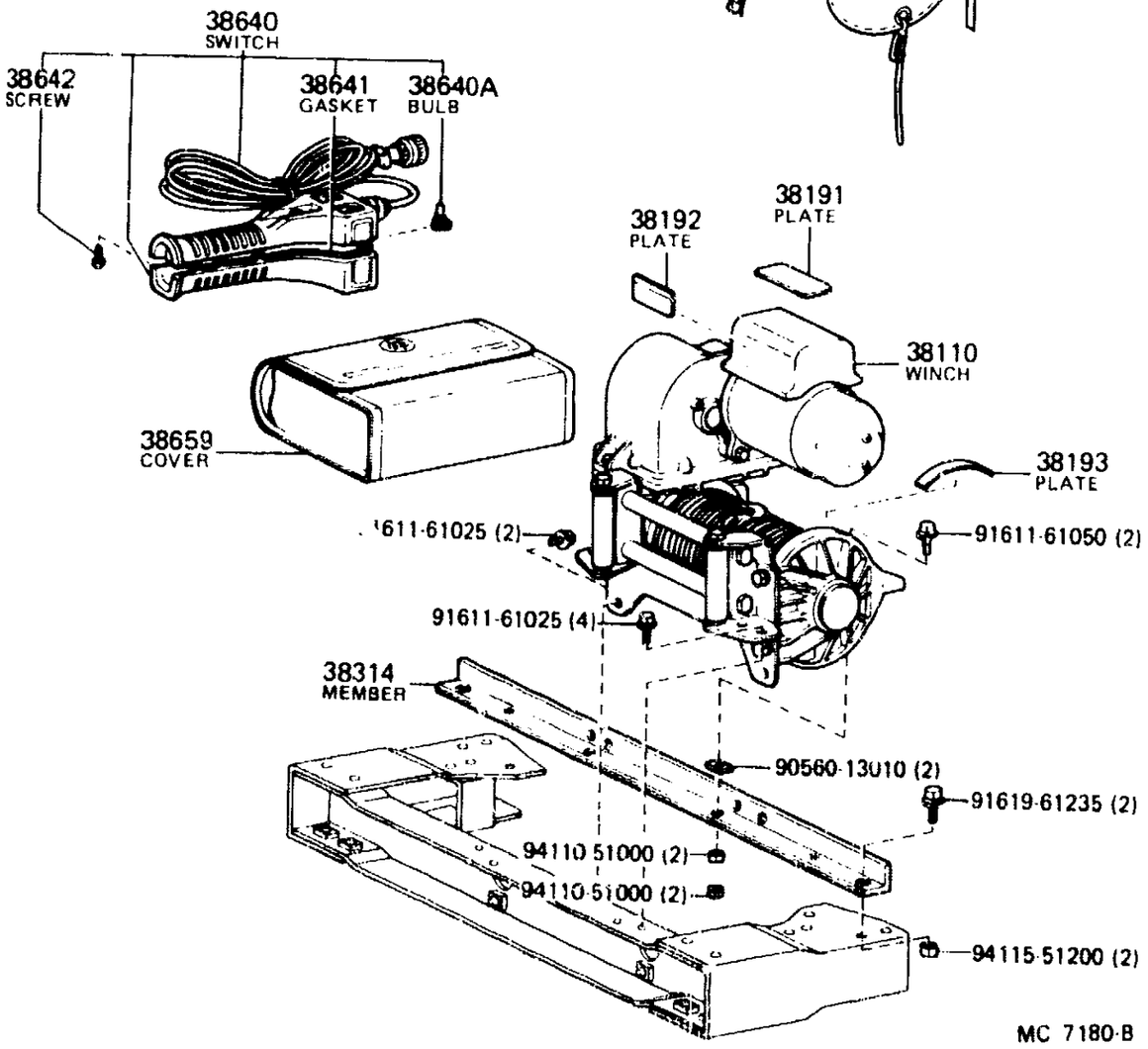

MC 7180-B

ILLUST•NO• 20F4

ELECTRICAL WINCH

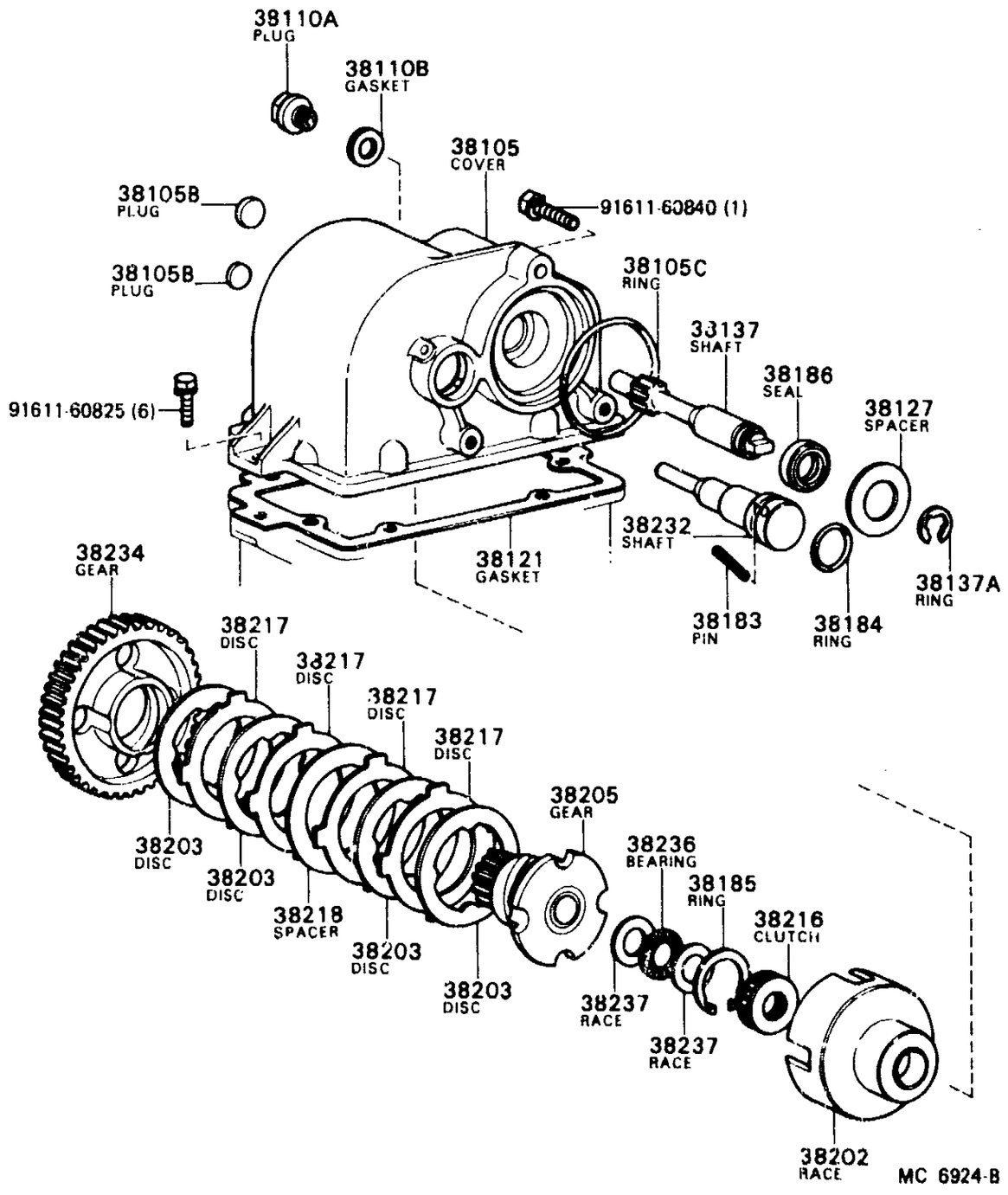

MC 6924-B

(8008-8502)BJ60,FJ60; (8502-8510)FJ60

ILLUST.NO. 3OF4

ELECTRICAL WINCH

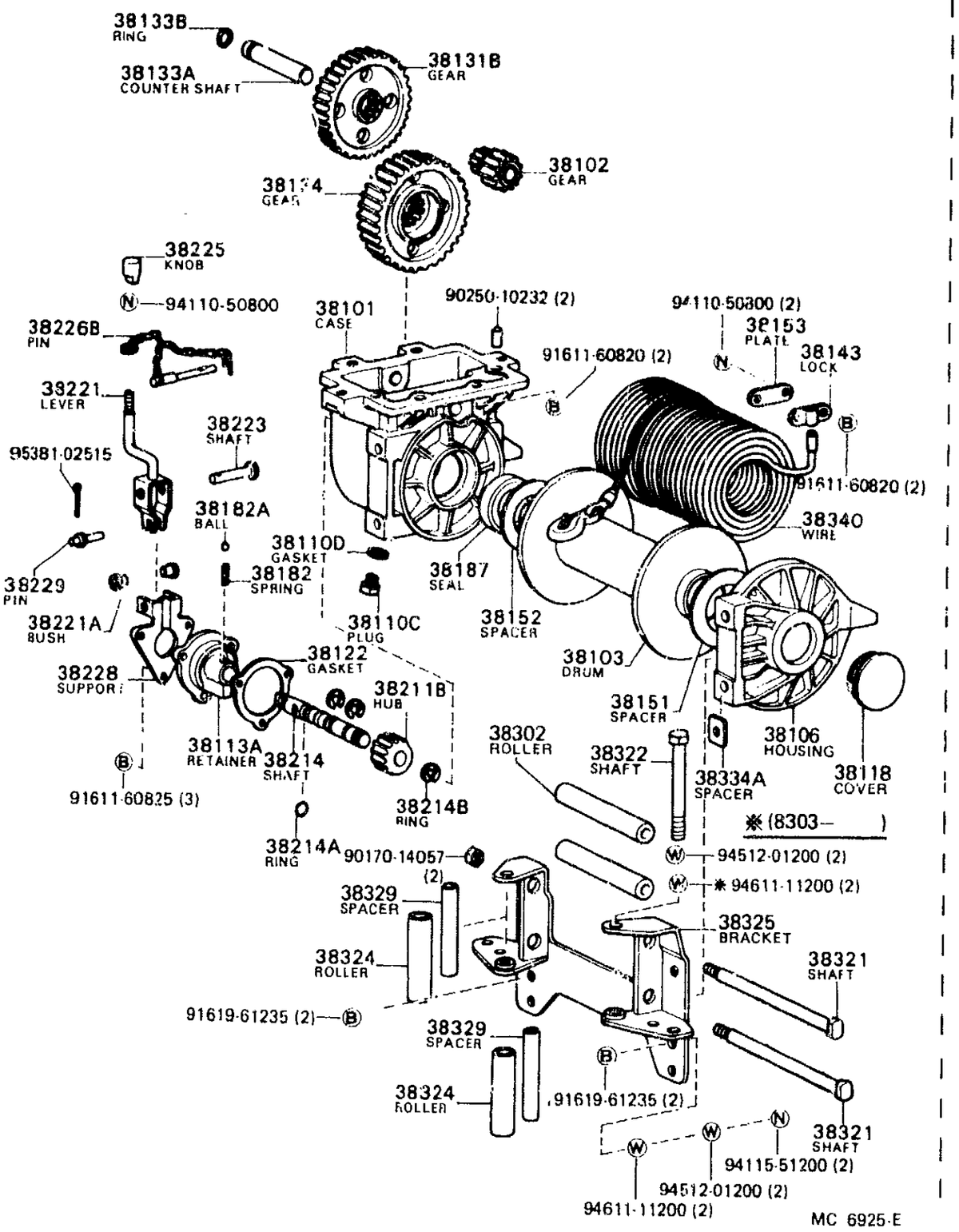

MC 6925-E

ILLUST.NO. 4OF4

ELECTRICAL WINCH

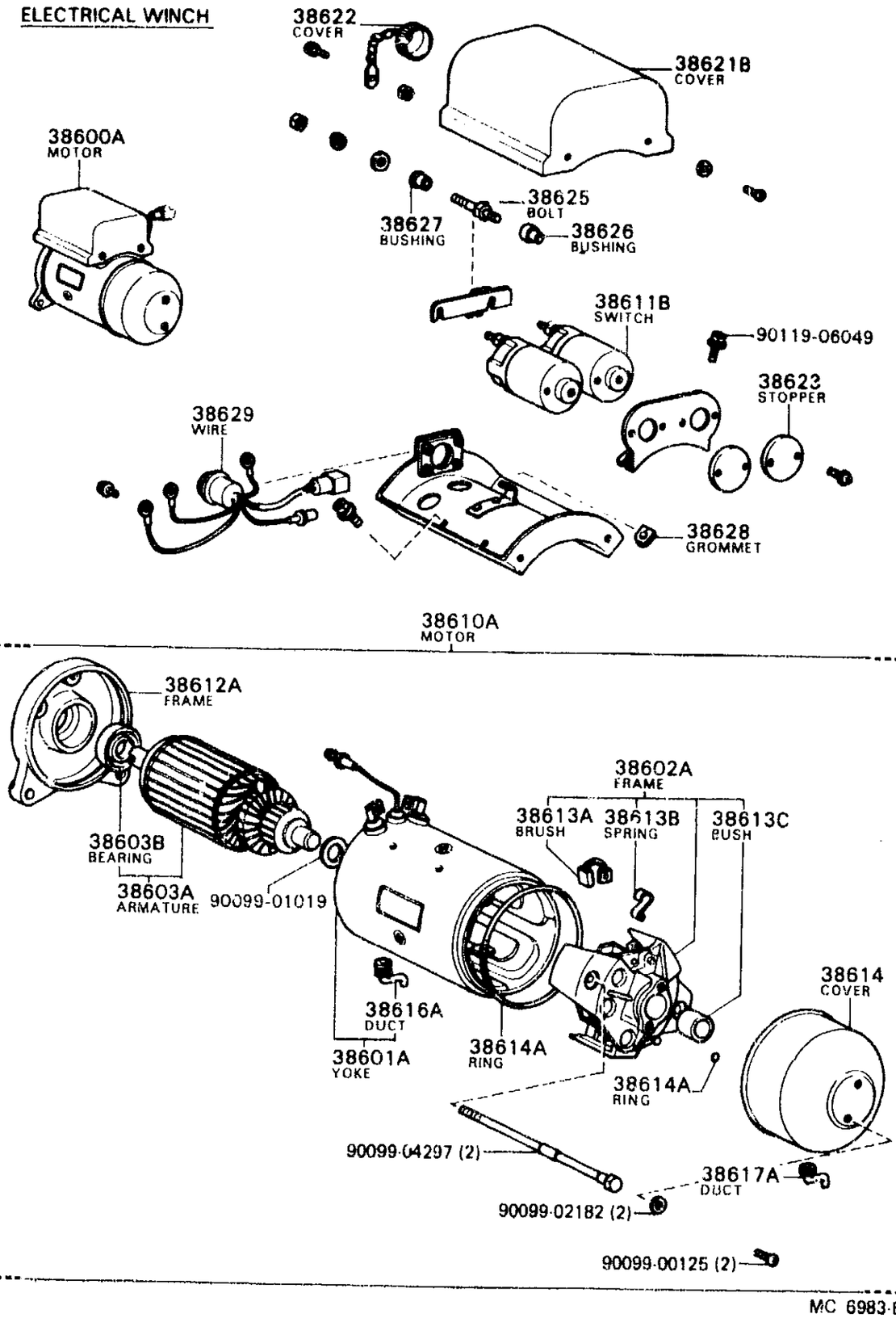

MC 6983-B

	PROD.DATE	MODELS	DESCRIPTION	R/P	PART NUMBER	QTY	REV.REF.CODE FROM	REV.REF.CODE UP TO
	FIG•	38-02 WINCH						
		38101 CASE SUB-ASSY, WINCH GEAR						
	8008-8502	BJ60,FJ60			38101-60040-	1	455	
C	8502-8510	FJ60				1		566
		38102 GEAR SUB-ASSY, COUNTERSHAFT						
	8008-8502	BJ60,FJ60			38102-60040-	1	455	
C	8502-8510	FJ60				1		566
		38103 DRUM SUB-ASSY, WINCH						
	8008-8502	BJ60,FJ60			38103-60040-	1	455	
C	8502-8510	FJ60				1		566
		38105 COVER SUB-ASSY, WINCH GEAR CASE						
	8008-8210	BJ60,FJ60			38105-60040-	1	455	466
	8210-8502	BJ60,FJ60			38105-60041-	1	467	
C	8502-8510	FJ60				1		566
		38105B PLUG, TIGHT (FOR WINCH GEAR CASE COVER)						
	8008-8502	BJ60,FJ60	OD=16		90331-16050-	1	455	
	8008-8502	BJ60,FJ60	OD=20	#	90331-20001- (90331-20044-)	1	455	
C	8502-8510	FJ60	OD=16		90331-16050-	1		566
C	8502-8510	FJ60	OD=20	#	90331-20001- (90331-20044-)	1		566
		38105C RING, O (FOR WINCH GEAR CASE COVER)						
	8008-8502	BJ60,FJ60			90301-59044-	1	455	
C	8502-8510	FJ60				1		566
		38106 HOUSING SUB-ASSY, WINCH DRUM						
	8008-8502	BJ60,FJ60			38106-60040-	1	455	
C	8502-8510	FJ60				1		566
		38110 WINCH ASSY						
	8411-8502	BJ60			38110-60072-	1	515	

	PROD.DATE	MODELS	DESCRIPTION	R/P	PART NUMBER	QTY	REV.REF.CODE FROM	REV.REF.CODE UP TO
		38110 WINCH ASSY CONTINUED						
	8008-8302	BJ60,FJ60		#	38110-60070- (38110-60071-)	1	455	
	8302-8411	BJ60,FJ60			38110-60071-	1		514
	8411-8504	FJ60				1		554
C	8504-8510	FJ60			38110-60072-	1	555	566
		38110A PLUG, FILLER						
	8411-8502	BJ60			90341-18006-	1	515	
	8008-8411	BJ60,FJ60			90341-18002-	1	455	514
	8411-8504	FJ60				1	515	554
C	8504-8510	FJ60			90341-18006-	1	555	566
		38110B GASKET (FOR FILLER PLUG)						
	8411-8502	BJ60			90430-18008-	1	515	
	8008-8201	BJ60,FJ60			12157-10010-	1	455	
	8201-8411	BJ60,FJ60			90430-18007-	1		514
	8411-8504	FJ60				1	515	554
	8504-	FJ60			90430-18008-	1	555	
		38110C PLUG, DRAIN						
	8008-8502	BJ60,FJ60			90341-18057-	1	455	
C	8502-8510	FJ60				1		566
		38110D GASKET (FOR DRAIN PLUG)						
	8411-8502	BJ60			90430-18008-	1	515	
	8008-8201	BJ60,FJ60			12157-10010-	1	455	
	8201-8411	BJ60,FJ60			90430-18007-	1		514
	8411-8504	FJ60				1	515	554
C	8504-8510	FJ60			90430-18008-	1	555	566
		38113A RETAINER, SHIFT SHAFT						
	8008-8502	BJ60,FJ60			38113-60040-	1	455	
C	8502-8510	FJ60				1		566

	PROD.DATE	MODELS	DESCRIPTION	R/P	PART NUMBER	QTY	REV.REF.CODE FROM	REV.REF.CODE UP TO
		38116 COVER, WINCH						
	8008-8210	BJ60,FJ60			38116-60010-	1	455	466
	8210-8502	BJ60,FJ60			38286-60010-	1	467	
C	8502-8510	FJ60				1		566
		38118 COVER, WINCH DRUM HOUSING						
	8008-8502	BJ60,FJ60			38118-60040-	1	455	
C	8502-8510	FJ60				1		566
		38121 GASKET, WINCH GEAR CASE COVER						
	8008-8502	BJ60,FJ60			38121-60040-	1	455	
C	8502-8510	FJ60				1		566
		38122 GASKET, SHIFT SHAFT RETAINER						
	8008-8502	BJ60,FJ60			38122-60040-	1	455	
C	8502-8510	FJ60				1		566
		38127 SPACER, INPUT SHAFT						
	8008-8502	BJ60,FJ60			38127-60040-	1	455	
C	8502-8510	FJ60				1		566
		38131B GEAR, COUNTER, NO.1						
	8008-8502	BJ60,FJ60			38131-60040-	1	455	
C	8502-8510	FJ60				1		566
		38133A COUNTER SHAFT						
	8008-8502	BJ60,FJ60			38133-60040-	1	455	
C	8502-8510	FJ60				1		566
		38133B RING, O (FOR COUNTER SHAFT)						
	8008-8411	BJ60,FJ60			# 96710-02014- (96711-24014-)	1	455	514
	8411-8502	BJ60,FJ60			96711-24014-	1	515	
C	8502-8510	FJ60				1		566
		38134 GEAR, WINCH OUTPUT						
	8008-8502	BJ60,FJ60			38134-60040-	1	455	

GENUINE TOYOTA PARTS

	PROD.DATE	MODELS	DESCRIPTION	R/P	PART NUMBER	QTY	REV.REF.CODE FROM	REV.REF.CODE UP TO
		38134 GEAR, WINCH OUTPUT CONTINUED						
C	8502-8510	FJ60			38134-60040-	1		566
		38137 SHAFT, WINCH INPUT						
	8008-8502	BJ60,FJ60			38137-60040-	1	455	
C	8502-8510	FJ60				1		566
		38137A RING, E (FOR WINCH INPUT SHAFT)						
	8008-8502	BJ60,FJ60			96160-01500-	1	455	
C	8502-8510	FJ60				1		566
		38143 LOCK, WIRE						
	8008-8502	BJ60,FJ60			38143-60010-	1	455	
C	8502-8510	FJ60				1		566
		38151 SPACER, WINCH DRUM, NO.1						
	8008-8502	BJ60,FJ60			38151-60040-	1	455	
C	8502-8510	FJ60				1		566
		38152 SPACER, WINCH DRUM, NO.2						
	8008-8502	BJ60,FJ60			38152-60040-	1	455	
C	8502-8510	FJ60				1		566
		38153 PLATE, WIRE LOCK						
	8008-8502	BJ60,FJ60			38153-60040-	1	455	
C	8502-8510	FJ60				1		566
		38182 SPRING, SHIFT LOCK						
	8008-8502	BJ60,FJ60			38182-60040-	1	455	
C	8502-8510	FJ60				1		566
		38182A BALL (FOR SHIFT LOCK SPRING)						
	8008-8502	BJ60,FJ60			90360-06004-	1	455	
C	8502-8510	FJ60				1		566
		38183 PIN, BRAKE SHAFT LOCK						
	8008-8210	BJ60,FJ60	L=48		38183-60040-	1	455	466

	PROD.DATE	MODELS	DESCRIPTION	R/P	PART NUMBER	QTY	REV.REF.CODE FROM	REV.REF.CODE UP TO
		38183 PIN, BRAKE SHAFT LOCK CONTINUED						
	8210-8502	BJ60,FJ60	L=60		38183-60041-	1	467	
C	8502-8510	FJ60	L=60			1		566
		38184 RING, BRAKE SHAFT, O						
	8008-8210	BJ60,FJ60	ID=31		38184-60040-	1	455	466
	8210-8502	BJ60,FJ60	L=41.5		38184-60041-	1	467	
C	8502-8510	FJ60	L=41.5			1		566
		38185 RING, CLUTCH OUTER RACE SNAP						
	8008-8210	BJ60,FJ60	OD=47.5		38185-60040-	1	455	466
	8210-8502	BJ60,FJ60	OD=57		38185-60041-	1	467	
C	8502-8510	FJ60	OD=57			1		566
		38186 SEAL, GEAR CASE COVER OIL						
	8008-8502	BJ60,FJ60			38186-60040-	1	455	
C	8502-8510	FJ60				1		566
		38187 SEAL, GEAR CASE OIL						
	8008-8502	BJ60,FJ60			38187-60040-	1	455	
C	8502-8510	FJ60				1		566
		38191 PLATE, CAUTION, NO.1						
	8008-8502	BJ60,FJ60			38191-60010-	1	455	
C	8502-8510	FJ60				1		566
		38192 PLATE, CAUTION, NO.2						
C	8008-8510	BJ60,FJ60			38192-60010-	1	455	566
		38193 PLATE, CAUTION, NO.3						
	8008-8502	BJ60,FJ60			38193-60010-	1	455	
C	8502-8510	FJ60				1		566
		38202 RACE SUB-ASSY, CLUTCH, OUTER						
	8008-8210	BJ60,FJ60			38202-60040-	1	455	466
	8210-8502	BJ60,FJ60			38202-60041-	1	467	

GENUINE TOYOTA PARTS

	PROD.DATE	MODELS	DESCRIPTION	R/P	PART NUMBER	QTY	REV.REF.CODE FROM	REV.REF.CODE UP TO
		38202 RACE SUB-ASSY, CLUTCH, OUTER CONTINUED						
C	8502-8510	FJ60			38202-60041-	1		566
		38203 DISC SUB-ASSY, CLUTCH, INNER						
	8008-8502	BJ60,FJ60			38203-60040-	4	455	
C	8502-8510	FJ60				4		566
		38205 GEAR SUB-ASSY, BRAKE SHAFT DRIVEN						
	8008-8502	BJ60,FJ60			38205-60040-	1	455	
C	8502-8510	FJ60				1		566
		38211B HUB, WINCH CLUTCH						
	8008-8502	BJ60,FJ60			38211-60040-	1	455	
C	8502-8510	FJ60				1		566
		38214 SHAFT, CLUTCH HUB SHIFT						
	8008-8502	BJ60,FJ60			38214-60040-	1	455	
C	8502-8510	FJ60				1		566
		38214A RING, O (FOR CLUTCH HUB SHIFT SHAFT)						
	8008-8502	BJ60,FJ60			90301-11053-	1	455	
C	8502-8510	FJ60				1		566
		38214B RING, E (FOR CLUTCH HUB SHIFT SHAFT)						
	8008-8502	BJ60,FJ60			96160-01200-	3	455	
C	8502-8510	FJ60				3		566
		38216 CLUTCH, 1 WAY						
	8008-8210	BJ60,FJ60	OD=44.425		38216-60040-	1	455	466
	8210-8502	BJ60,FJ60	OD=53.980		38216-60041-	1	467	
C	8502-8510	FJ60	OD=53.980			1		566
		38217 DISC, CLUTCH, OUTER						
	8008-8502	BJ60,FJ60			38217-60040-	4	455	
C	8502-8510	FJ60				4		566

	PROD.DATE	MODELS	DESCRIPTION	R/P	PART NUMBER	QTY	REV.REF.CODE FROM	REV.REF.CODE UP TO
		38218	SPACER, CLUTCH DISC					
	8008-8502	BJ60,FJ60			38218-60040-	1	455	
C	8502-8510	FJ60				1		566
		38221	LEVER, CLUTCH HUB SHIFT					
	8008-8502	BJ60,FJ60			38221-60040-	1	455	
C	8502-8510	FJ60				1		566
		38221A	BUSH (FOR CLUTCH HUB SHIFT LEVER)					
	8008-8411	BJ60,FJ60			# 90386-10121- (90386-10015-)	2	455	514
	8411-8502	BJ60,FJ60			90385-10015-	2	515	
C	8502-8510	FJ60				2		566
		38223	SHAFT, CLUTCH SHIFT LEVER					
	8008-8502	BJ60,FJ60			38223-60040-	1	455	
C	8502-8510	FJ60				1		566
		38225	KNOB, WINCH CLUTCH LEVER					
	8008-8502	BJ60,FJ60			38225-60040-	1	455	
C	8502-8510	FJ60				1		566
		38226B	PIN, CLUTCH SHIFT LEVER LOCK					
	8008-8502	BJ60,FJ60			38226-60040-	1	455	
C	8502-8510	FJ60				1		566
		38228	SUPPORT, CLUTCH SHIFT LEVER					
	8008-8502	BJ60,FJ60			38228-60040-	1	455	
C	8502-8510	FJ60				1		566
		38229	PIN, CLUTCH SHIFT LEVER					
	8008-8502	BJ60,FJ60			38229-60040-	1	455	
C	8502-8510	FJ60				1		566
		38232	SHAFT, WINCH BRAKE					
	8008-8210	BJ60,FJ60			38232-60040-	1	455	466
	8210-8502	BJ60,FJ60			38232-60041-	1	467	

	PROD.DATE	MODELS	DESCRIPTION	R/P	PART NUMBER	QTY	REV.REF.CODE FROM	REV.REF.CODE UP TO
		38232 CONTINUED	SHAFT, WINCH BRAKE					
C	8502-8510	FJ60			38232-60041-	1		566
		38234	GEAR, BRAKE SHAFT DRIVE					
	8008-8502	BJ60,FJ60			38234-60040-	1	455	
C	8502-8510	FJ60				1		566
		38236	BEARING, GEAR THRUST					
	8008-8502	BJ60,FJ60			38236-60040-	1	455	
C	8502-8510	FJ60				1		566
		38237	RACE, GEAR THRUST BEARING					
	8008-8502	BJ60,FJ60			38237-60040-	2	455	
C	8502-8510	FJ60				2		566
		38302	ROLLER SUB-ASSY, WINCH WIRE GUIDE					
	8008-8303	BJ60,FJ60			38302-60010-	2	455	
	8303-8502	BJ60,FJ60			38323-60040-	2		
C	8502-8510	FJ60				2		566
		38314	MEMBER, REAR BASE					
	8008-8502	BJ60,FJ60			38314-60060-	1	455	
C	8502-8510	FJ60				1		566
		38321	SHAFT, WINCH ROLLER					
	8008-8502	BJ60,FJ60			38321-60010-	2	455	
C	8502-8510	FJ60				2		566
		38322	SHAFT, WINCH ROLLER, NO.2					
	8008-8303	BJ60,FJ60			38322-60040-	2	455	
	8303-8502	BJ60,FJ60			90101-12029-	2		
C	8502-8510	FJ60				2		566
		38324	ROLLER, WINCH WIRE GUIDE, NO.2					
	8008-8502	BJ60,FJ60			38324-60040-	2	455	
C	8502-8510	FJ60				2		566

GENUINE TOYOTA PARTS

	PROD.DATE	MODELS	DESCRIPTION	R/P	PART NUMBER	QTY	REV.REF.CODE FROM	REV.REF.CODE UP TO
		38325 BRACKET, WINCH ROLLER, NO.1						
	8008-8502	BJ60,FJ60			38325-60070-	1	455	
C	8502-8510	FJ60				1		566
		38329 SPACER, WINCH WIRE GUIDE ROLLER						
	8008-8502	BJ60,FJ60			38329-60040-	2	455	
C	8502-8510	FJ60				2		566
		38334A SPACER, REAR MEMBER						
	8008-8502	BJ60,FJ60			38334-60040-	4	455	
C	8502-8510	FJ60				4		566
		38340 WIRE ASSY, CHAIN						
	8411-8502	BJ60			38340-60050-	1	515	
	8008-8411	BJ60,FJ60			38340-60040-	1	455	514
	8411-8504	FJ60				1	515	554
C	8504-8510	FJ60			38340-60050-	1	555	566
		38600A MOTOR ASSY, W/MAGNET SWITCH, WINCH						
	8008-8502	BJ60,FJ60			38600-60010-	1	455	
C	8502-8510	FJ60				1		566
		38601A YOKE SUB-ASSY, WINCH						
	8008-8502	BJ60,FJ60			38601-60010-	1	455	
C	8502-8510	FJ60				1		566
		38602A FRAME SUB-ASSY, CUMMUTATOR END (FOR WINCH MOTER)						
	8008-8502	BJ60,FJ60			38602-60010-	1	455	
C	8502-8510	FJ60				1		566
		38603A ARMATURE SUB-ASSY, WINCH						
	8008-8502	BJ60,FJ60			38603-60010-	1	455	
C	8502-8510	FJ60				1		566
		38603B BEARING (FOR WINCH MOTOR ARMATURE)						
	8008-8502	BJ60,FJ60			90099-10130-	1	455	

	PROD.DATE	MODELS	DESCRIPTION	R/P	PART NUMBER	QTY	REV.REF.CODE FROM	REV.REF.CODE UP TO
		38603B BEARING (FOR WINCH MOTOR ARMATURE) CONTINUED						
C	8502-8510	FJ60			90099-10130-	1		566
		38610A MOTOR ASSY, WINCH						
	8008-8502	BJ60,FJ60			38610-60010-	1	455	
C	8502-8510	FJ60				1		566
		38611B SWITCH, MAGNET, NO.2 (FOR WINCH MOTOR)						
	8008-8502	BJ60,FJ60			38611-60010-	2	455	
C	8502-8510	FJ60				2		566
		38612A FRAME, WINCH END						
	8008-8502	BJ60,FJ60			38612-60010-	1	455	
C	8502-8510	FJ60				1		566
		38613A BRUSH, WINCH						
	8008-8502	BJ60,FJ60			38613-60010-	4	455	
C	8502-8510	FJ60				4		566
		38613B SPRING (FOR WINCH MOTOR)						
	8008-8502	BJ60,FJ60			28143-46012-	4	455	
C	8502-8510	FJ60				4		566
		38613C BUSH (FOR WINCH MOTOR)						
	8008-8502	BJ60,FJ60			28111-46011-	1	455	
C	8502-8510	FJ60				1		566
		38614 COVER, COMMUTATOR WINCH						
	8008-8502	BJ60,FJ60			38614-60010-	1	455	
C	8502-8510	FJ60				1		566
		38614A RING, O (FOR WINCH MOTOR)						
	8008-8502	BJ60,FJ60	OD=112.8		90099-14023-	1	455	
	8008-8502	BJ60,FJ60			90099-14028-	2	455	
C	8502-8510	FJ60	OD=112.8		90099-14023-	1		566
C	8502-8510	FJ60			90099-14028-	2		566

	PROD.DATE	MODELS	DESCRIPTION	R/P	PART NUMBER	QTY	REV.REF.CODE FROM	REV.REF.CODE UP TO
		38616A DUCT, YOKE WINCH						
	8008-8502	BJ60,FJ60			38616-60010-	1	455	
C	8502-8510	FJ60				1		566
		38617A DUCT, COVER WINCH						
	8008-8502	BJ60,FJ60			38617-60010-	1	45	
C	8502-8510	FJ60				1		566
		38621B COVER, MAGNET SWITCH WINCH						
	8008-8502	BJ60,FJ60			38621-60010-	1	455	
C	8502-8510	FJ60				1		566
		38622 COVER, CONNECTOR WINCH						
	8008-8502	BJ60,FJ60			38622-60010-	1	455	
C	8502-8510	FJ60				1		566
		38623 STOPPER, WINCH						
	8008-8502	BJ60,FJ60			38623-60010-	2	455	
C	8502-8510	FJ60				2		566
		38625 BOLT, STUD WINCH						
	8008-8502	BJ60,FJ60			38625-60010-	1	455	
C	8502-8510	FJ60				1		566
		38626 BUSHING, STEPPED FEMALE WINCH						
	8008-8502	BJ60,FJ60			38626-60010-	1	455	
C	8502-8510	FJ60				1		566
		38627 BUSHING, STEPPED MALE WINCH						
	8008-8502	BJ60,FJ60			38627-60010-	1	455	
C	8502-8510	FJ60				1		566
		38628 GROMET, WINCH						
	8008-8502	BJ60,FJ60			38628-60010-	1	455	
C	8502-8510	FJ60				1		566

GENUINE TOYOTA PARTS

	PROD.DATE	MODELS	DESCRIPTION	R/P	PART NUMBER	QTY	REV.REF.CODE FROM	REV.REF.CODE UP TO
		38629 WIRE, WINCH MOTOR						
	8008-8502	BJ60,FJ60			38629-60010-	1	455	
C	8502-8510	FJ60				1		566
		38640 SWITCH ASSY, WINCH CONTROL						
	8008-8502	BJ60,FJ60	12V		38640-60010-	1	455	
C	8502-8510	FJ60	12V			1		566
		38640A BULB (FOR WINCH CONTROL SWITCH)						
	8008-8502	BJ60,FJ60	12V,1.4W		90981-11024-	2	455	
C	8502-8510	FJ60	12V,1.4W			2		566
		38641 GASKET (FOR WINCH CONTROL SWITCH)						
	8008-8502	BJ60,FJ60			38641-60010-	1	455	
C	8502-8510	FJ60				1		566
		38642 SCREW (FOR WINCH CONTROL SWITCH)						
	8008-8502	BJ60,FJ60			* 38642-60010- (93510-13012-)	8	455	
C	8502-8510	FJ60				8		566
		38659 COVER, WINCH CONTROL SWITCH						
	8008-8502	BJ60,FJ60			38659-60010-	1	455	
C	8502-8510	FJ60				1		566

(8008-)

ILLUST.NO. 10F3

Semi Floating Axle

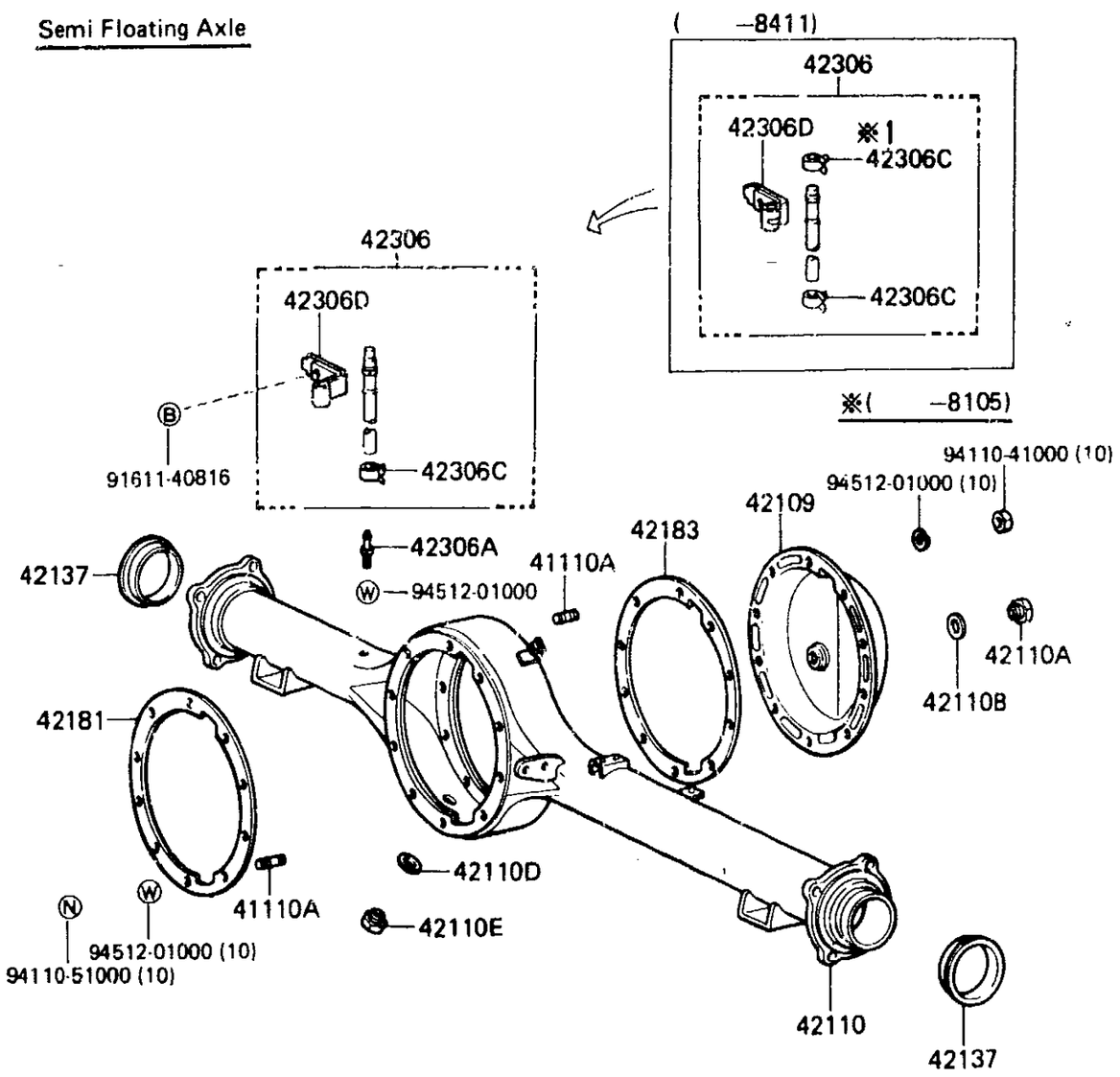

MC 7181-B

(8008-8210); (8608-)HJ60

ILLUST.NO. 10F3

Full Floating Axle

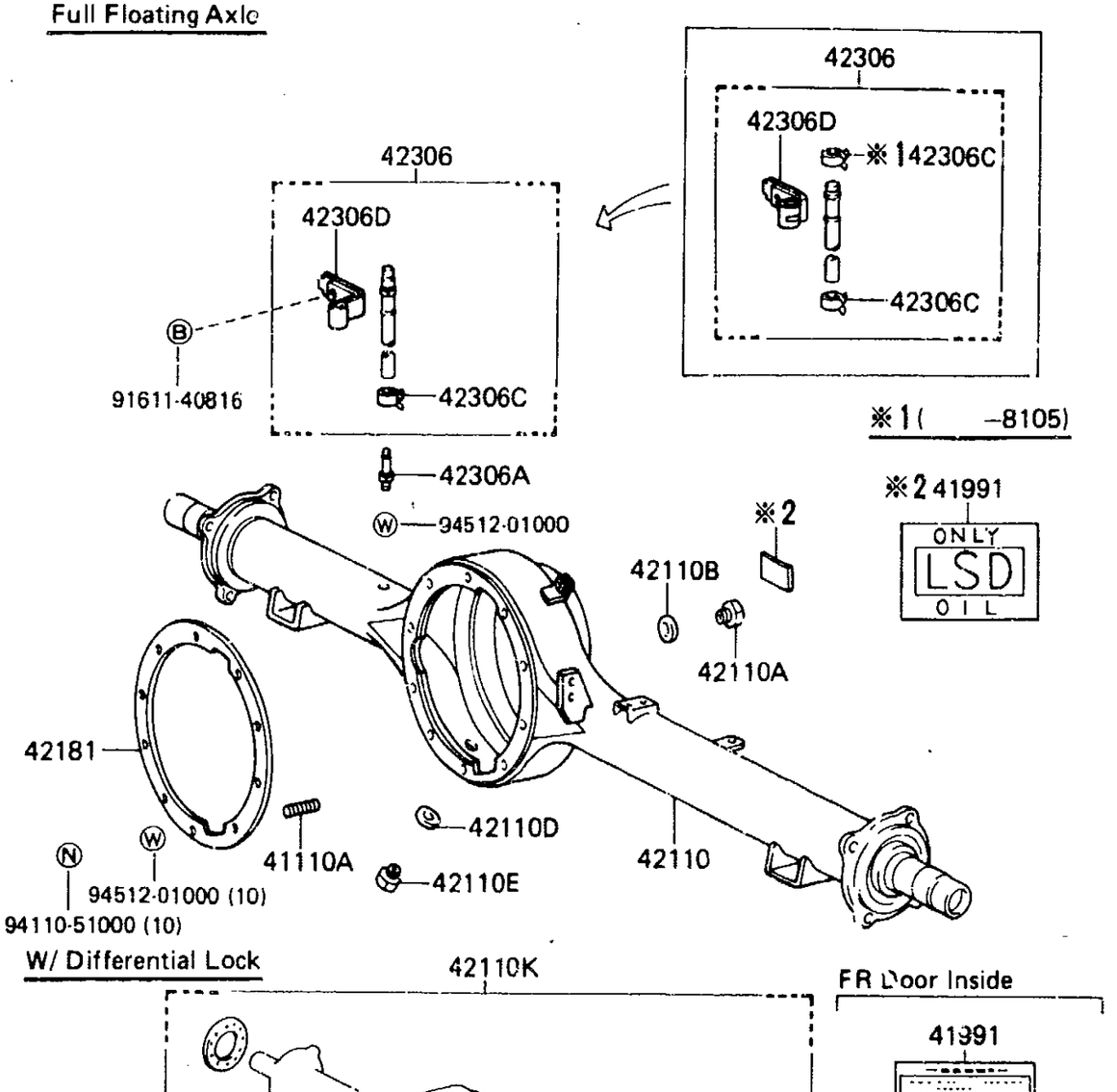

W/ Differential Lock

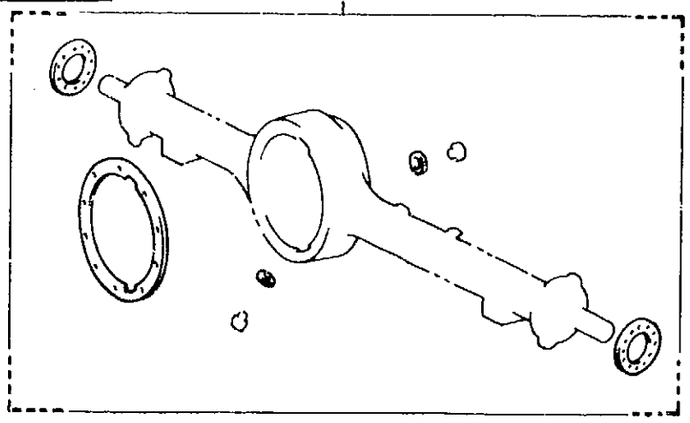

FR Door Inside

MC 8320-B

(8008-8411)BJ60;FJ60; (8411-8504)FJ60

ILLUST•NO• 2OF3

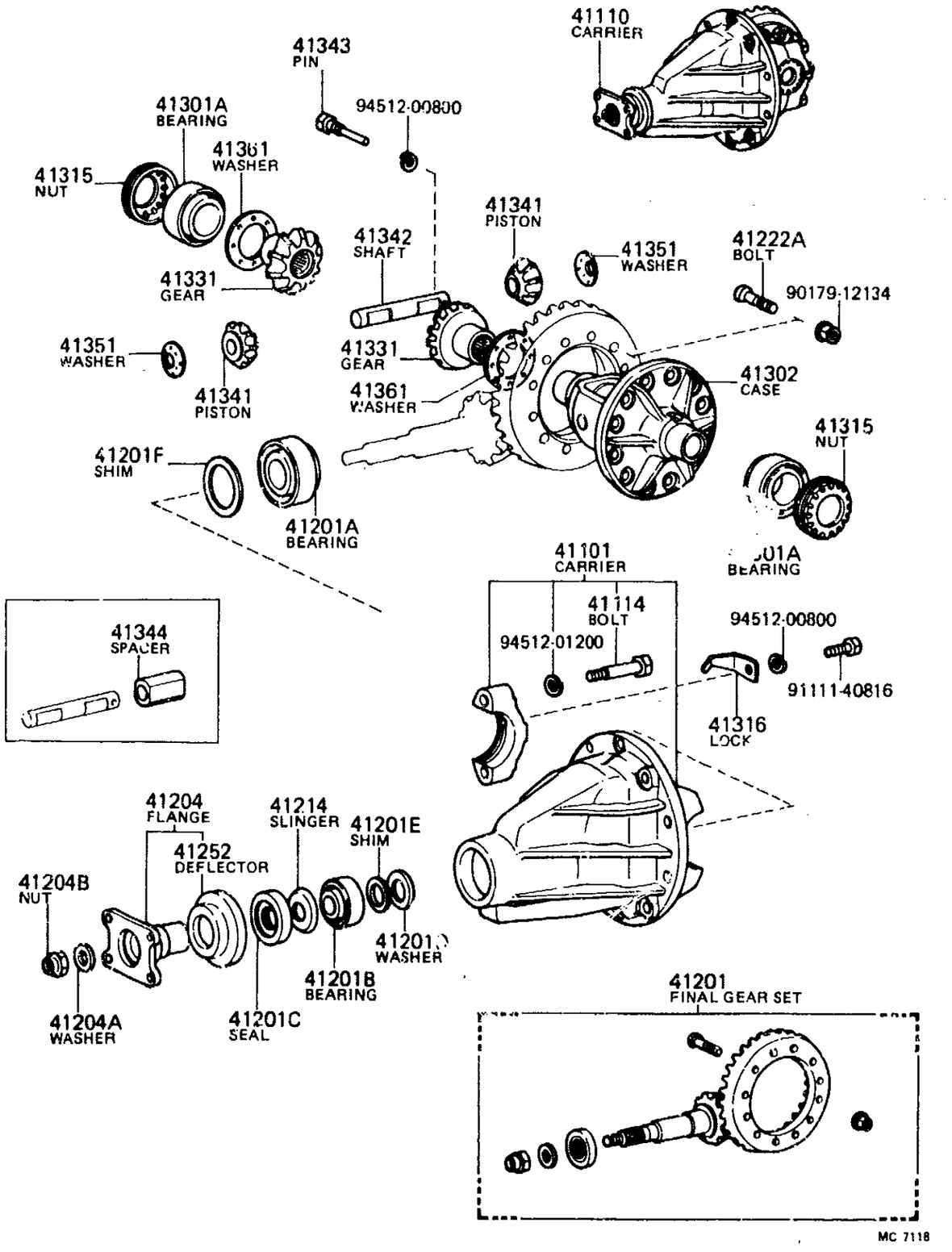

ILLUST•NO• 2OF3

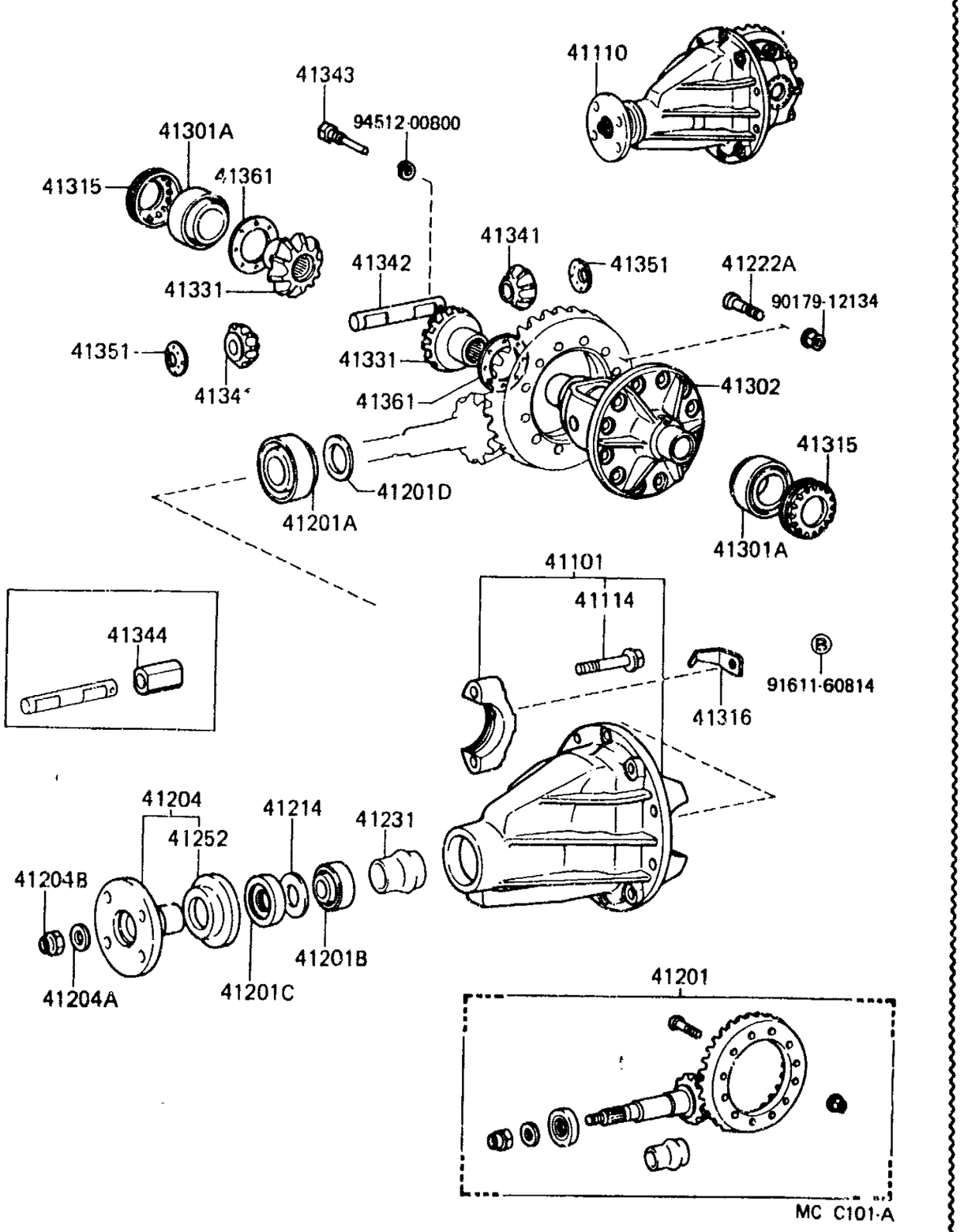

(8112-8210)FJ60

(8608-)

ILLUST.NO. 2OF3

Limited Slip Differential

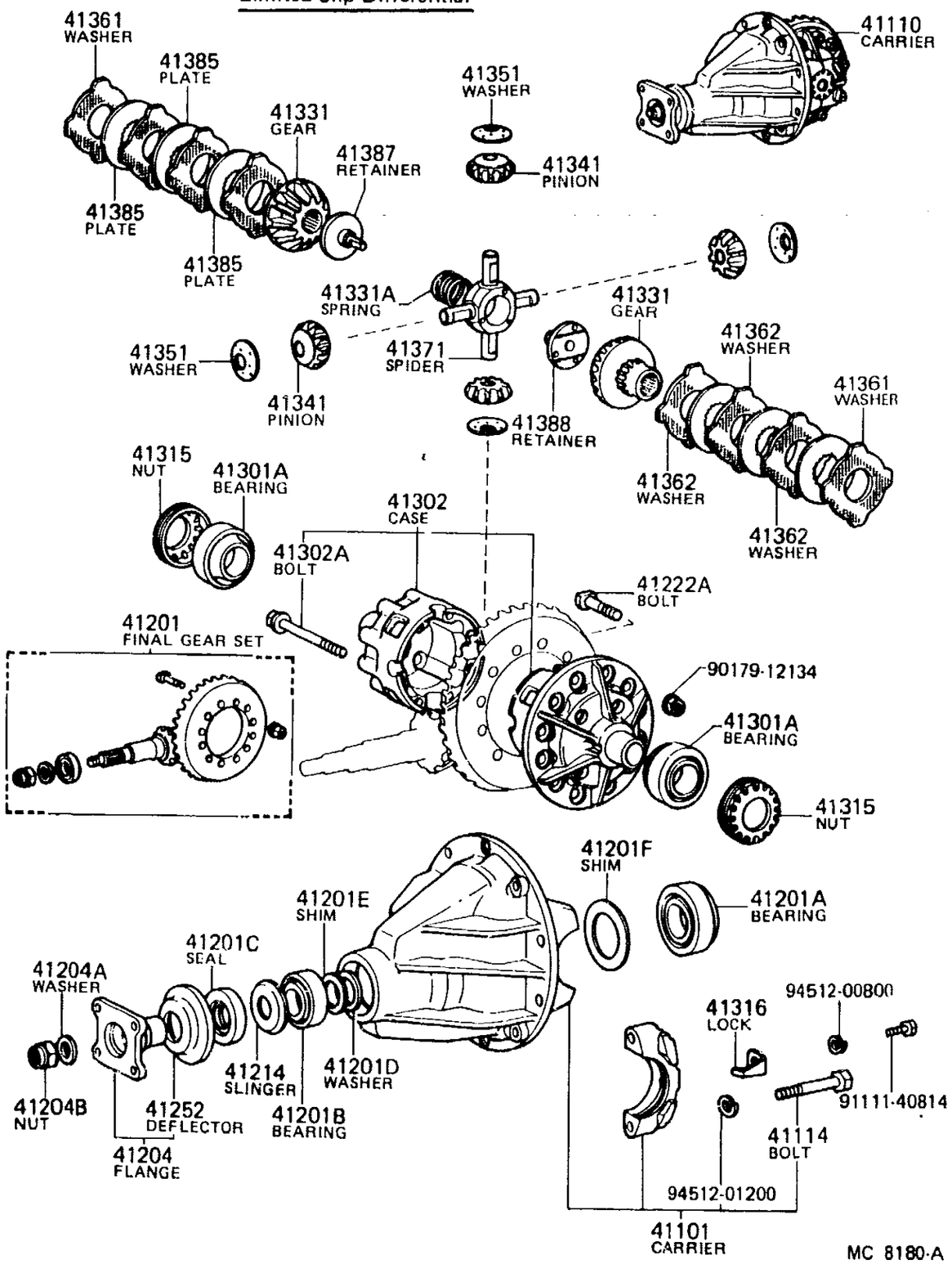

MC 8180-A

ILLUST.NO. 2OF3

W/ Differential Lock

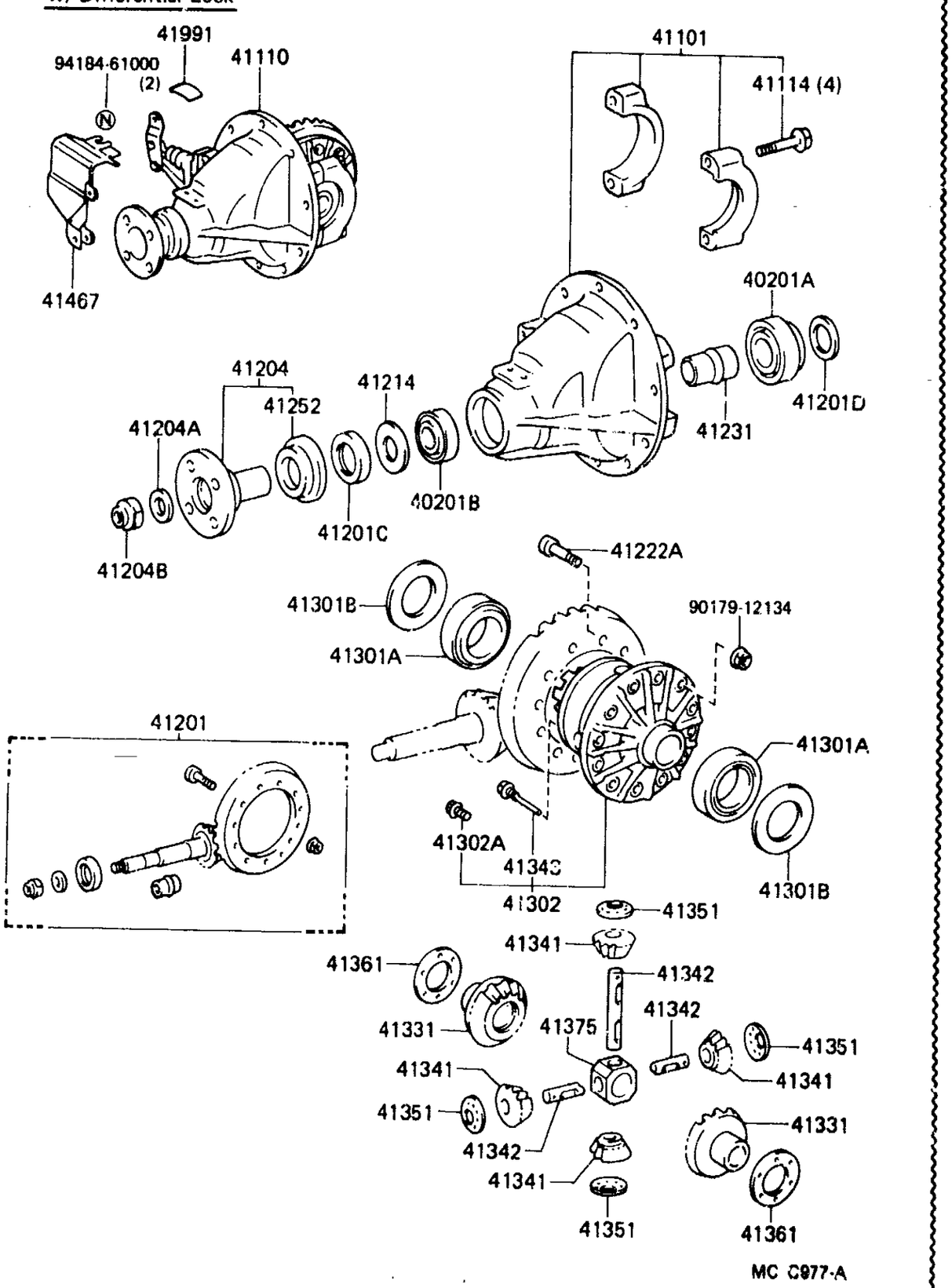

MC C977-A

FIG.41-01 REAR AXLE HOUSING & DIFFERENTIAL

2-J8

(8608-)

ILLUST.NO. 30F3

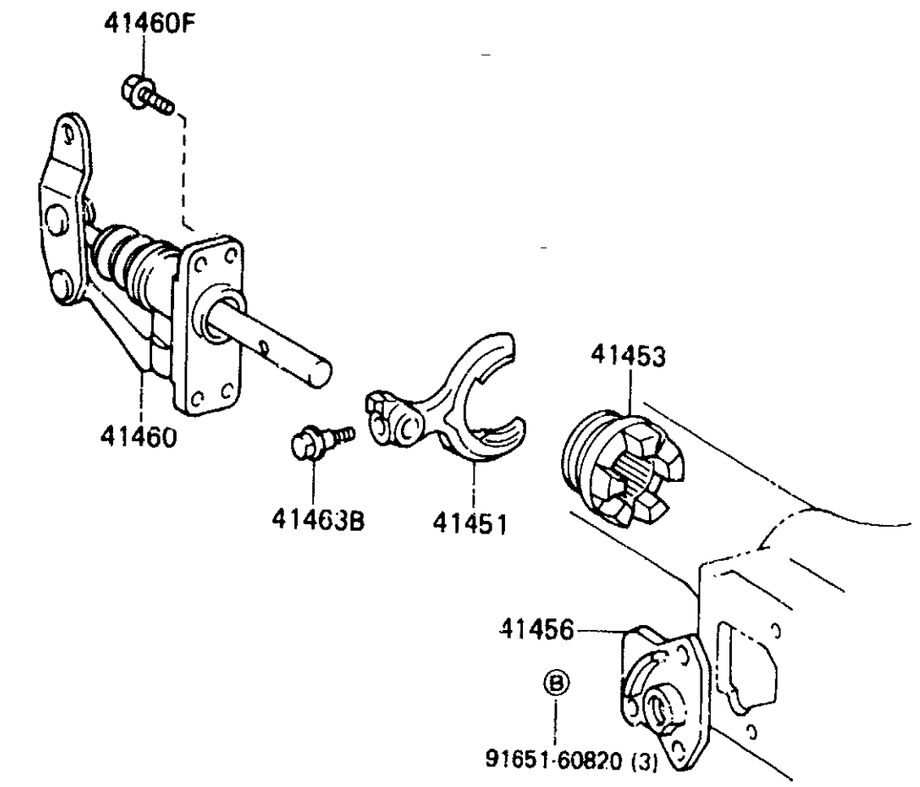

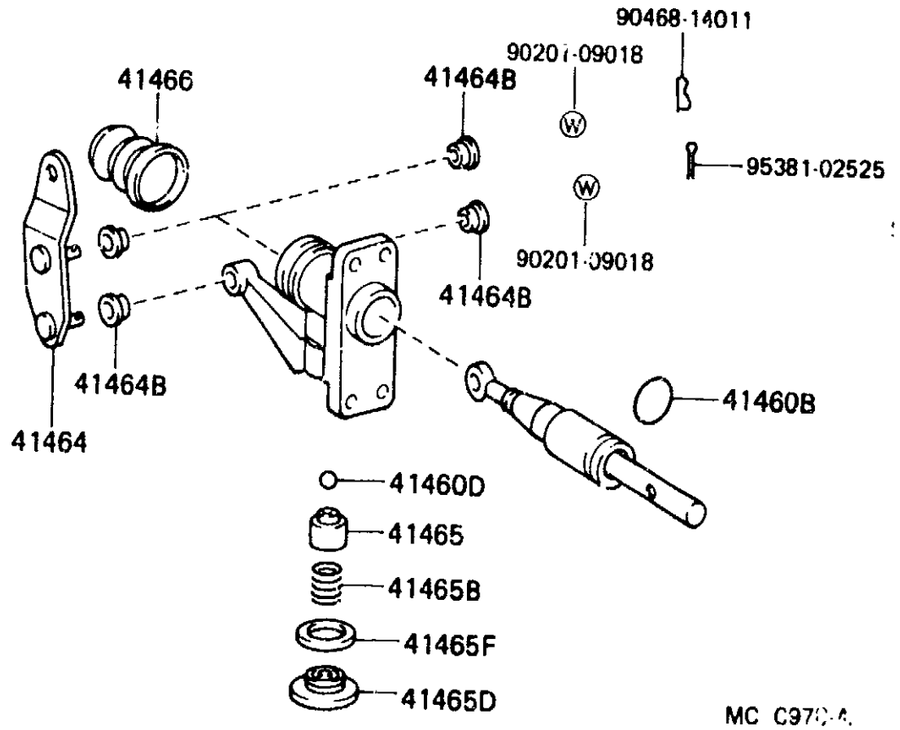

MC C970-A

* FGR = Final Gear Ratio
* AXC = Axle Code (Stated in TRANS/AXLE Column of Name Plate)
* DL = Differential Lock

MR4-13-0236

GENUINE TOYOTA PARTS

	PROD.DATE	MODELS	DESCRIPTION	R/P	PART NUMBER	QTY	REV.REF.CODE FROM	REV.REF.CODE UP TO
	FIG.	41-01 REAR AXLE HOUSING & DIFFERENTIAL						
		41101 CARRIER SUB-ASSY, DIFFERENTIAL, REAR						
	8411-8504	BJ60			41101-60040-	1	515	554
	8008-8411	BJ60,FJ60			# 41101-60021- (41101-60H00-)	1	455	514
	8504-	BJ60,HJ60,FJ60			41101-60040-	1	555	
	8411-8504	FJ60			# 41101-60021- (41101-60H00-)	1	515	554
C	8608-	HJ60	W/DIFFERENTIAL LOCK		41101-60080-	1	601	
		41110 CARRIER ASSY, DIFFERENTIAL, REAR						
	8411-8504	BJ60	*FGR=37:10,*AXC=K052		41110-60100-	1	515	554
	8008-8408	BJ60,FJ60	*FGR=37.10,*AXC=K052		41110-60026-	1	455	
	8408-8411	BJ60,FJ60	*FGR=37:10,*AXC=K052		# 41110-60027- (41110-60028-)	1		514
	8504-	BJ60,HJ60,FJ60,,MTM	*FGR=37:10,*AXC=K052		41110-60100-	1	1101	
	8112-8210	FJ60	*FGR=37:10,*AXC=K052,W/LSD		41110-60061-	1		466
	8411-8504	FJ60	*FGR=37:10,*AXC=K052		41110-60028-	1	515	554
	8510-	HJ60,,ATM	*FGR=37:9,*AXC=K082		41110-60110-	1	567	
C	8608-	HJ60,,ATM	*FGR=37:9,*AXC=K084,W/*DL		41110-60230-	1	601	
C	8608-	HJ60,,MTM	*FGR=37:10,*AXC=K054,W/*DL		41110-60220-	1	601	
		41110A BOLT (FOR REAR DIFFERENTIAL CARRIER SET)						
	8008-8212	BJ60,FJ60	L=37,S=12&16		# 90116-10103- (90116-10074-)	8	455	
	8008-8212	BJ60,FJ60	L=50,S=12&18		90116-10104-	2	455	
	8008-8212	BJ60,FJ60	L=32,S=12&20		90116-10107-	10	455	
	8212-	BJ60,HJ60,FJ60	L=40,S=15&16		90116-10074-	8		

GENUINE TOYOTA PARTS

	PROD.DATE	MODELS	DESCRIPTION	R/P	PART NUMBER	QTY	REV.REF.CODE FROM	REV.REF.CODE UP TO
		41110A BOLT (FOR REAR DIFFERENTIAL CARRIER SET) CONTINUED						
	8212-	BJ60,HJ60,FJ60	L=53,S=15&18		90116-10075-	2		
	8212-	BJ60,HJ60,FJ60	L=32,S=12&20		90116-10076-	10		
C	8608-	HJ60	L=79,W/DIFFERENTIAL LOCK		90116-10124-	2	601	
		41114 BOLT, REAR DIFFERENTIAL BEARING CAP						
	8008-8411	BJ60,FJ60			41114-35010-	4	455	514
	8411-	BJ60,HJ60,FJ60			90105-12053-	4	515	
C	8608-	HJ60	W/DIFFERENTIAL LOCK		41114-60010-	4	601	
		41201 FINAL GEAR KIT, DIFFERENTIAL, REAR						
	8411-8504	BJ60	N=37:10		# 41201-69155- (41201-69156-)	1	515	554
	8008-8411	BJ60,FJ60	N=37:10		# 41201-69095- (41201-69156-)	1	455	514
	8504-	BJ60,HJ60,FJ60,,MTM	N=37:10		41201-69156-	1	555	
	8411-8504	FJ60	N=37:10			1	515	554
	8510-	HJ60,,ATM	N=37:9		41201-69166-	1	567	
		41201A BEARING, TAPERED ROLLER (FOR REAR DRIVE PINION REAR)						
	8008-8101	BJ60,FJ60			# 97619-30308- (90366-40004-)	1	455	
	8101-	BJ60,HJ60,FJ60			90366-40004-	1		
		41201B BEARING, TAPERED ROLLER (FOR REAR DRIVE PINION FRONT)						
	8008-8101	BJ60,FJ60			97619-30306-	1	455	
	8101-	BJ60,HJ60,FJ60			90366-30011-	1		
		41201C SEAL, OIL (FOR REAR DIFFERENTIAL CARRIER)						
	8008-	BJ60,HJ60,FJ60			90311-38134-	1	455	
		41201D WASHER, PLATE (FOR REAR DIFFERENTIAL DRIVE PINION)						
	8411-8504	BJ60	T=1.05		90201-40551-	1	515	554
	8411-8504	BJ60	T=1.10		90201-40552-	1	515	554

PROD.DATE	MODELS	DESCRIPTION	R/P	PART NUMBER	QTY	REV.REF.CODE FROM	REV.REF.CODE UP TO
	41201D WASHER, PLATE (FOR REAR DIFFERENTIAL DRIVE PINION) CONTINUED						
8411-8504	BJ60	T=1.15		90201-40553-	1	515	554
8411-8504	BJ60	T=1.20		90201-40554-	1	515	554
8411-8504	BJ60	T=1.25		90201-40555-	1	515	554
8411-8504	BJ60	T=1.30		90201-40556-	1	515	554
8411-8504	BJ60	T=1.35		90201-40557-	1	515	554
8411-8504	BJ60	T=1.40		90201-40558-	1	515	554
8411-8504	BJ60	T=1.45		90201-40559-	1	515	554
8411-8504	BJ60	T=1.50		90201-40560-	1	515	554
8411-8504	BJ60	T=1.55		90201-40561-	1	515	554
8008-8411	BJ60,FJ60	T=2.74-2.76		90560-30184-	1	455	514
8008-8411	BJ60,FJ60	T=2.77-2.79		90560-30185-	1	455	514
8008-8411	BJ60,FJ60	T=2.80-2.82		90560-30186-	1	455	514
8008-8411	BJ60,FJ60	T=2.83-2.85		90560-30187-	1	455	514
8008-8411	BJ60,FJ60	T=2.86-2.88		90560-30188-	1	455	514
8008-8411	BJ60,FJ60	T=2.89-2.91		90560-30190-	1	455	514
8008-8411	BJ60,FJ60	T=2.92-2.94		90560-30191-	1	455	514
8008-8411	BJ60,FJ60	T=2.95-2.97		90560-30192-	1	455	514
8008-8411	BJ60,FJ60	T=2.98-3.00		90560-30199-	1	455	514
8504-	BJ60,HJ60,FJ60	T=1.05		90201-40551-	1	555	
8504-	BJ60,HJ60,FJ60	T=1.10		90201-40552-	1	555	
8504-	BJ60,HJ60,FJ60	T=1.15		90201-40553-	1	555	
8504-	BJ60,HJ60,FJ60	T=1.20		90201-40554-	1	555	
8504-	BJ60,HJ60,FJ60	T=1.25		90201-40555-	1	555	
8504-	BJ60,HJ60,FJ60	T=1.30		90201-40556-	1	555	
8504-	BJ60,HJ60,FJ60	T=1.35		90201-40557-	1	555	
8504-	BJ60,HJ60,FJ60	T=1.40		90201-40558-	1	555	
8504-	BJ60,HJ60,FJ60	T=1.45		90201-40559-	1	555	

GENUINE TOYOTA PARTS

PROD.DATE	MODELS	DESCRIPTION	R/P	PART NUMBER	QTY	REV.REF.CODE FROM	REV.REF.CODE UP TO
	41201D WASHER, PLATE (FOR REAR DIFFERENTIAL DRIVE PIN CONTINUED ION)						
8504-	BJ60,HJ60,FJ60	T=1.50		90201-40560-	1	555	
8504-	BJ60,HJ60,FJ60	T=1.55		90201-40561-	1	555	
8411-8504	FJ60	T=2.74-2.76		90560-30184-	1	515	554
8411-8504	FJ60	T=2.77-2.79		90560-30185-	1	515	554
8411-8504	FJ60	T=2.80-2.82		90560-30186-	1	515	554
8411-8504	FJ60	T=2.83-2.85		90560-30187-	1	515	554
8411-8504	FJ60	T=2.86-2.88		90560-30188-	1	515	554
8411-8504	FJ60	T=2.89-2.91		90560-30190-	1	515	554
8411-8504	FJ60	T=2.92-2.94		90560-30191-	1	515	554
8411-8504	FJ60	T=2.95-2.97		90560-30192-	1	515	554
8411-8504	FJ60	T=2.98-3.00		90560-30199-	1	515	554
	41201E SHIM (FOR DRIVE PINION SPACER FRONT ADJUST)						
8008-8411	BJ60,FJ60			90564-30035-	4	455	514
8411-8504	FJ60				4	515	554
	41201F SHIM (FOR DRIVE PINION SPACER REAR ADJUST)						
8008-8411	BJ60,FJ60	T=0.25		90564-68001-	2	455	514
8008-8411	BJ60,FJ60	T=0.30		90564-68002-	2	455	514
8008-8411	BJ60,FJ60	T=0.35		90564-68003-	2	455	514
8008-8411	BJ60,FJ60	T=0.40		90564-68004-	2	455	514
8008-8411	BJ60,FJ60	T=0.45		90564-68005-	2	455	514
8411-8504	FJ60	T=0.25		90564-68001-	2	515	554
8411-8504	FJ60	T=0.30		90564-68002-	2	515	554
8411-8504	FJ60	T=0.35		90564-68003-	2	515	554
8411-8504	FJ60	T=0.40		90564-68004-	2	515	554
8411-8504	FJ60	T=0.45		90564-68005-	2	515	554

PROD.DATE	MODELS	DESCRIPTION	R/P	PART NUMBER	QTY	REV.REF.CODE FROM	REV.REF.CODE UP TO
	41204 FLANGE SUB-ASSY, DRIVE PINION COMPANION, REAR						
8008-8408	BJ60,FJ60			41204-60010-	1	455	
8408-	BJ60,HJ60,FJ60			41204-60030-	1		
	41204A WASHER, PLATE (FOR DRIVE PINION)						
8411-8504	BJ60			90201-22007-	1	515	554
8008-8411	BJ60,FJ60			90201-20005-	1	455	514
8504-	BJ60,HJ60,FJ60			90201-22007-	1	1101	
8411-8504	FJ60			90201-20005-	1	515	554
	41204B NUT (FOR DRIVE PINION)						
8411-8504	BJ60			90179-22011-	1	515	554
8008-8411	BJ60,FJ60			90179-20001-	1	455	514
8504-	BJ60,HJ60,FJ60			90179-22011-	1	555	
8411-8504	FJ60			90179-20001-	1	515	554
	41214 SLINGER, REAR DIFFERENTIAL DRIVE PINION OIL						
8411-8504	BJ60			41214-26010-	1	515	554
8008-8210	BJ60,FJ60			* 41214-30010- (41214-40010-)	1	455	
8210-8411	BJ60,FJ60			41214-40010-	1		514
8504-	BJ60,HJ60,FJ60			41214-26010-	1	555	
8411-8504	FJ60			41214-40010-	1	515	554
	41222A BOLT (FOR REAR RING GEAR SET)						
8008-	BJ60,HJ60,FJ60			41226-35010-	12	455	
	41231 SPACER, REAR DIFFERENTIAL DRIVE PINION BEARING						
8411-	BJ60,HJ60,FJ60			41231-60020-	1	515	
	41252 DEFLECTOR, DUST (FOR REAR DIFFERENTIAL)						
8008-8408	BJ60,FJ60			37341-30010-	1	455	
8408-	BJ60,HJ60,FJ60			41252-35010-	1		
	41301A BEARING, TAPERED ROLLER (FOR REAR DIFFERENTIAL CASE)						
8008-	BJ60,HJ60, J60			90368-45066-	2	455	

	PROD.DATE	MODELS	DESCRIPTION	R/P	PART NUMBER	QTY	REV.REF.CODE FROM	REV.REF.CODE UP TO
		41301A BEARING, TAPERED ROLLER (FOR REAR DIFFERENTIAL CASE) CONTINUED						
C	8608-	HJ60	W/DIFFERENTIAL LOCK		90366-60002-	2	601	
		41301B WASHER (FOR REAR DIFFERENTIAL TAPERED ROLLER BEARING)						
C	8608-	HJ60	MARK 01		90201-79001-	2	601	
C	8608-	HJ60	MARK 02		90201-79002-	2	601	
C	8608-	HJ60	MARK 03		90201-79003-	2	601	
C	8608-	HJ60	MARK 04		90201-79004-	2	601	
C	8608-	HJ60	MARK 05		90201-79005-	2	601	
C	8608-	HJ60	MARK 06		90201-79006-	2	601	
C	8608-	HJ60	MARK 07		90201-79007-	2	601	
C	8608-	HJ60	MARK 08		90201-79008-	2	601	
C	8608-	HJ60	MARK 09		90201-79009-	2	601	
C	8608-	HJ60	MARK 10		90201-79010-	2	601	
C	8608-	HJ60	MARK 11		90201-79011-	2	601	
C	8608-	HJ60	MARK 12		90201-79012-	2	601	
C	8608-	HJ60	MARK 13		90201-79013-	2	601	
C	8608-	HJ60	MARK 14		90201-79014-	2	601	
C	8608-	HJ60	MARK 15		90201-79015-	2	601	
C	8608-	HJ60	MARK 16		90201-79016-	2	601	
C	8608-	HJ60	MARK 17		90201-79017-	2	601	
C	8608-	HJ60	MARK 18		90201-79018-	2	601	
C	8608-	HJ60	MARK 19		90201-79019-	2	601	
C	8608-	HJ60	MARK 20		90201-79020-	2	601	
C	8608-	HJ60	MARK 21		90201-79021-	2	601	
C	8608-	HJ60	MARK 22		90201-79022-	2	601	
C	8608-	HJ60	MARK 23		90201-79023-	2	601	
		41302 CASE SUB-ASSY, DEFFERENTIAL						
	8008-	BJ60,HJ60,FJ60			41311-36010-	1	455	
	8112-8210	FJ60	W/LSD		41301-60011-	1		466
C	8608-	HJ60	W/DIFFERENTIAL LOCK		41301-60020-	1	601	
		41302A BOLT (FOR DIFFERENTIAL CASE)						
	8112-8210	FJ60			90105-10021-	8		466
C	8608-	HJ60	W/DIFFERENTIAL LOCK		90109-10091-	5	601	
		41315 NUT, REAR DIFFERENTIAL BEARING ADJUSTING						
	8008-	BJ60,HJ60,FJ60			41315-30010-	2	455	
		41316 LOCK, REAR DIFFERENTIAL BEARING ADJUSTING NUT						
	8008-	BJ60,HJ60,FJ60			41316-30010-	2	455	
		41331 GEAR, REAR DIFFERENTIAL SIDE						
	8008-	BJ60,HJ60,FJ60			41331-35020-	2	455	
	8112-8210	FJ60	W/LSD		41331-60010-	2		466
C	8608-	HJ60	W/DIFFERENTIAL LOCK		41331-60020-	2	601	
		41331A SPRING,COMPRESSION						
	8112-8210	FJ60	CW=3.5,WD=8.5		90501-85001-	1		466
		41341 PINION, REAP DIFFERENTIAL						
	8008-	BJ60,HJ60,FJ60			41341-55012-	2	455	
	8112-8210	FJ60	W/LSD		41341-60010-	4		466
		41342 SHAFT, REAR DIFFERENTIAL PINION						
	8008-	BJ60,HJ60,FJ60			41342-55010-	1	455	
C	8608-	HJ60	L=136.0,W/DIFFERENTIAL LOCK		41342-60010-	1	601	
C	8608-	HJ60	L=60.5,W/DIFFERENTIAL LOCK		41342-60020-	2	601	
		41343 PIN, DIFFERENTIAL PINION SHAFT						
	8008-	BJ60,HJ60,FJ60			41343-55010-	1	455	
C	8608-	HJ60	W/DIFFERENTIAL LOCK		41343-60010-	3	601	

PROD.DATE	MODELS	DESCRIPTION	R/P	PART NUMBER	QTY	REV.REF.CODE FROM	REV.REF.CODE UP TO
	41344 SPACER, DIFFERENTIAL PINION SHAFT						
8008-	BJ60,HJ60,FJ60	H=29.8		41344-35010-	1	455	
8008-	BJ60,HJ60,FJ60	H=30.2		41345-35010-	1	455	
8008-	BJ60,HJ60,FJ60	H=30.6		41346-35010-	1	455	
8008-	BJ60,HJ60,FJ60	H=29.0		41347-35010-	1	455	
8008-	BJ60,HJ60,FJ60	H=29.4		41348-35010-	1	455	
	41351 WASHER, REAR DIFFERENTIAL PINION THRUST						
8008-	BJ60,HJ60,FJ60			41351-35011-	2	455	
8112-8210	FJ60	W/LSD		41351-60010-	4		466
	41361 WASHER, REAR DIFFERENTIAL SIDE GEAR THRUST NO.1						
8112-8210	BJ60	MARK A,W/LSD		41361-60061-	1		466
8112-8210	BJ60	MARK B,W/LSD		41361-60071-	1		466
8112-8210	BJ60	MARK C,W/LSD		41361-60081-	1		466
8112-8210	BJ60	MARK D,W/LSD		41361-60091-	1		466
8112-8210	BJ60	MARK E,W/LSD		41361-60101-	1		466
8112-8210	BJ60	MARK F,W/LSD		41361-60111-	1		466
8112-8210	BJ60	MARK G,W/LSD		41361-60121-	1		466
8112-8210	BJ60	MARK H,W/LSD		41361-60131-	1		466
8112-8210	BJ60	MARK J,W/LSD		41361-60141-	1		466
8112-8210	BJ60	MARK K,W/LSD		41361-60151-	1		466
8112-8210	BJ60	MARK L,W/LSD		41361-60161-	1		466
8112-8210	BJ60	MARK M,W/LSD		41361-60171-	1		466
8112-8210	BJ60	MARK N,W/LSD		41361-60181-	1		466
8008-	BJ60,HJ60,FJ60	T=1.55-1.65		41361-60010-	2	455	

PROD.DATE	MODELS	DESCRIPTION	R/P	PART NUMBER	QTY	REV.REF.CODE FROM	REV.REF.CODE UP TO
	41361 WASHER, REAR DIFFERENTIAL SIDE GEAR THRUST NO.1 CONTINUED						
8008-	BJ60,HJ60,FJ60	T=1.70-1.80		41361-60020-	2	455	
8008-	BJ60,HJ60,FJ60	T=1.85-1.95		41361-60030-	2	455	
8008-	BJ60,HJ60,FJ60	T=2.00-2.10		41361-60040-	2	455	
	41362 WASHER, DIFFERENTIAL SIDE GEAR THRUST, NO.2						
8112-8210	FJ60			41361-60051-	6		466
	41371 SPIDER, DIFFERENTIAL						
8112-8210	FJ60			41306-60010-	1		466
	41375 HOLDER, PINION SHAFT						
8608-	HJ60	W/DIFFERENTIAL LOCK	C	41375-60010-	1	601	
	41385 PLATE, CLUTCH						
8112-8210	FJ60			41385-60011-	6		466
	41387 RETAINER, SPRING, RH						
8112-8210	FJ60			41387-60010-	1		466
	41388 RETAINER, SPRING, LH						
8112-8210	FJ60			41388-60010-	1		466
	41451 FORK, REAR DIFFERENTIAL LOCK SHIFT						
8608-	HJ60		C	41451-60010-	1	601	
	41453 SLEEVE, REAR DIFFERENTIAL LOCK						
8608-	HJ60		C	41453-60010-	1	601	
	41456 COVER, REAR DIFFERENTIAL LOCK						
8608-	HJ60		C	41456-60010-	1	601	
	41460 CYLINDER ASSY, REAR DIFFERENTIAL LOCK						
8608-	HJ60		C	41460-60010-	1	601	

GENUINE TOYOTA PARTS

	PROD.DATE	MODELS	DESCRIPTION	R/P	PART NUMBER	QTY	REV.REF.CODE FROM	REV.REF.CODE UP TO
		41460B RING O (FOR REAR DIFFERENTIAL LOCK CYLINDER)						
C	8608-	HJ60			96711-24023-	1	601	
		41460D BALL (FOR REAR DIFFERENTIAL LOCK CYLINDER)						
C	8608-	HJ60			90360-10003-	1	601	
		41460F BOLT (FOR REAR DIFFERENTIAL LOCK CYLINDER SET)						
C	8608-	HJ60			90105-08114-	1	601	
		41463B BOLT (FOR REAR DIFFERENTIAL LOCK SHIFT FORK SHAFT SET)						
C	8608-	HJ60			90105-06052-	1	601	
		41464 LEVER, REAR DIFFERENTIAL LOCK CYLINDER						
C	8608-	HJ60			41464-60010-	1	601	
		41464B BUSH (FOR REAR DIFFERENTIAL LOCK CYLINDER LVER)						
C	8608-	HJ60			90386-09009-	4	601	
		41465 RETAINER, REAR DIFFERENTIAL LOCK SPRING						
C	8608-	HJ60			41465-60010-	1	601	
		41465B SPRING, COMPRESSION (FOR REAR DIFFERENTIAL LOCK RETAINER)						
C	8608-	HJ60			90501-20083-	1	601	
		41465D PLUG (FOR REAR DIFFERENTIAL LOCK CYLINDER)						
C	8608-	HJ60			90341-26001-	1	601	
		41465F GASKET (FOR REAR DIFFERENTIAL LOCK CYLINDER)						
C	8608-	HJ60			90430-26002-	1	601	
		41466 BOOT, REAR DIFFERENTIAL LOCK CYLINDER						
C	8608-	HJ60			41466-60010-	1	601	
		41991 PLATE, CAUTION						
	8112-8210	FJ60			41991-60010-	1		466
		42109 COVER SUB-ASSY, REAR AXLE HOUSING						
	8008-	BJ60,HJ60,FJ60			42109-60050-	1	455	

	PROD.DATE	MODELS	DESCRIPTION	R/P	PART NUMBER	QTY	REV.REF.CODE FROM	REV.REF.CODE UP TO
		42110 HOUSING ASSY, REAR AXLE						
	8411-8504	BJ60			42110-60192-	1	515	554
	8110-8210	BJ60,FJ60			42110-60190-	1	459	466
	8210-8411	BJ60,FJ60			42110-60191-	1	467	514
	8008-8110	BJ60,FJ60..WGV			42110-60170-	1	455	458
	8008-8110	BJ60,FJ60..WGV	FULL FLOATING		42110-60210-	1	455	458
C	8504-8608	BJ60,HJ60,FJ60			42110-60192-	1	555	600
	8411-8504	FJ60			42110-60191-	1	515	554
	8008-8110	FJ60..WGG			42110-60190-	1	455	458
	8008-8210	FJ60..WGG	FULL FLOATING		42110-60230-	1	455	466
C	8608-	HJ60	W/DIFFERENTIAL LOCK		42110-60301-	1	601	
C	8608-	HJ60,FJ60			42110-60193-	1	601	
		42110A PLUG (FOR REAR AXLE HOUSING FILLER)						
	8411-8504	BJ60			90341-18006-	1	515	554
	8008-8411	BJ60,FJ60			90341-18049-	1	455	514
	8504-	BJ60,HJ60,FJ60			90341-18006-	1	555	
	8411-8504	FJ60			90341-18049-	1	515	554
		42110B GASKET (FOR REAR AXLE HOUSING FILLER PLUG)						
	8008-	BJ60,HJ60,FJ60			12157-10010-	1	455	
		42110D GASKET, DRAIN PLUG (FOR REAR AXLE HOUSING)						
	8008-	BJ60,HJ60,FJ60			12157-10010-	1	455	
		42110E PLUG SUB-ASSY, DRAIN (FOR REAR AXLE HOUSING)						
	8008-	BJ60,HJ60,FJ60			90341-18057-	1	455	
		42110K GASKET KIT, DIFFERENTIAL CARRIER						
C	8608-	HJ60	W/DIFFERENTIAL LOCK		04412-60010-	1	601	
		42137 COLLAR, REAR AXLE HOUSING SIDE						
	8008-	BJ60,HJ60,FJ60			42137-55010-	2	455	

GENUINE TOYOTA PARTS

	PROD.DATE	MODELS	DESCRIPTION	R/P	PART NUMBER	QTY	REV.REF.CODE FROM	REV.REF.CODE UP TO
		42181 GASKET, REAR DIFFERENTIAL CARRIER						
	8008-	BJ60,HJ60,FJ60			42181-36010-	1	455	
C	8608-	HJ60	W/DIFFERENTIAL LOCK		42181-60030-	1	601	
		42183 GASKET, REAR AXLE HOUSING COVER						
	8008-	BJ60,HJ60,FJ60			42183-35010-	1	455	
		42306 HOSE SUB-ASSY, REAR AXLE BREATHER						
	8008-8411	BJ60,FJ60			# 42306-60050- (42306-60051-)	1	455	514
	8411-	BJ60,HJ60,FJ60			42306-60051-	1	515	
		42306A UNION (FOR REAR AXLE BREATHER HOUSE)						
	8008-	BJ60,HJ60,FJ60			90404-10018-	1	455	
		42306C CLIP, HOSE (FOR REAR AXLE BREATHER HOSE)						
	8008-	BJ60,HJ60,FJ60			96132-30600-	1	455	
		42306D CLAMP (FOR REAR AXLE BRATHER HOSE)						
	8008-	BJ60,HJ60,FJ60			90461-10558-	1	455	

PROD.DATE	MODELS	DESCRIPTION	R/P	PART NUMBER	QTY	REV.REF.CODE FROM	REV.REF.CODE UP TO

(8008-)

(8008-8210); (8608-)HJ60

Semi Floating Axle

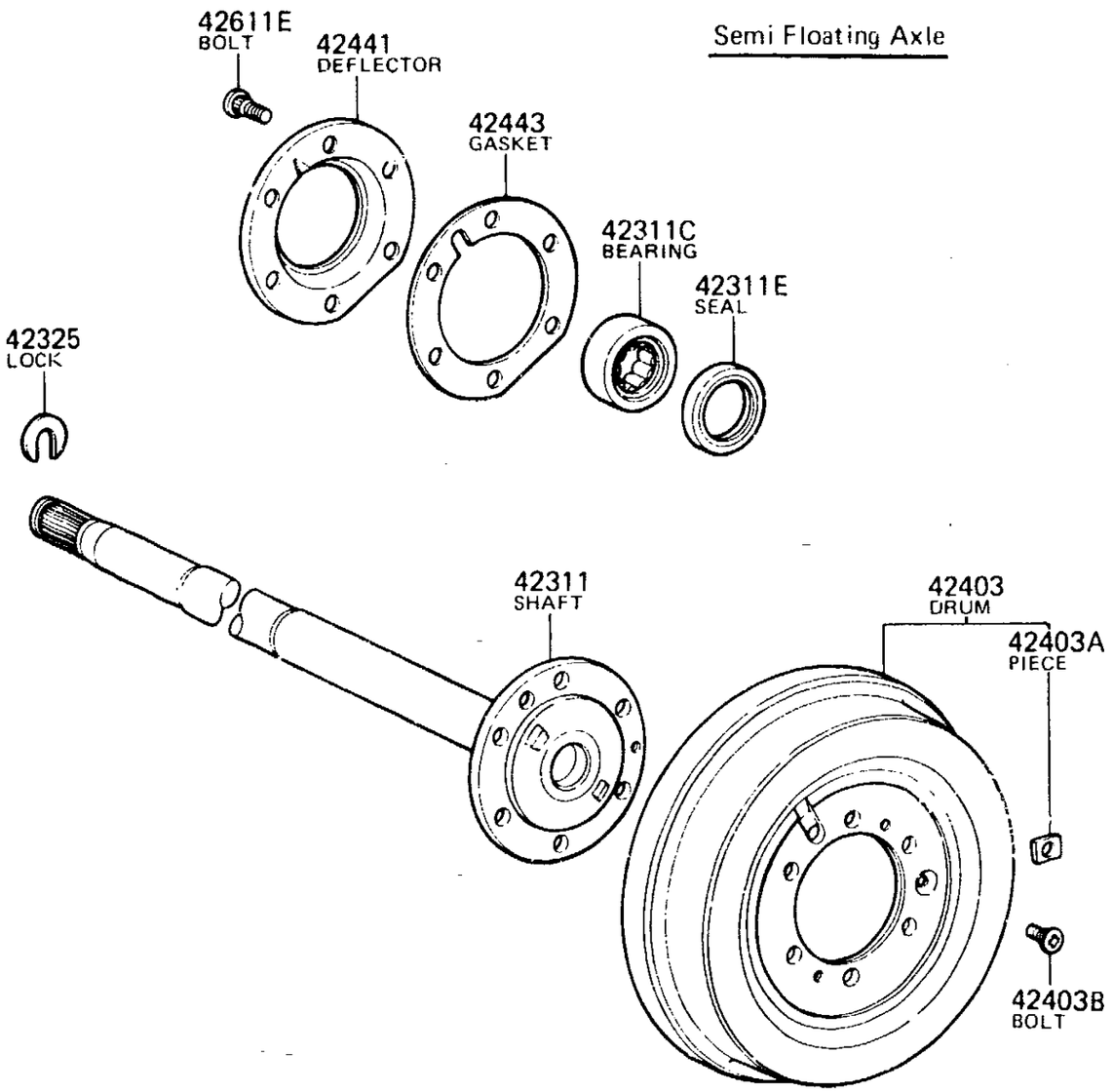

MC 7119

Full Floating Axle

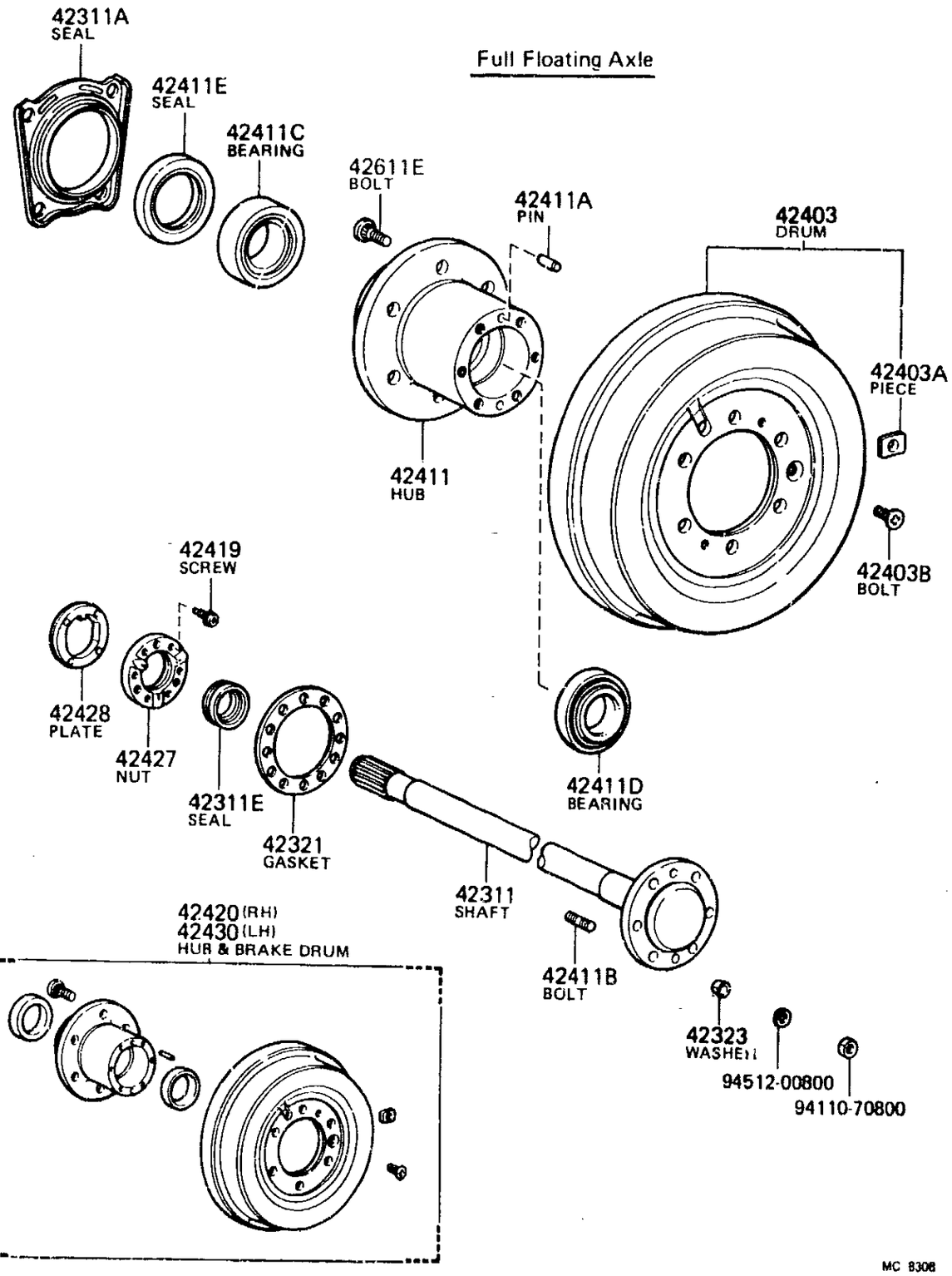

MC 8308

	PROD.DATE	MODELS	DESCRIPTION	R/P	PART NUMBER	QTY	REV.REF.CODE FROM	REV.REF.CODE UP TO
	FIG. 41-02 REAR AXLE SHAFT & HUB							
		42311 SHAFT, REAR AXLE						
	8008-8110	BJ60,FJ60	RH,FULL FLOATING		42311-60052-	1	455	458
	8008-8110	BJ60,FJ60	LH,FULL FLOATING		42312-60060-	1	455	458
	8008-	BJ60,HJ60,FJ60	RH,SEMI FLOATING		42311-60060-	1	455	
	8008-	BJ60,HJ60,FJ60	LH,SEMI FLOATING		42312-60050-	1	455	
	8110-8210	FJ60	RH,FULL FLOATING		42311-60052-	1	459	466
	8110-8210	FJ60	LH,FULL FLOATING		42312-60060-	1	459	466
C	8608-	HJ60	LH,FULL FLOATING,W/*DL		42311-60060-	1	601	
C	8608-	HJ60	RH,W/DIFFERENTIAL LOCK		42311-60080-	1	601	
		42311A SEAL, OIL	(FOR REAR AXLE SHAFT)					
	8008-8110	BJ60,FJ60			90313-93001-	2	455	458
	8110-8210	FJ60				2	459	466
C	8608-	HJ60	W/DIFFERENTIAL LOCK			2	601	
		42311C BEARING,	(FOR REAR AXLE SHAFT)					
	8008-	BJ60,HJ60,FJ60			90365-47013-	2	455	
		42311E SEAL, OIL	(FOR REAR AXLE SHAFT OUTER)					
	8008-8110	BJ60,FJ60	FULL FLOATING		90310-35001-	2	455	458
	8008-	BJ60,HJ60,FJ60	SEMI FLOATING		90311-47001-	2	455	
	8110-8210	FJ60	FULL FLOATING		90310-35001-	2	459	466
C	8608-	HJ60	FULL FLOATING,W/*DL			2	601	
		42321 GASKET, REAR AXLE SHAFT						
	8008-8110	BJ60,FJ60			43422-60010-	2	455	458
	8110-8210	FJ60			43422-60010-	2	459	466
C	8608-	HJ60	W/DIFFERENTIAL LOCK		43422-60020-	2	601	
		42323 WASHER, CONE (FOR REAR AXLE SHAFT)						
	8008-8110	BJ60,FJ60			42323-60010-	12	455	458
	8110-8210	FJ60				12	459	466
C	8608-	HJ60	W/DIFFERENTIAL LOCK			2	601	
		42325 LOCK, REAR AXLE SHAFT						
	8008-	BJ60,HJ60,FJ60			42325-55010-	2	455	
		42403 DRUM SUB-ASSY, REAR BRAKE						
	8008-	BJ60,HJ60,FJ60			42431-60020-	2	455	
		42403A PIECE, BALANCE (FOR REAR BRAKE DRUM)						
	8008-	BJ60,HJ60,FJ60	10G		90937-01117-	33	455	
	8008-	BJ60,HJ60,FJ60	20G		90937-01118-	33	455	
	8008-	BJ60,HJ60,FJ60	30G		90937-01119-	33	455	
	8008-	BJ60,HJ60,FJ60	40G		90937-01120-	33	455	
	8008-	BJ60,HJ60,FJ60	50G		90937-01121-	33	455	
	8008-	BJ60,HJ60,FJ60	60G		90937-01122-	33	455	
		42403B BOLT, SET	(FOR REAR BRAKE DRUM SETTING)					
	8008-	BJ60,HJ60,FJ60			90113-10003-	2	455	
		42411 HUB, REAR AXLE						
	8008-8110	BJ60,FJ60			42411-60011-	2	455	458
	8110-8210	FJ60				2	459	466
C	8608-	HJ60	W/DIFFERENTIAL LOCK			2	601	
		42411A PIN, STRAIGHT (FOR REAR AXLE HUB)						
	8008-8110	BJ60,FJ60			90250-07057-	4	455	458
	8110-8210	FJ60				4	459	466
C	8608-	HJ60	W/DIFFERENTIAL LOCK			4	601	

*DL = Differential Lock

	PROD.DATE	MODELS	DESCRIPTION	R/P	PART NUMBER	QTY	REV.REF.CODE FROM	REV.REF.CODE UP TO
		42411B BOLT, STUD (FOR REAR AXLE HUB)						
	8008-8110	BJ60,FJ60			90116-08325-	12	455	458
	8110-8210	FJ60				12	459	466
C	8608-	HJ60	W/DIFFERENTIAL LOCK			12	601	
		42411C BEARING, TAPERED ROLLER (FOR REAR AXLE INNER BEARING)						
	8008-8110	BJ60,FJ60			90368-49084-	2	455	458
	8110-8210	FJ60				2	459	466
C	8608-	HJ60	W/DIFFERENTIAL LOCK			2	601	
		42411D BEARING, TAPERED ROLLER (FOR REAR AXLE OUTER BEARING)						
	8008-8110	BJ60,FJ60			90368-45087-	2	455	458
	8110-8210	FJ60				2	459	466
C	8608-	HJ60	W/DIFFERENTIAL LOCK			2	601	
		42411E SEAL, OIL (FOR REAR AXLE HUB)						
	8008-8110	BJ60,FJ60			90311-62001-	2	455	458
	8110-8210	FJ60				2	459	466
C	8608-	HJ60	W/DIFFERENTIAL LOCK			2	601	
		42419 SCREW, BEARING LOCK NUT						
	8008-8110	BJ60,FJ60			42419-60011-	4	455	458
	8110-8210	FJ60				4	459	466
C	8608-	HJ60	W/DIFFERENTIAL LOCK			4	601	
		42420 HUB (OR SHAFT) & BRAKE DRUM REAR AXLE, RH						
	8008-8110	BJ60,FJ60	FULL FLOATING		# 42420-60070- (42420-60110-)	1	455	458
	8110-8305	FJ60	FULL FLOATING			1	459	480
		42427 NUT, REAR AXLE BEARING LOCK						
	8008-8104	BJ60,FJ60			# 42427-60020- (42427-60021-)	2	455	

	PROD.DATE	MODELS	DESCRIPTION	R/P	PART NUMBER	QTY	REV.REF.CODE FROM	REV.REF.CODE UP TO
		42427 NUT, REAR AXLE BEARING LOCK CONTINUED						
	8104-8110	BJ60,FJ60			42427-60021-	2		458
	8110-8210	FJ60				2	459	466
C	8608-	HJ60	W/DIFFERENTIAL LOCK			2	601	
		42428 PLATE, LOCK NUT						
	8008-8110	BJ60,FJ60			42428-60011-	2	455	458
	8110-8210	FJ60				2	459	466
C	8608-	HJ60	W/DIFFERENTIAL LOCK			2	601	
		42430 HUB (OR SHAFT) & BRAKE DRUM REAR AXLE, LH						
	8008-8110	BJ60,FJ60	FULL FLOATING	#	42420-60070- (42420-60110-)	1	455	458
	8110-8305	FJ60	FULL FLOATING			1	459	480
		42441 DEFLECTOR, BRAKE DRUM OIL						
	8008-	BJ60,HJ60,FJ60			42441-30010-	2	455	
		42443 GASKET, BRAKE DRUM OIL DEFLECTOR						
	8008-	BJ60,HJ60,FJ60			42443-55020-	2	455	
		42611E BOLT, HUB (FOR REAR AXLE)						
	8008-8411	BJ60,FJ60			# 90942-02034- (90942-02052-)	12	455	514
	8411-	BJ60,HJ60,FJ60			90942-02052--	12	515	

FIG.41-03 WHEEL CAP & WHEEL ASSEMBLY

2-G9

(8008-)

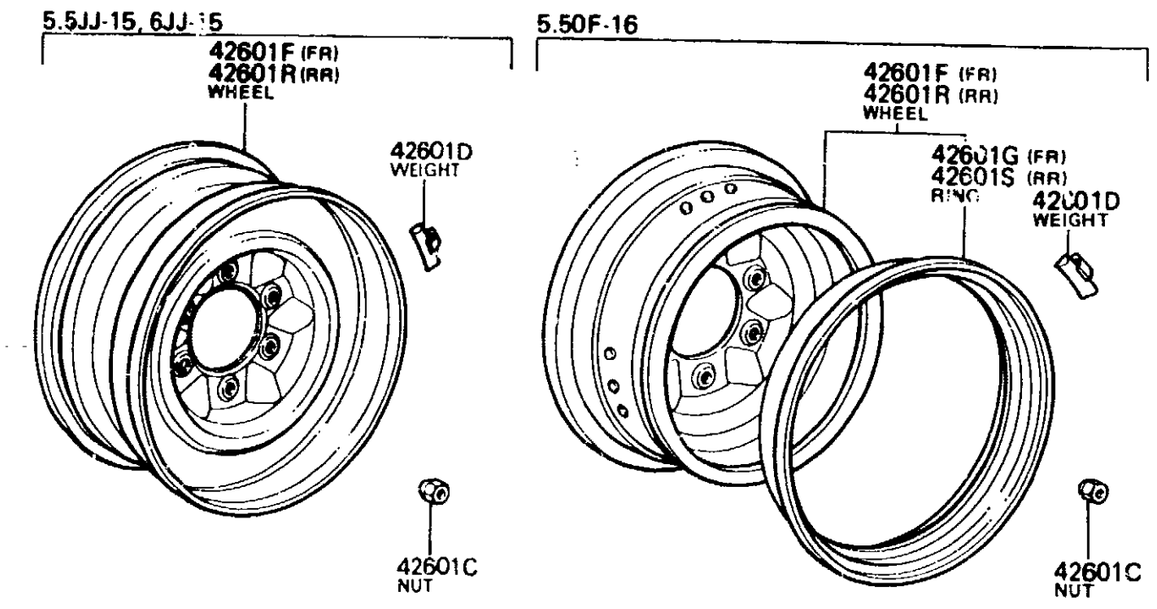

GENUINE TOYOTA PARTS

	PROD.DATE	MODELS	DESCRIPTION	R/P	PART NUMBER	QTY	REV.REF.CODE FROM	REV.REF.CODE UP TO
	FIG.	41-03 WHEEL CAP & WHEEL ASSEMBLY						
		42601C NUT, HUB (FOR AXLE)						
	8110-8210	BJ60			90942-01007-	24	459	466
	8008-8305	BJ60,FJ60	CAP NUT		90942-01030-	24	455	480
	8008-8110	BJ60,FJ60,,WGV			90942-01007-	24	455	458
	8305-	BJ60,HJ60,FJ60	CAP NUT		90942-01047-	24	481	
		42601D WEIGHT, BALANCE (FOR DISC WHEEL)						
	8008-8504	BJ60,FJ60	20G		90942-03079-	33	455	554
	8008-8504	BJ60,FJ60	30G		90942-03080-	33	455	554
	8008-8504	BJ60,FJ60	40G		90942-03081-	33	455	554
	8008-8504	BJ60,FJ60	50G		90942-03082-	33	455	554
	8008-8504	BJ60,FJ60	60G		90942-03083-	33	455	554
	8008-8504	BJ60,FJ60	70G		90942-03084-	33	455	554
	8008-8504	BJ60,FJ60	80G		90942-03085-	33	455	554
	8008-8504	BJ60,FJ60	100G		90942-03086-	33	455	554
	8008-8504	BJ60,FJ60	10G		90942-03107-	33	455	554
	8504-	BJ60,HJ60,FJ60	20G		90942-03079-	33	555	
	8504-	BJ60,HJ60,FJ60	30G		90942-03080-	33	555	
	8504-	BJ60,HJ60,FJ60	40G		90942-03081-	33	555	
	8504-	BJ60,HJ60,FJ60	50G		90942-03082-	33	555	
	8504-	BJ60,HJ60,FJ60	60G		90942-03083-	33	555	
	8504-	BJ60,HJ60,FJ60	70G		90942-03084-	33	555	
	8504-	BJ60,HJ60,FJ60	80G		90942-03085-	33	555	
	8504-	BJ60,HJ60,FJ60	100G		90942-03086-	33	555	
	8504-	BJ60,HJ60,FJ60	10G		90942-03107-	33	555	
		42601F WHEEL, DISC (FOR FRONT)						
	8008-8504	BJ60,FJ60	6JJ-15,CHROME PLATED		42601-60150-	2	455	554
	8008-8110	BJ60,FJ60,,WGV	5.5JJ-15		42601-60082-	2	455	458
C	8008-8608	BJ60,HJ60,FJ60	6JJ-15,WHITE		42601-60130-05	2	455	600
	8504-	BJ60,HJ60,FJ60	6JJ-15,CHROME PLATED		42601-60150-	2	555	

PROD.DATE	MODELS	DESCRIPTION	R/P	PART NUMBER	QTY	REV.REF.CODE FROM	REV.REF.CODE UP TO
	42601R WHEEL, DISC (FOR REAR)						
8008-8504	BJ60,FJ60	6JJ-15,CHROME PLATED		42601-60150-	2	455	554
8008-8110	BJ60,FJ60,*WGV	5.5JJ-15		42601-60082-	2	455	458
C 8008-8608	BJ60,HJ60,FJ60	6JJ-15,WHITE		42601-60130-05	2	455	600
8504-	BJ60,HJ60,FJ60	6JJ-15,CHROME PLATED		42601-60150-	2	555	
	42603 ORNAMENT SUB-ASSY, WHEEL HUB						
8008-8110	BJ60,FJ60	RR,*FFA,W/WHITE WHEEL		42603-60010-	2	455	458
8008-8110	BJ60,FJ60	RR,*FFA,W/CHROME WHEEL		42603-60020-	2	455	458
8008-8110	BJ60,FJ60	FR,W/*FWH & WHITE WHEEL		42603-60030-	2	455	458
8008-8110	BJ60,FJ60	FR,W/*FWH & CHROME WHEEL		42603-60040-	2	455	458
8008-8110	BJ60,FJ60	RR,*SFA,W/WHITE WHEEL		42603-60050-	2	455	458
8008-8110	BJ60,FJ60	RR,*SFA,W/CHROME WHEEL		42603-60060-	2	455	458
8110-8411	BJ60,FJ60	FR,W/*FWH & CHROME WHEEL		42603-35090-	2	459	514
8110-8411	BJ60,FJ60	RR,*SFA,W/CHROME WHEEL		42603-60061-	2	459	514
8110-	BJ60,HJ60,FJ60	FR,W/*FWH & WHITE WHEEL		42603-35080-	2	459	
8411-	BJ60,HJ60,FJ60	RR,*SFA,W/WHITE WHEEL		42603-60052-	2	515	
8110-8411	FJ60	RR,*SFA,W/WHITE WHEEL		42603-60051-	2	459	514
8110-8504	FJ60	RR,*FFA,W/WHITE WHEEL		42603-60011-	2	459	554

* FFA = Full-Floating Axle
* FWH = Free Wheel Hub
* SFA = Semi-Floating Axle
* (D) = Dunlop Rubber Company (Japan) Limited

PROD.DATE	MODELS	DESCRIPTION	R/P	PART NUMBER	QTY	REV.REF.CODE FROM	REV.REF.CODE UP TO
	42603 CONTINUED ORNAMENT SUB-ASSY, WHEEL HUB						
8110-8504	FJ60	RR,*FFA,W/CHROME WHEEL		42603-60021-	2	459	554
8411-8504	FJ60	FR,W/*FWH & CHROME WHEEL		42603-35090-	2	515	554
8411-8504	FJ60	RR,*SFA,W/CHROME WHEEL		42603-60061-	2	515	554
8510-	HJ60..MTM	RR,*SFA,W/WHITE WHEEL		42603-60012-	2	567	
	42611A TIRE TUBE	SET OR TUBELESS TIRE					
8411-8510	BJ60	HR78-15,BLACK		42652-35170-	4	515	566
8008-8108	BJ60,FJ60	H78-15-4,SNOW		42652-60022- (42652-35100-)	4	455	
8108-8411	BJ60,FJ60	H78-15-4,SNOW		42652-35100-	4		514
8008-8504	FJ60	H78-15-4,SEMI LUG,*(D)		42652-60011-	4	455	554
8008-8504	FJ60	H78-15-4,SEMI LUG,*(Y)		42652-60030-	4	455	554
8008-8504	FJ60	H78-15-4,SEMI LUG,*(B)		42652-60040-	4	455	554
8411-8504	FJ60	H78-15-4,SNOW		42652-35100-	4	515	554
8504-	HJ60,FJ60	HR78-15,BLACK		42652-35170-	4	555	
	42611G VALVE (FOR TUBELESS TIRE)						
8008-	BJ60,HJ60,FJ60			90942-05009-	4	455	

* (Y)=The Yokohama Rubber Company Limited
* (B) = Bridgestone Company Limited

FIG.42--01 DIFFERENTIAL LOCK CONTROL

MR4-11-0442

(8608-)

ILLUST.NO. 10F2

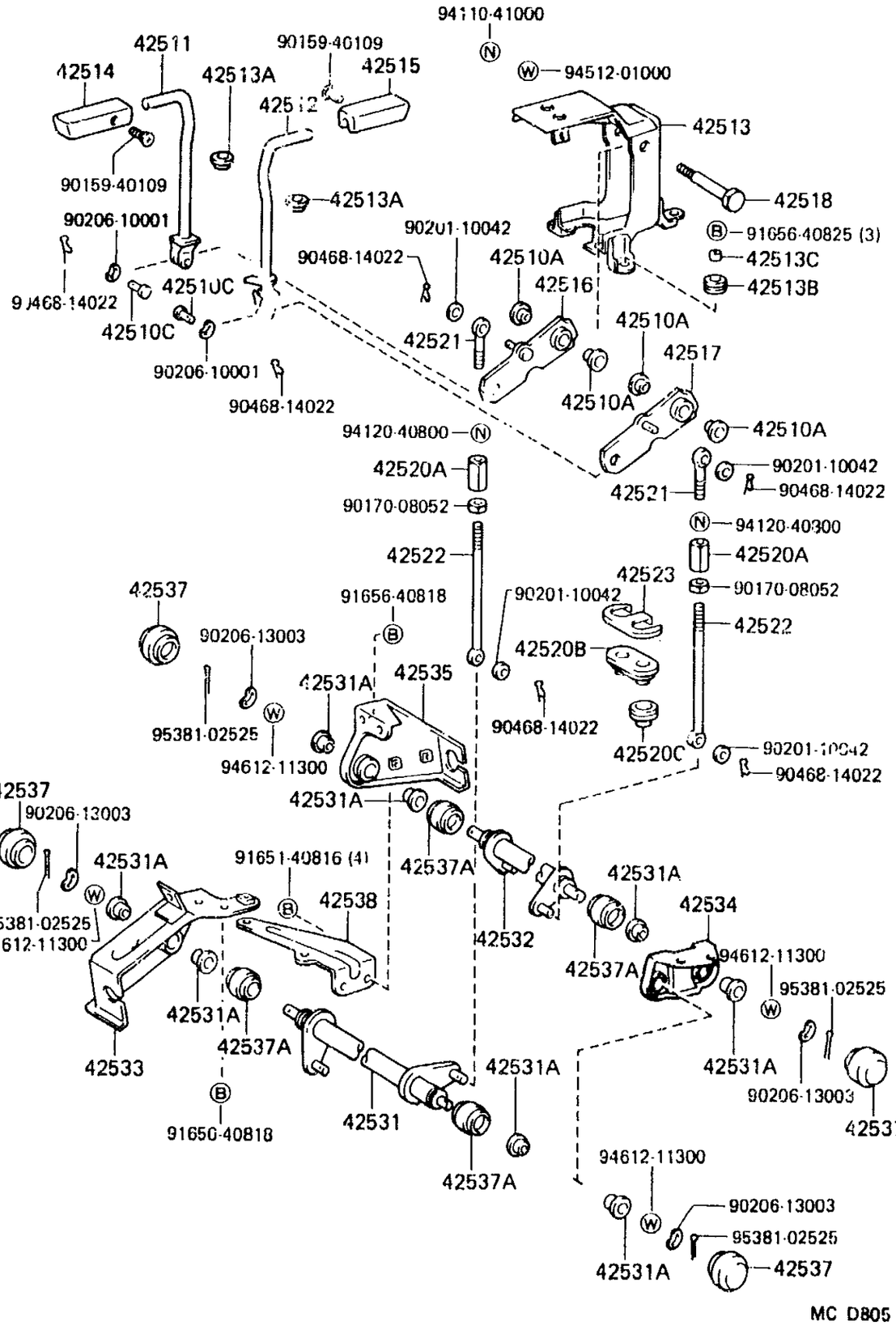

MC D805

(8608-)

ILLUST.NO. 20F2

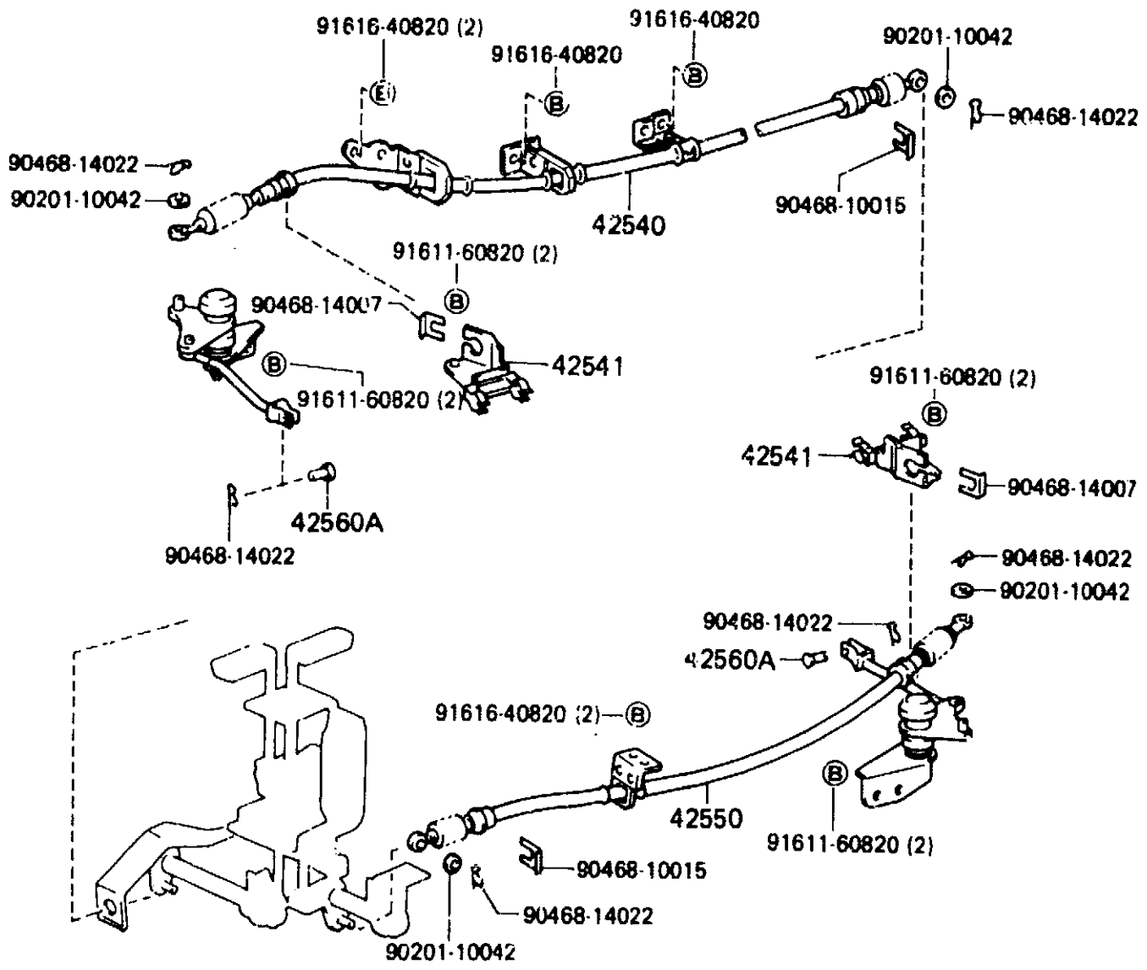

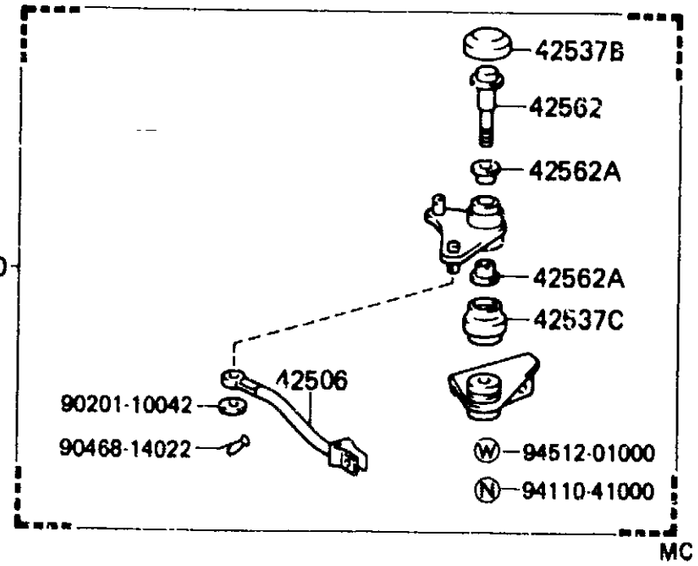

MC C981

GENUINE TOYOTA PARTS

	PROD.DATE	MODELS	DESCRIPTION	R/P	PART NUMBER	QTY	REV.REF.CODE FROM	REV.REF.CODE UP TO
	FIG.	42-01 DIFFERENTIAL LOCK CONTROL						
		42506	ROD SUB-ASSY, DIFFERENTIAL LOCK CABLE LINK					
C	8608-	HJ60			42506-60010-	2	601	
		42510A	BUSH (FOR DIFFERENTIAL LOCK LEVER)					
C	8608-	HJ60			90386-13014-	4	601	
		42510C	PIN, W/HOLE (FOR DIFFERENTIAL LOCK LEVER)					
C	8608-	HJ60			90240-10148-	2	601	
		42511	LEVER, DIFFERENTIAL LOCK, FRONT					
C	8608-	HJ60			42511-60010-	1	601	
		42512	LEVER, DIFFERENTIAL LOCK, REAR					
C	8608-	HJ60			42512-60010-	1	601	
		42513	BRACKET, DIFFERENTIAL LOCK					
C	8608-	HJ60			42513-60010-	1	601	
		42513A	GROMMET (FOR DIFFERENTIAL LOCK LEVER)					
C	8608-	HJ60			90480-17019-	2	601	
		42513B	GROMMET (FOR DIFFERENTIAL LOCK BRACKET)					
C	8608-	HJ60			90480-13012-	3	601	
		42513C	COLLER (FOR DIFFERENTIAL LOCK BRACKET)					
C	8608-	HJ60			90387-09011-	3	601	
		42514	KNOB, DIFFERENTIAL LOCK, FRONT					
C	8608-	HJ60			42514-60010-	1	601	
		42515	KNOB, DIFFERENTIAL LOCK, REAR					
C	8608-	HJ60			42515-60010-	1	601	
		42516	LINK, DIFFERENTIAL LOCK, FRONT					
C	8608-	HJ60			42516-60010-	1	601	
		42517	LINK, DIFFERENTIAL LOCK, REAR					
C	8608-	HJ60			42517-60010-	1	601	
		42518	SHAFT, DIFFERENTIAL LOCK LINK					
C	8608-	HJ60			42518-60010-	1	601	
		42520A	TURN BUCKLE (FOR DIFFERENTIAL LOCK ROD)					
C	8608-	HJ60			90587-08001-	2	601	
		42520B	GROMMET (FOR DIFFERENTIAL LOCK ROD)					
C	8608-	HJ60			90480-01336-	1	601	
		42520C	GROMMET (FOR DIFFERENTIAL LOCK ROD)					
C	8608-	HJ60			90480-20016-	2	601	
		42521	ROD, DIFFERENTIAL LOCK, NO.1					
C	8608-	HJ60			42521-60010-	2	601	
		42522	ROD, DIFFERENTIAL LOCK, NO.2					
C	8608-	HJ60			42522-60010-	2	601	
		42523	COVER, DIFFERENTIAL LOCK GROMMET					
C	8608-	HJ60			42523-60010-	1	601	
		42531	SHAFT, DIFFERENTIAL LOCK CONTROL, FRONT					
C	8608-	HJ60			42531-60030-	1	601	
		42531A	BUSH (FOR DIFFERENTIAL LOCK CONTROL SHAFT)					
C	8608-	HJ60			90386-13014-	8	601	
		42532	SHAFT, DIFFERENTIAL LOCK CONTROL, REAR					
C	8608-	HJ60			42532-60030-	1	601	
		42533	BRACKET, DIFFERENTIAL LOCK CONTROL, FRONT NO.1					
C	8608-	HJ60			42533-60010-	1	601	
		42534	BRACKET, DIFFERENTIAL LOCK CONTROL, FRONT NO.2					
C	8608-	HJ60			42534-60030-	1	601	

	PROD.DATE	MODELS	DESCRIPTION	R/P	PART NUMBER	QTY	REV.REF.CODE FROM	REV.REF.CODE UP TO
		42535	BRACKET, DIFFERENTIAL LOCK CONTROL, REAR NO.1					
C	8608-	HJ60			42535-60010-	1	601	
		42537	COVER, CONTROL SHAFT DUST, NO.1					
C	8608-	HJ60			42537-60010-	4	601	
		42537A	COVER, CONTROL SHAFT DUST, NO.2					
C	8608-	HJ60			33789-36010-	4	601	
		42537B	COVER, CONTROL SHAFT DUST, NO.3					
C	8608-	HJ60			42537-60010-	2	601	
		42537C	COVER, CONTROL SHAFT DUST, NO.4					
C	8608-	HJ60			33789-36010-	2	601	
		42538	STAY, CONTROL SHAFT BRACKET					
C	8608-	HJ60			42538-60010-	1	601	
		42540	CABLE ASSY, DIFFERENTIAL LOCK, FRONT					
C	8608-	HJ60			42540-60010-	1	601	
		42541	BRACKET, DIFFERENTIAL LOCK CABLE					
C	8608-	HJ60			42541-60010-	2	601	
		42550	CABLE ASSY, DIFFERENTIAL LOCK, REAR					
C	8608-	HJ60			42550-60010-	1	601	
		42560	LINK ASSY, DIFFERENTIAL LOCK CABLE					
C	8608-	HJ60			42560-60010-	2	601	
		42560A	PIN, W/HOLE (FOR DIFFERENTIAL LOCK CABLE LINK)					
C	8608-	HJ60			90240-09001-	4	601	
		42562	SHAFT, DIFFERENTIAL LOCK CABLE LINK					
C	8608-	HJ60			42562-60010-	2	601	
		42562A	BUSH (FOR DIFFERENTIAL LOCK CABLE LINK SHAFT)					
C	8608-	HJ60			90386-13014-	4	601	

FIG.43-01 FRONT AXLE HOUSING & DIFFERENTIAL 2-L9

MR4-11-0443

(8008-)

(8008-8411)BJ60,FJ60; (8411-8504)FJ60

ILLUST.NO. 1OF3

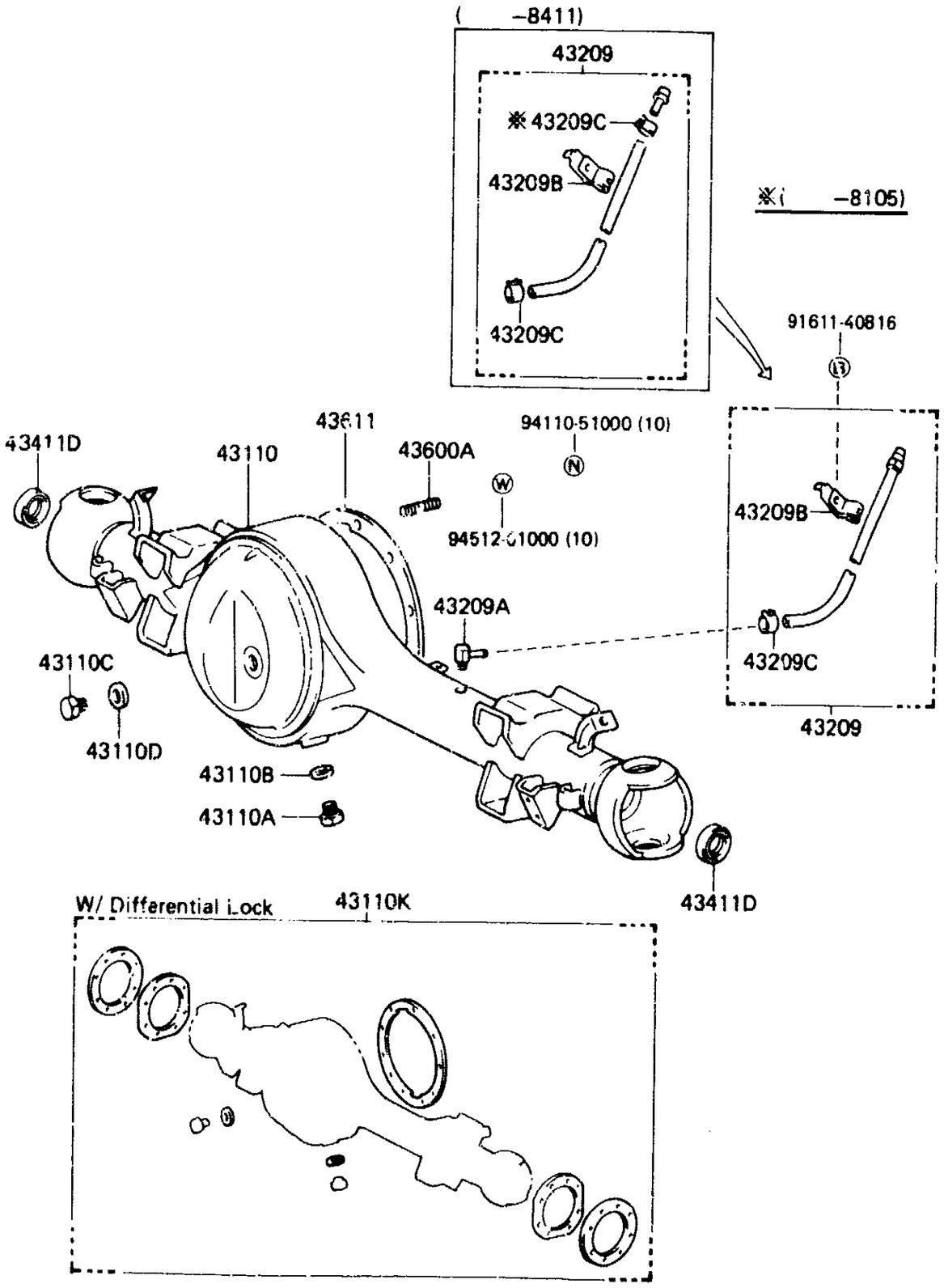

MC 7225-E

ILLUST.NO. 2OF3

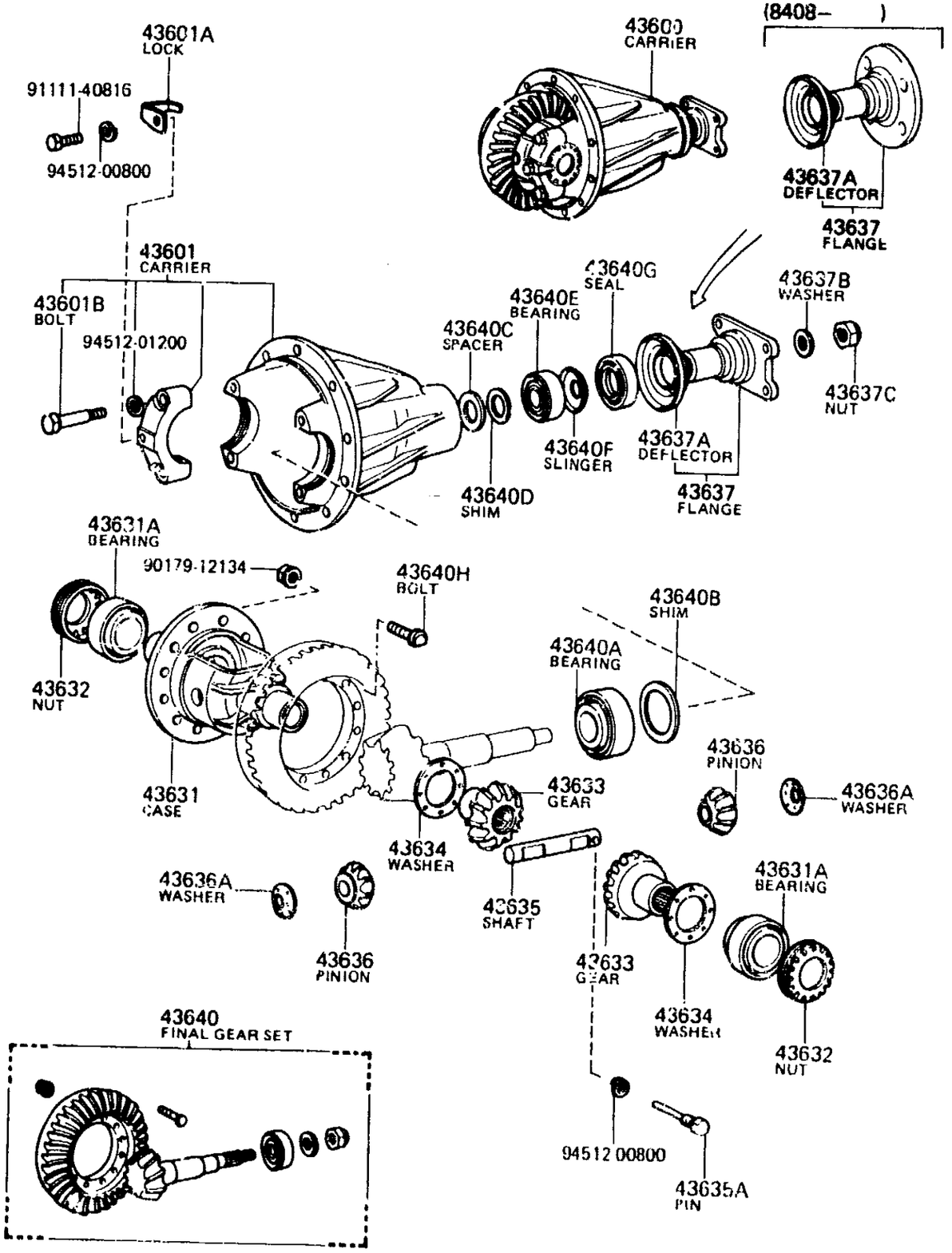

MC C032

FIG•43-01 FRONT AXLE HOUSING & DIFFERENTIAL

2-M19

MR4-11-0444

(8411-8510)BJ60; (8504-)FJ60; (8510-)HJ60 (8608-)

ILLUST•NO• 20F3

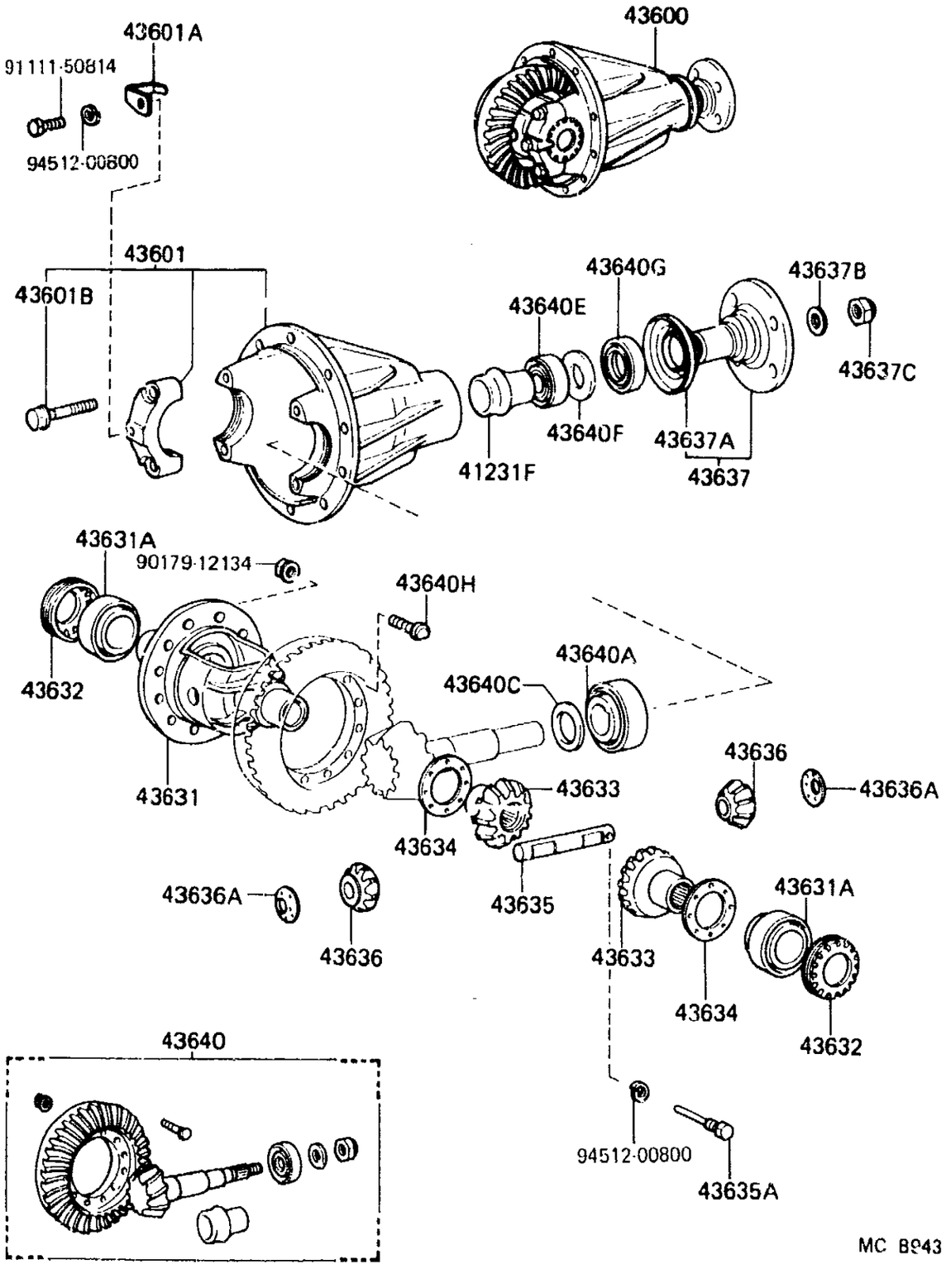

MC 8943

W/ Differential Lock

ILLUST•NO• 20F3

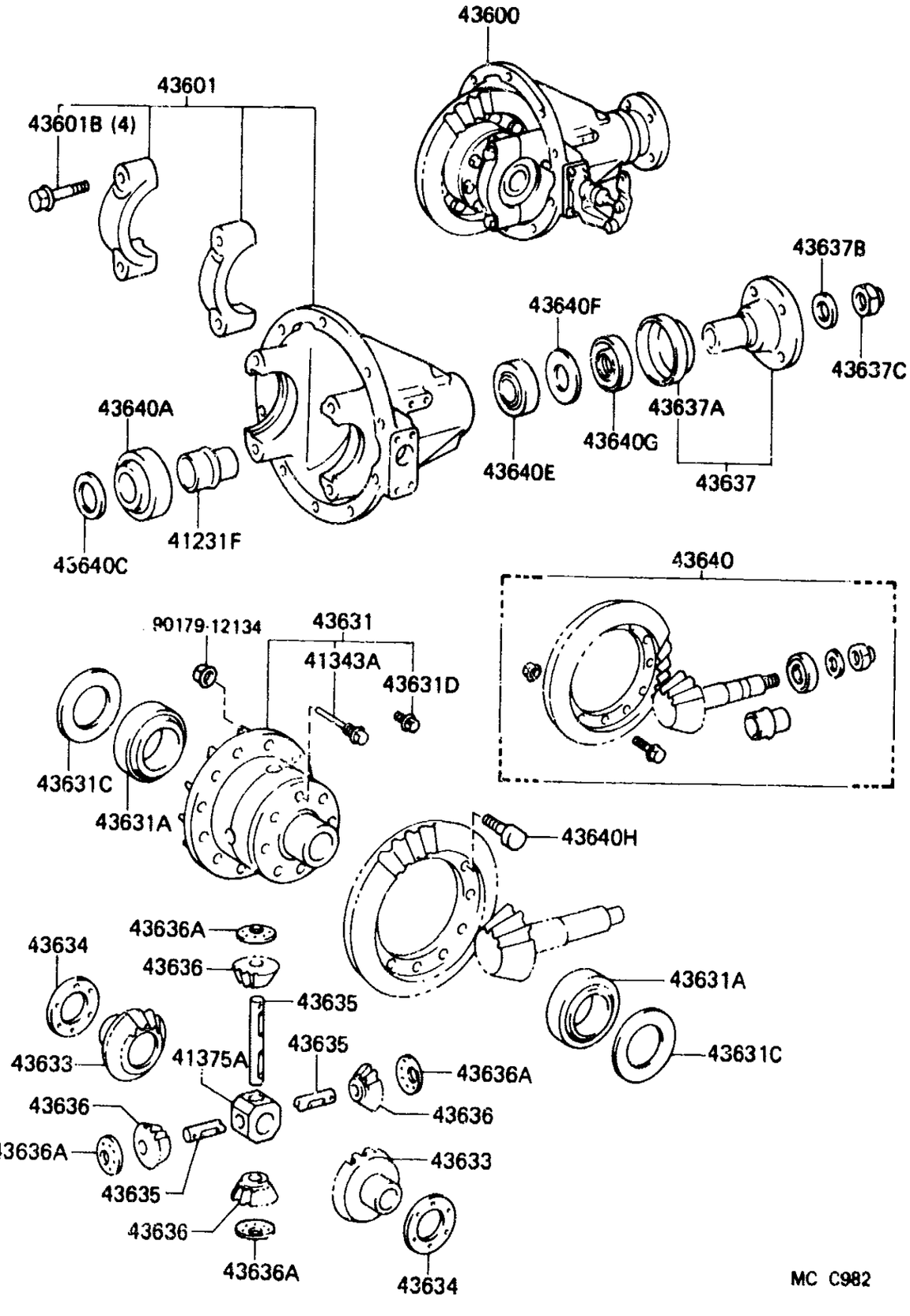

MC C982

(8608-)

ILLUST•NO• 30F3

W/ Differential Lock

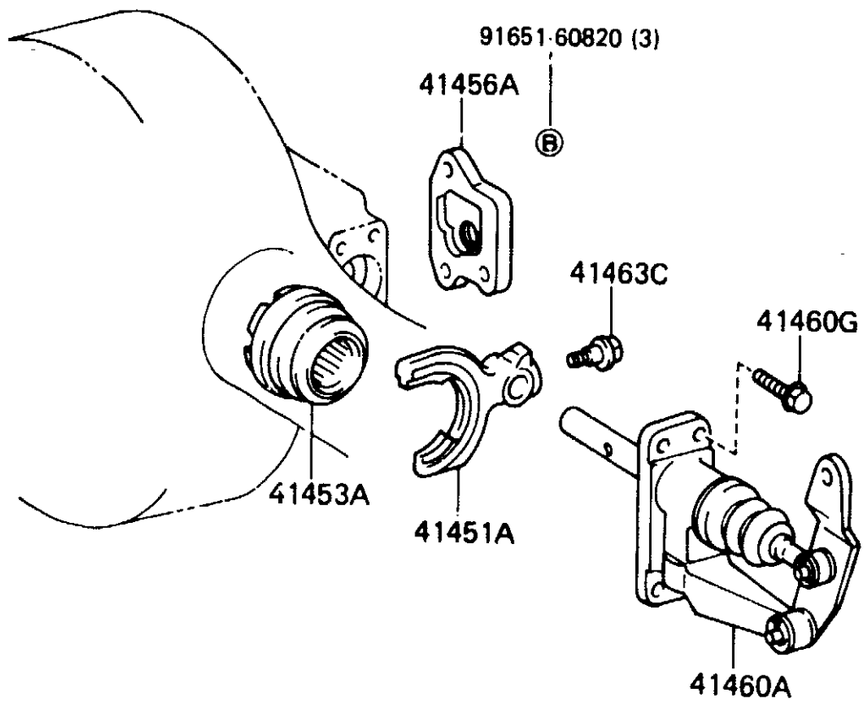

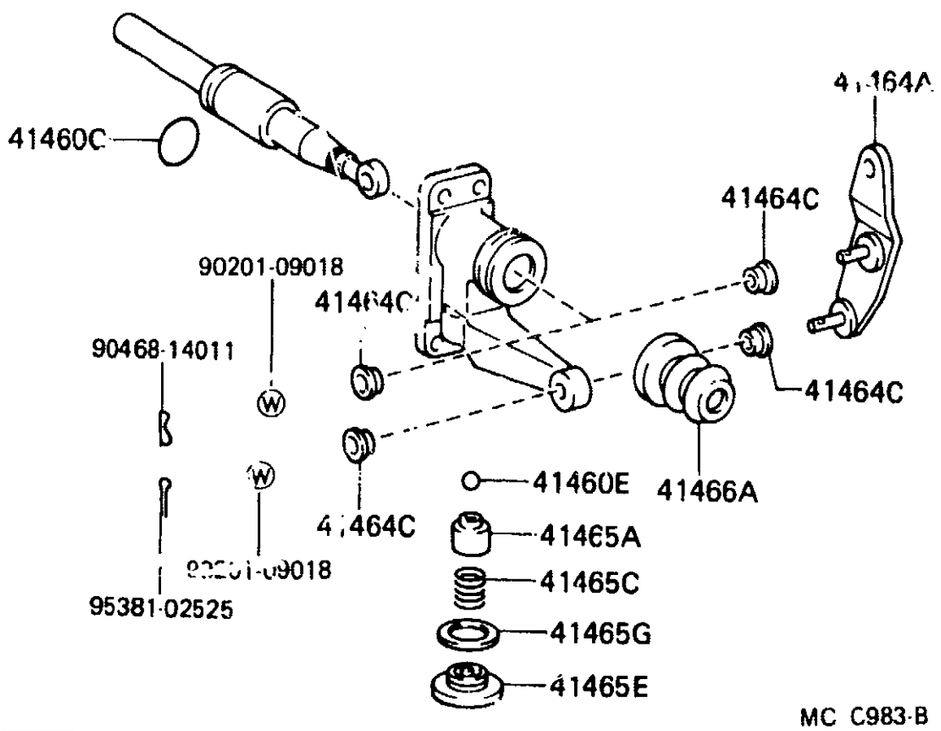

MC C983-B

GENUINE TOYOTA PARTS

	PROD.DATE	MODELS	DESCRIPTION	R/P	PART NUMBER	QTY	REV.REF.CODE FROM	REV.REF.CODE UP TO
	FIG•	43-01 FRONT AXLE HOUSING & DIFFERENTIAL						
		41231F SPACER, FRONT DIFFERENTIAL DRIVE PINION BEARIN G						
	8608-	BJ60,HJ60,FJ60			41231-60020-	1	601	
		41343A PIN, FRONT DIFFERENTIAL PINION SHAFT						
C	8608-	HJ60	W/DIFFEREN TIAL LOCK		41343-60010-	3	601	
		41375A HOLDER, FRONT DIFFERENTIAL PINION SHAFT						
C	8608-	HJ60	W/DIFFEREN TIAL LOCK		41375-60010-	1	601	
		41451A FORK, FRONT DIFFERENTIAL LOCK SHIFT						
C	8608-	HJ60			41451-60010-	1	601	
		41453A SLEEVE, FRONT DIFFERENTIAL LOCK						
C	8608-	HJ60			41453-60010-	1	601	
		41456A COVER, FRONT DIFFERENTIAL LOCK						
C	8608-	HJ60			41456-60010-	1	601	
		41460A CYLINDER ASSY, FRONT DIFFERENTIAL LOCK						
C	8608-	HJ60			41460-60010-	1	601	
		41460C RING, O (FOR FRONT DIFFERENTIAL LOCK CYLINDER)						
C	8608-	HJ60			96711-24023-	1	601	
		41460E BALL (FOR FRONT DIFFERENTIAL LOCK CYLINDER)						
C	8608-	HJ60			90360-10003-	1	601	
		41460G BOLT (FOR FRONT DIFFERENTIAL LOCK CYLINDER SET)						
C	8608-	HJ60			90105-08114-	1	601	
		41463C BOLT (FOR FRONT DIFFERENTIAL LOCK SHIFT FORK S HAFT SET)						
C	8608-	HJ60			90105-06052-	1	601	
		41464A LEVER, FRONT DIFFERENTIAL LOCK CYLINDER						
C	8608-	HJ60			41464-60010-	1	601	

	PROD.DATE	MODELS	DESCRIPTION	R/P	PART NUMBER	QTY	REV.REF.CODE FROM	REV.REF.CODE UP TO
		41464C BUSH (FOR FRONT DIFFERENTIAL LOCK CYLINDER LEVER)						
C	8608-	HJ60			90386-09009-	4	601	
		41465A RETAINER, FRONT DIFFERENTIAL LOCK SPRING						
C	8608-	HJ60			41465-60010-	1	601	
		41465C SPRING, COMPRESSION(FOR FRONT DIFFERENTIAL LOCK RETAINER)						
C	8608-	HJ60			90501-20083-	1	601	
		41465E PLUG (FOR FRONT DIFFERENTIAL LOCK CYLINDER)						
C	8608-	HJ60			90341-26001-	1	601	
		41465G GASKET (FOR FRONT DIFFERENTIAL LOCK CYLINDER)						
C	8308-	HJ60			90430-26002-	1	601	
		41466A BOOT, FRONT DIFFERENTIAL LOCK CYLINDER						
C	8608-	HJ60			41466-60010-	1	601	
		43110 HOUSING ASSY, FRONT AXLE						
	8008-8411	BJ60			43110-60150-	1	455	514
	8411-8510	BJ60			43110-60152-	1	515	566
	8008-8504	FJ60			43110-60140-	1	455	554
C	8504-8608	FJ60			43110-60142-	1	555	600
C	8608-	FJ60			43110-60260-	1	601	
C	8510-8608	HJ60			43110-60143-	1	567	600
C	8608-	HJ60			43110-60144-	1	601	
C	8608-	HJ60	W/DIFFERENTIAL LOCK		43110-60211-	1	601	
		43110A PLUG SUB-ASSY, DRAIN						
	8008-	BJ60,HJ60,FJ60			90341-18057-	1	455	
		43110B GASKET, DRAIN						
	8008-	BJ60,HJ60,FJ60			12157-10010-	1	455	
		43110C PLUG (FOR FRONT AXLE HOUSING)						
	8411-8504	BJ60			90341-18006-	1	515	554

	PROD.DATE	MODELS	DESCRIPTION	R/P	PART NUMBER	QTY	REV.REF.CODE FROM	REV.REF.CODE UP TO
		43110C PLUG (FOR FRONT AXLE HOUSING) CONTINUED						
	8008-8411	BJ60,FJ60			90341-18049-	1	455	514
	8504-	BJ60,HJ60,FJ60			90341-18006-	1	555	
	8411-8504	FJ60			90341-18049-	1	515	554
		43110D GASKET (FOR FRONT AXLE HOUSING PLUG)						
	8008-	BJ60,HJ60,FJ60			12157-10010-	1	455	
		43110K GASKET KIT, DIFFERENTIAL CARRIER						
C	8608-	HJ60	W/DIFFERENTIAL LOCK		04412-60020-	1	601	
		43209 HOSE SUB-ASSY, FRONT AXLE BREATHER						
	8008-8411	BJ60			43209-60030-	1	455	514
	8411-8510	BJ60			43209-60031-	1	515	566
	8008-8504	FJ60			# 43209-60010- (43209-60011-)	1	455	554
	8504-	FJ60			43209-60011-	1	555	
	8510-	HJ60			43209-60060-	1	567	
		43209A UNION (FOR FRONT AXLE BREATHER HOSE)						
	8008-	BJ60,HJ60,FJ60			90404-10019-	1	455	
		43209B CLAMP (FOR FRONT AXLE BREATHER HOSE)						
	8411-8510	BJ60			90949-01213-	1	515	566
	8008-8411	BJ60,FJ60			90461-10387-	1	455	514
	8411-	HJ60,FJ60				1		
		43209C CLIP, HOSE (FOR FRONT AXLE BREATHER HOSE)						
	8008-	BJ60,HJ60,FJ60			96132-30600-	2	455	
		43411D SEAL, TYPE T OIL (FOR FRONT DRIVE SHAFT)						
	8008-	BJ60,HJ60,FJ60			90311-33085-	2	455	
		43600 CARRIER ASSY, FRONT AXLE						
	8411-8504	BJ60	*FGR=37:10 ,*AXC=K052		41110-60100-	1	515	554
	8008-8408	BJ60,FJ60	*FGR=37:10 ,*AXC=K052		41110-60026-	1	455	
	8408-8411	BJ60,FJ60	*FGR=37:10 ,*AXC=K052	#	41110-60027- (41110-60028-)	1		514

* FGR = Final Gear Ratio
* AXC = Axle Code (Stated in TRANS/AXLE Column of Name Plate)

GENUINE TOYOTA PARTS

	PROD.DATE	MODELS	DESCRIPTION	R/P	PART NUMBER	QTY	REV.REF.CODE FROM	REV.REF.CODE UP TO
		43600 | CARRIER ASSY, FRONT AXLE CONTINUED						
	8504-	BJ60,HJ60,FJ60..MTM	*FGR=37:10 ,*AXC=K052		41110-60100-	1	555	
	8411-8504	FJ60	*FGR=37:10 ,*AXC=K052		41110-60028-	1	515	554
	8510-	HJ60..ATM	*FGR=37:9, *AXC=K082		41110-60110-	1	567	
C	8608-	HJ60..ATM	*FGR=37:9, *AXC=K084, W/*DL		41110-60230-	1	601	
C	8608-	HJ60..MTM	*FGR=37:10 ,*AXC=K054 ,W/*DL		41110-60220-	1	601	
		43600A | BOLT, STUD (FOR FRONT AXLE DIFFERENTIAL CARRIER SETTING)						
	8008-8212	BJ60,FJ60	L=37,S=12 & 25	#	90116-10103- (90116-10074-)	8	455	
	8008-8212	BJ60,FJ60	L=50,S=12 & 18		90116-10104-	2	455	
	8212-	BJ60,HJ60,FJ60	L=37,S=12 & 25		90116-10074-	8		
	8212-	BJ60,HJ60,FJ60	L=50,S=12 & 18		90116-10075-	2		
C	8608-	HJ60	L=77,W/DIFFERENTIAL LOCK		90116-10122-	2	601	
		43601 | CARRIER SUB-ASSY, FRONT AXLE						
	8411-8504	BJ60			41101-60040-	1	515	554
	8008-8411	BJ60,FJ60		#	41101-60021- (41101-60H00-)	1	455	514
	8504-	BJ60,HJ60,FJ60			41101-60040-	1	555	
	8411-8504	FJ60		#	41101-60021- (41101-60H00-	1	515	554
C	8608-	HJ60	W/DIFFERENTIAL LOCK		41101-60080-	1	601	
		43601A | LOCK, FRONT AXLE DIFFERENTIAL ADJUST NUT						
	8008-	BJ60,HJ60,FJ60			41316-30010-	2	455	
		43601B | BOLT, FRONT AXLE DIFFERENTIAL BEARING CAP						
	8008-8411	BJ60,FJ60			41114-35010-	4	455	514

	PROD.DATE	MODELS	DESCRIPTION	R/P	PART NUMBER	QTY	REV.REF.CODE FROM	REV.REF.CODE UP TO
		43601B | BOLT, FRONT AXLE DIFFERENTIAL BEARING CAP CONTINUED						
	8411-	BJ60,HJ60,FJ60			90105-12053-	4	515	
C	8608-	HJ60	W/DIFFERENTIAL LOCK		41114-60010-	4	601	
		43611 | GASKET, FRONT AXLE DIFFERENTIAL CARRIER						
	8008-	BJ60,HJ60,FJ60			42181-36010-	1	455	
C	8608-	HJ60	W/DIFFERENTIAL LOCK		42181-60030-	1	601	
		43631 | CASE, FRONT AXLE DIFFERENTIAL						
	8008-	BJ60,HJ60,FJ60			41311-36010-	1	455	
C	8608-	HJ60	W/DIFFERENTIAL LOCK		41301-60020-	1	601	
		43631A | BEARING, FRONT AXLE DIFFERENTIAL						
	8008-	BJ60,HJ60,FJ60			90368-45066-	2	455	
C	8608-	HJ60	W/DIFFERENTIAL LOCK		90366-60002-	2	601	
		43631C | WASHER (FRONT DIFFERENTIAL TAPERED ROLLER BEARING)						
C	8608-	HJ60	MARK 01		90201-79001-	2	601	
C	8608-	HJ60	MARK 02		90201-79002-	2	601	
C	8608-	HJ60	MARK 03		90201-79003-	2	601	
C	8608-	HJ60	MARK 04		90201-79004-	2	601	
C	8608-	HJ60	MARK 05		90201-79005-	2	601	
C	8608-	HJ60	MARK 06		90201-79006-	2	601	
C	8608-	HJ60	MARK 07		90201-79007-	2	601	
C	8608-	HJ60	MARK 08		90201-79008-	2	601	
C	8608-	HJ60	MARK 09		90201-79009-	2	601	
C	8608-	HJ60	MARK 10		90201-79010-	2	601	
C	8608-	HJ60	MARK 11		90201-79011-	2	601	
C	8608-	HJ60	MARK 12		90201-79012-	2	601	
C	8608-	HJ60	MARK 13		90201-79013-	2	601	
C	8608-	HJ60	MARK 14		90201-79014-	2	601	
C	8608-	HJ60	MARK 15		90201-79015-	2	601	

* FGR = Final Gear Ratio
* AXC = Axle Code (Stated in TRANS/AXLE Column of Name Plate)
* DL = Differential Lock

GENUINE TOYOTA PARTS

	PROD.DATE	MODELS	DESCRIPTION	R/P	PART NUMBER	QTY	REV.REF.CODE FROM	REV.REF.CODE UP TO
		43631C WASHER (FRONT DIFFERENTIAL TAPERED ROLLER BEARING) CONTINUED						
C	8608-	HJ60	MARK 16		90201-79016-	2	601	
C	8608-	HJ60	MARK 17		90201-79017-	2	601	
C	8608-	HJ60	MARK 18		90201-79018-	2	601	
C	8608-	HJ60	MARK 19		90201-79019-	2	601	
C	8608-	HJ60	MARK 20		90201-79020-	2	601	
C	8608-	HJ60	MARK 21		90201-79021-	2	601	
C	8608-	HJ60	MARK 22		90201-79022-	2	601	
C	8608-	HJ60	MARK 23		90201-79023-	2	601	
		43631D BOLT, HEXAGON (FOR DIFFERENTIAL CASE)						
C	8608-	HJ60	W/DIFFERENTIAL LOCK		90109-10091-	5	601	
		43632 NUT, FRONT AXLE DIFFERENTIAL BEARING ADJUST						
	8008-	BJ60,HJ60,FJ60			41315-30010-	2	455	
		43633 GEAR, FRONT AXLE DIFFERENTIAL SIDE						
	8008-	BJ60,HJ60,FJ60			41331-35020-	2	455	
C	8608-	HJ60	W/DIFFERENTIAL LOCK		41331-60020-	2	601	
		43634 WASHER, FRONT AXLE DIFFERENTIAL SIDE GEAR THRUST						
	8008-	BJ60,HJ60,FJ60	T=1.55-1.65		41361-60010-	2	455	
	8008-	BJ60,HJ60,FJ60	T=1.70-1.80		41361-60020-	2	455	
	8008-	BJ60,HJ60,FJ60	T=1.85-1.95		41361-60030-	2	455	
	8008-	BJ60,HJ60,FJ60	T=2.00-2.10		41361-60040-	2	455	
		43635 SHAFT, FRONT AXLE DIFFERENTIAL PINION						
	8008-	BJ60,HJ60,FJ60			41342-55010-	1	455	
C	8608-	HJ60	L=136.0,W/DIFFERENTIAL LOCK		41342-60010-	1	601	
C	8608-	HJ60	L=60.5,W/DIFFERENTIAL LOCK		41342-60020-	2	601	

GENUINE TOYOTA PARTS

PROD.DATE	MODELS	DESCRIPTION	R/P	PART NUMBER	QTY	REV.REF.CODE FROM	REV.REF.CODE UP TO
	43635A PIN, FRONT AXLE DIFFERENTIAL PINION SHAFT						
8008-	BJ60,HJ60,FJ60			41343-55010-	1	455	
	43636 PINION, FRONT AXLE DIFFERENTIAL						
8008-	BJ60,HJ60,FJ60			41341-55012-	2	455	
	43636A WASHER, FRONT AXLE DIFFERENTIAL PINION THRUST						
8008-	BJ60,HJ60,FJ60			41351-35011-	2	455	
	43637 FLANGE, FRONT AXLE DRIVE PINION, W/DEFLECTOR						
8008-8408	BJ60,FJ60			41204-60010-	1	455	
8408-	BJ60,HJ60,FJ60			41204-60030-	1		
	43637A DEFLECTOR, DUST (FOR FRONT AXLE)						
8008-8408	BJ60,FJ60			37341-30010-	1	455	
8408-	BJ60,HJ60,FJ60			41252-35010-	1		
	43637B WASHER, PLATE (FOR FRONT AXLE DRIVE PINION)						
8411-8504	BJ60			90201-22007-	1	515	554
8008-8411	BJ60,FJ60			90201-20005-	1	455	514
8504-	BJ60,HJ60,FJ60			90201-22007-	1	555	
8411-8504	FJ60			90201-20005-	1	515	554
	43637C NUT, CASTLE (FOR FRONT AXLE DRIVE PINION)						
8411-8504	BJ60			90179-22011-	1	515	554
8008-8411	BJ60,FJ60			90179-20001-	1	455	514
8504-	BJ60,HJ60,FJ60			90179-22011-	1	555	
8411-8504	FJ60			90179-20001-	1	515	554
	43640 FINAL GEAR SET, FRONT AXLE DIFFERENTIAL						
8411-8504	BJ60	N=37:10	#	41201-69155- (41201-69156-)	1	515	554
8008-8411	BJ60,FJ60	N=37:10	#	41201-69095- (41201-69156-)	1	455	514
8504-	BJ60,HJ60,FJ60..MTM	N=37:10		41201-69156-	1	555	
8411-8504	FJ60	N=37:10			1	515	554
8510-	HJ60..ATM	N=37:9		41201-69166-	1	567	

PROD.DATE	MODELS	DESCRIPTION	R/P	PART NUMBER	QTY	REV.REF.CODE FROM	REV.REF.CODE UP TO
	43640A BEARING, FRONT AXLE DRIVE PINION, FRONT						
8008-8101	BJ60,FJ60			# 97619-30308- (90366-40004-)	1	455	
8101-	BJ60,HJ60,FJ60			90366-40004-	1		
	43640B SHIM, FRONT AXLE DRIVE PINION SPACER REAR ADJU ST						
8008-8411	BJ60,FJ60	T=0.25		90564-68001-	2	455	514
8008-8411	BJ60,FJ60	T=0.30		90564-68002-	2	455	514
8008-8411	BJ60,FJ60	T=0.35		90564-68003-	2	455	514
8008-8411	BJ60,FJ60	T=0.40		90564-68004-	2	455	514
8008-8411	BJ60,FJ60	T=0.45		90564-68005-	2	455	514
8411-8504	FJ60	T=0.25		90564-68001-	2	515	554
8411-8504	FJ60	T=0.30		90564-68002-	2	515	554
8411-8504	FJ60	T=0.35		90564-68003-	2	515	554
8411-8504	FJ60	T=0.40		90564-68004-	2	515	554
8411-8504	FJ60	T=0.45		90564-68005-	2	515	554
	43640C SPACER OR WASHER, FRONT AXLE DRIVE PINION THRU ST						
8411-8504	BJ60	T=1.05		90201-40551-	1	515	554
8411-8504	BJ60	T=1.10		90201-40552-	1	515	554
8411-8504	BJ60	T=1.15		90201-40553-	1	515	554
8411-8504	BJ60	T=1.20		90201-40554-	1	515	554
8411-8504	BJ60	T=1.25		90201-40555-	1	515	554
8411-8504	BJ60	T=1.30		90201-40556-	1	515	554
8411-8504	BJ60	T=1.35		90201-40557-	1	515	554
8411-8504	BJ60	T=1.40		90201-40558-	1	515	554
8411-8504	BJ60	T=1.45		90201-40559-	1	515	554
8411-8504	BJ60	T=1.50		90201-40560-	1	515	554
8411-8504	BJ60	T=1.55		90201-40561-	1	515	554
8008-8411	BJ60,FJ60	T=2.74-2.76		90560-30184-	1	455	514
8008-8411	BJ60,FJ60	T=2.77-2.79		90560-30185-	1	455	514
8008-8411	BJ60,FJ60	T=2.80-2.82		90560-30186-	1	455	514

PROD.DATE	MODELS	DESCRIPTION	R/P	PART NUMBER	QTY	REV.REF.CODE FROM	REV.REF.CODE UP TO
	43640C CONTINUED SPACER OR WASHER, FRONT AXLE DRIVE PINION THRU ST						
8008-8411	BJ60,FJ60	T=2.83-2.85		90560-30187-	1	455	514
8008-8411	BJ60,FJ60	T=2.86-2.88		90560-30188-	1	455	514
8008-8411	BJ60,FJ60	T=2.89-2.91		90560-30190-	1	455	514
8008-8411	BJ60,FJ60	T=2.92-2.94		90560-30191-	1	455	514
8008-8411	BJ60,FJ60	T=2.95-2.97		90560-30192-	1	455	514
8008-8411	BJ60,FJ60	T=2.98-3.00		90560-30193-	1	455	514
8504-	BJ60,HJ60,FJ60	T=1.05		90201-40551-	1	555	
8504-	BJ60,HJ60,FJ60	T=1.10		90201-40552-	1	555	
8504-	BJ60,HJ60,FJ60	T=1.15		90201-40553-	1	555	
8504-	BJ60,HJ60,FJ60	T=1.20		90201-40554-	1	555	
8504-	BJ60,HJ60,FJ60	T=1.25		90201-40555-	1	555	
8504-	BJ60,HJ60,FJ60	T=1.30		90201-40556-	1	555	
8504-	BJ60,HJ60,FJ60	T=1.35		90201-40557-	1	555	
8504-	BJ60,HJ60,FJ60	T=1.40		90201-40558-	1	555	
8504-	BJ60,HJ60,FJ60	T=1.45		90201-40559-	1	555	
8504-	BJ60,HJ60,FJ60	T=1.50		90201-40560-	1	555	
8504-	BJ60,HJ60,FJ60	T=1.55		90201-40561-	1	555	
8411-8504	FJ60	T=2.74-2.76		90560-30184-	1	515	554
8411-8504	FJ60	T=2.77-2.79		90560-30185-	1	515	554
8411-8504	FJ60	T=2.80-2.82		90560-30186-	1	515	554
8411-8504	FJ60	T=2.83-2.85		90560-30187-	1	515	554
8411-8504	FJ60	T=2.86-2.88		90560-30188-	1	515	554
8411-8504	FJ60	T=2.89-2.91		90560-30190-	1	515	554
8411-8504	FJ60	T=2.92-2.94		90560-30191-	1	515	554

PROD.DATE	MODELS	DESCRIPTION	R/P	PART NUMBER	QTY	REV.REF.CODE FROM	REV.REF.CODE UP TO
	43640C SPACER OR WASHER, FRONT AXLE DRIVE PINION THRU ST						
CONTINUED							
8411-8504	FJ60	T=2.95-2.97		90560-30192-	1	515	554
8411-8504	FJ60	T=2.98-3.00		90560-30199-	1	515	554
	43640D SHIM, FRONT AXLE DRIVE PINION SPACER FRONT ADJUST						
8008-8411	BJ60,FJ60			90564-30035-	4	455	514
8411-8504	FJ60				4	515	554
	43640E BEARING, FRONT AXLE DRIVE PINION, REAR						
8008-8101	BJ60,FJ60			97619-30306-	1	455	
8101-	BJ60,HJ60,FJ60			90366-30011-	1		
	43640F SLINGER, FRONT AXLE DRIVE PINION OIL						
8411-8504	BJ60			41214-26010--	1	515	554
8008-8210	BJ60,FJ60		#	41214-30010- (41214-40010-)	1	455	
8210-8411	BJ60,FJ60			41214-40010-	1		514
8504-	BJ60,HJ60,FJ60			41214-26010-	1	555	
8411-8504	FJ60			41214-40010-	1	515	554
	43640G SEAL, TYPE T OIL (FOR FRONT AXLE DIFFERENTIAL CARRIER)						
8008-	BJ60,HJ60,FJ60			90311-38134-	1	455	
	43640H BOLT, RING GEAR SET						
8008-	BJ60,HJ60,FJ60			41226-35010-	12	455	

GENUINE TOYOTA PARTS

PROD.DATE	MODELS	DESCRIPTION	R/P	PART NUMBER	QTY	REV.REF.CODE FROM	REV.REF.CODE UP TO

(8008-)

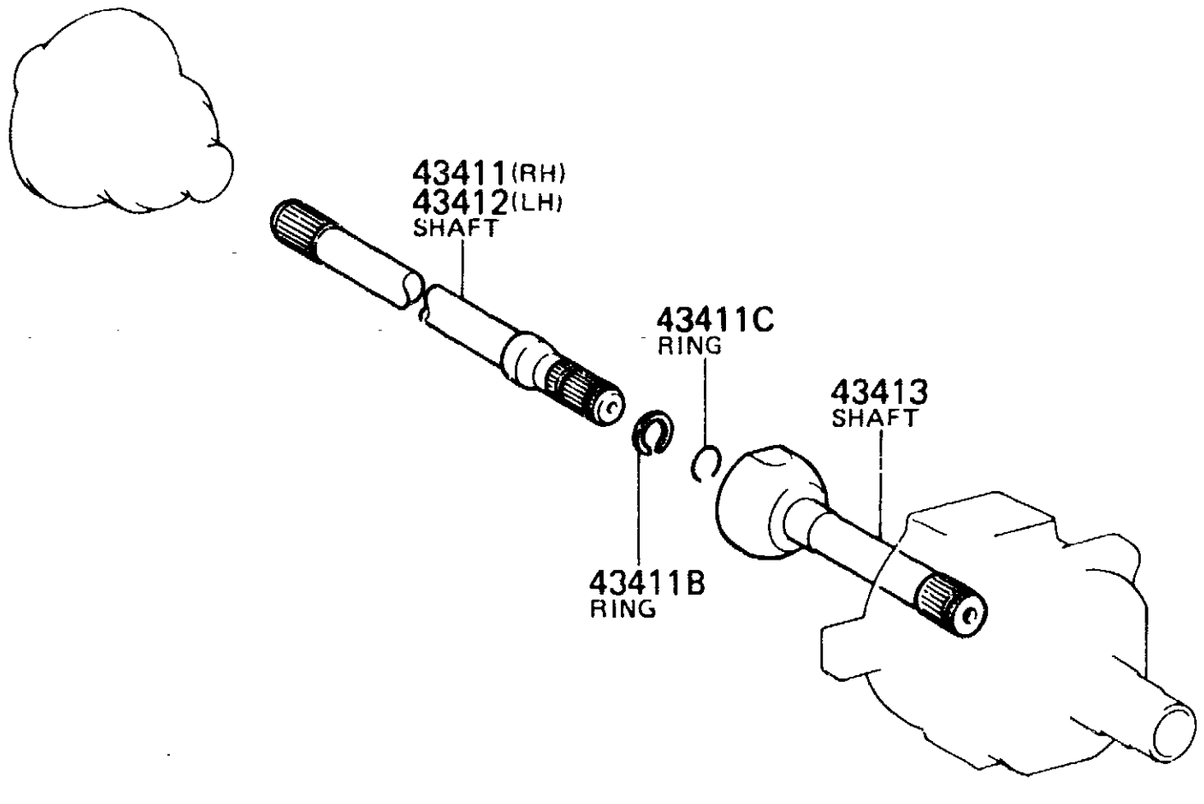

MC 8182

GENUINE TOYOTA PARTS

	PROD.DATE	MODELS	DESCRIPTION	R/P	PART NUMBER	QTY	REV.REF.CODE FROM	REV.REF.CODE UP TO
	FIG.	43-02 DRIVE SHAFT						
		43411 SHAFT, FRONT AXLE, INNER RH						
	8008-	BJ60,HJ60,FJ60			43411-60020-	1	455	
		43411B RING, SHAFT SNAP (FOR FRONT DRIVE INNER SHAFT INNER)						
	8008-	BJ60,HJ60,FJ60			90520-28036--	2	455	
		43411C RING, SHAFT SNAP (FOR FRONT DRIVE INNER SHAFT OUTER)						
	8008-	BJ60,HJ60,FJ60			90520-27091-	2	455	
		43412 SHAFT, FRONT AXLE, INNER LH						
	8008-	BJ60,HJ60,FJ60			43412-35010-	1	455	
C	8608-	HJ60	W/DIFFERENTIAL LOCK		43412-60050-	1	601	
		43413 SHAFT, DRIVE						
	8008-8512	BJ60,HJ60,FJ60		*	43405-60015-- (43405-60016-)	2	455	
	8512-	HJ60,FJ60			43405-60016-	2		

(8008-)

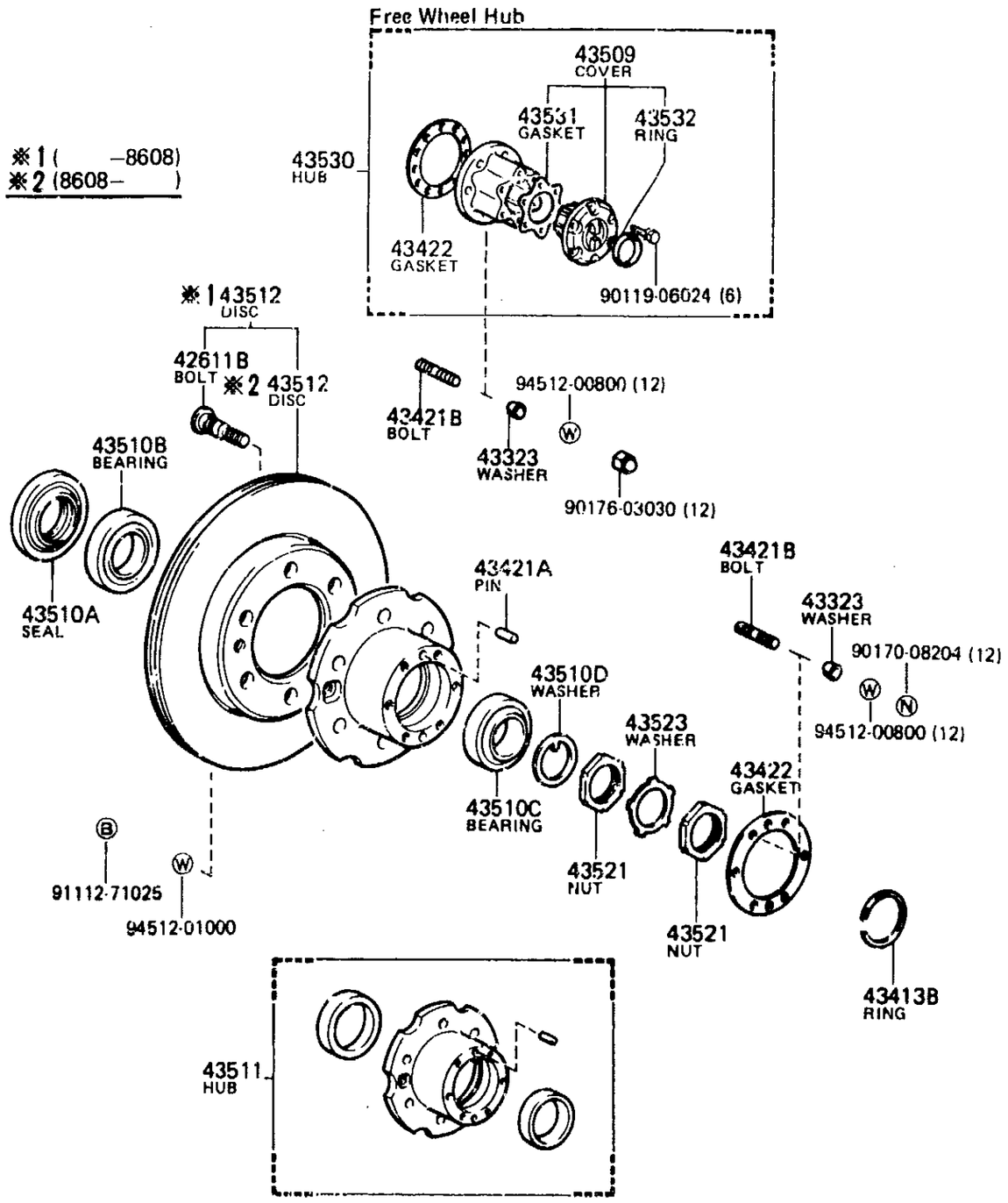

GENUINE TOYOTA PARTS

PROD.DATE	MODELS	DESCRIPTION	R/P	PART NUMBER	QTY	REV.REF.CODE FROM	REV.REF.CODE UP TO
FIG•	43-03 FRONT AXLE HUB						
	42611B | BOLT, HUB (FOR FRONT AXLE)						
8008-8411	BJ60,FJ60			# 90942-02044- (90942-02053-)	12	455	514
8411-	BJ60,HJ60,FJ60			90942-02053-	12	515	
	43323 | WASHER, CONE (FOR FRONT AXLE SHAFT)						
8008-	BJ60,HJ60,FJ60			42323-60010-	12	455	
	43413B | RING, DRIVE SHAFT SNAP						
8008-	BJ60,HJ60,FJ60			90520-31001-	2	455	
	43421A | PIN, STRAIGHT (FOR OUTER SHAFT FLANGE)						
8008-	BJ60,HJ60,FJ60			90250-07057-	4	455	
	43421B | BOLT, STUD (FOR OUTER SHAFT FLANGE)						
8008-	BJ60,HJ60,FJ60			90116-08325-	12	455	
	43422 | GASKET, FRONT AXLE OUTER SHAFT FLANGE						
8411-8504	BJ60			43422-60020-	2	515	554
8008-8411	BJ60,FJ60			43422-60010-	2	455	514
8504-	BJ60,HJ60,FJ60			43422-60020-	2	555	
8411-8504	FJ60			43422-60010-	2	515	554
	43509 | COVER SUB-ASSY, FREE WHEEL HUB						
8008-8110	BJ60,FJ60			43509-60013-	2	455	458
8110-	BJ60,HJ60,FJ60			43509-60015-	2	459	
	43510A | SEAL, OIL (FOR FRONT AXLE HUB)						
8008-	BJ60,HJ60,FJ60			90311-62001-	2	455	
	43510B | BEARING, TAPERED ROLLER (FOR FRONT AXLE INNER BEARING)						
8008-	BJ60,HJ60,FJ60			90368-49084-	2	455	
	43510C | BEARING, TAPERED ROLLER (FOR FRONT AXLE OUTER BEARING)						
8008-	BJ60,HJ60,FJ60			90368-45087-	2	455	

	PROD.DATE	MODELS	DESCRIPTION	R/P	PART NUMBER	QTY	REV.REF.CODE FROM	REV.REF.CODE UP TO
		43510D WASHER, CLAW (FOR STEERING KNUCKLE WASHER)						
	8008-	BJ60,HJ60,FJ60			90214-42030-	2	455	
		43511 HUB, FRONT AXLE						
	8008-	BJ60,HJ60,FJ60			43502-60020-	2	455	
		43512 DISC, FRONT						
	8008-8411	BJ60,FJ60		#	43512-69015- (43512-69016-)	2	455	514
C	8411-8608	BJ60,HJ60			43512-69016-	2	515	
	8411-8504	FJ60		#	43512-69015- (43512-69016-)	2	515	554
C	8504-8608	FJ60			43512-69016-	2	555	
C	8608-	HJ60,FJ60			43512-60040-	2		
		43521 NUT, FRONT WHEEL ADJUSTING						
	8008-	BJ60,HJ60,FJ60			43521-60011-	4	455	
		43523 WASHER, FRONT WHEEL ADJUSTING LOCK						
	8008-	BJ60,HJ60,FJ60			90215-42025-	2	455	
		43530 HUB ASSY, FREE WHEEL						
	8411-8504	BJ60			43530-69045-	2	515	554
	8008-8110	BJ60,FJ60			43530-69016-	2	455	458
	8110-8411	BJ60,FJ60			43530-69017-	2	459	514
	8504-	BJ60,HJ60,FJ60			43530-69045-	2	555	
	8411-8504	FJ60			43530-69017-	2	515	554
		43531 GASKET, FREE WHEEL HUB						
	8008-	BJ60,HJ60,FJ60			43531-60010-	2	455	
		43532 RING, FREE WHEEL HUB						
	8110-	BJ60,HJ60,FJ60			43532-60010-	1	455	

FIG•45-01 STEERING COLUMN & GEAR HOUSING

2-J10

MR4-11-0445

(8008-)

(8008-8210)CND

ILLUST•NO• 1OF3

ILLUST•NO• 2OF3

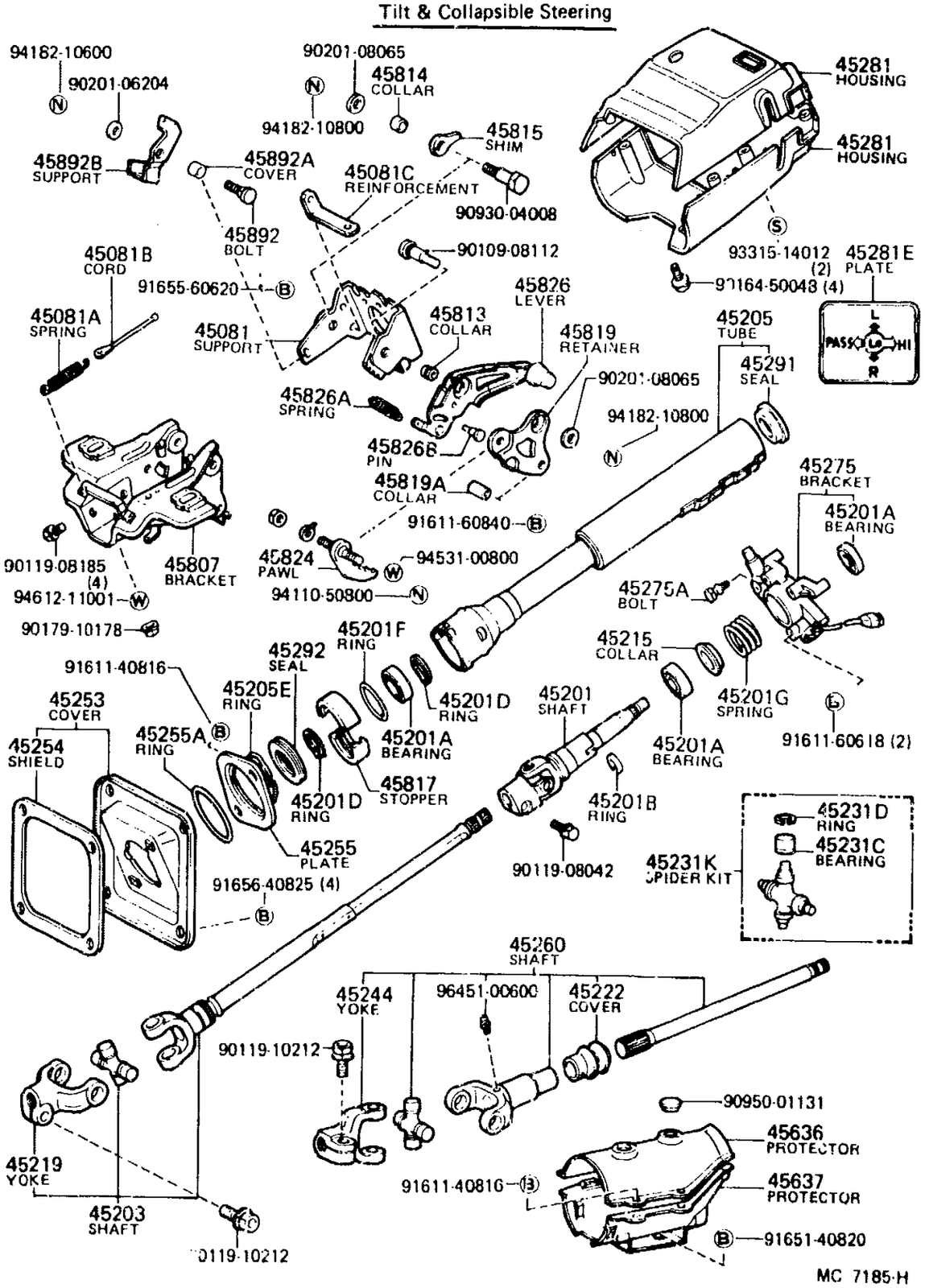

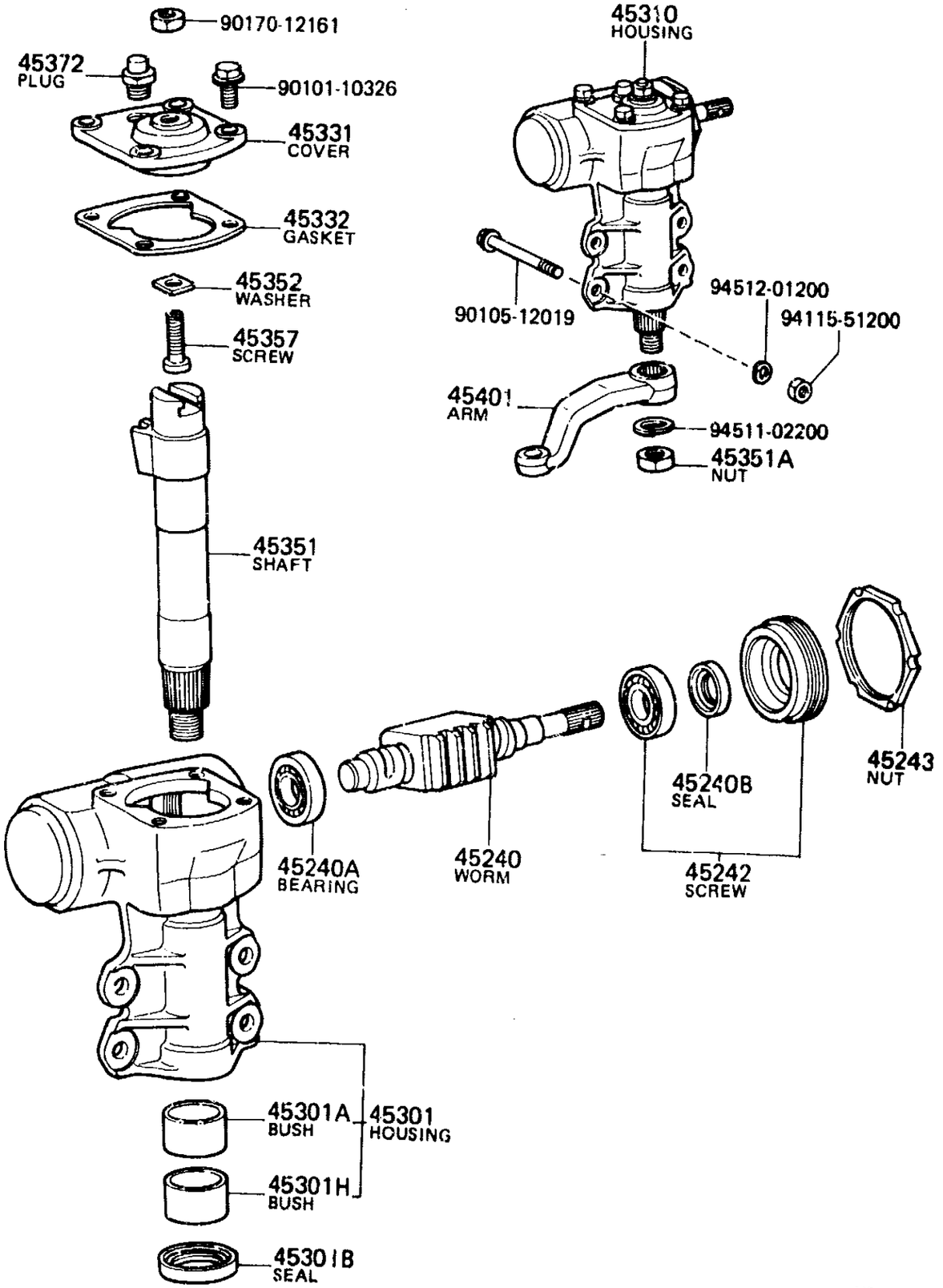

MC7185H

MC7187A

(8008-8504)FJ60; (8210-8411)BJ60

ILLUST.NO. 2OF3

POWER STEERING

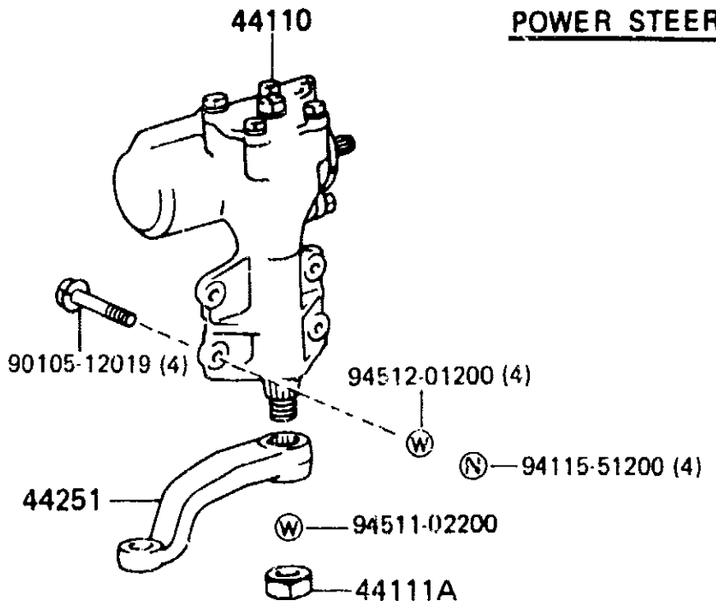

44110K

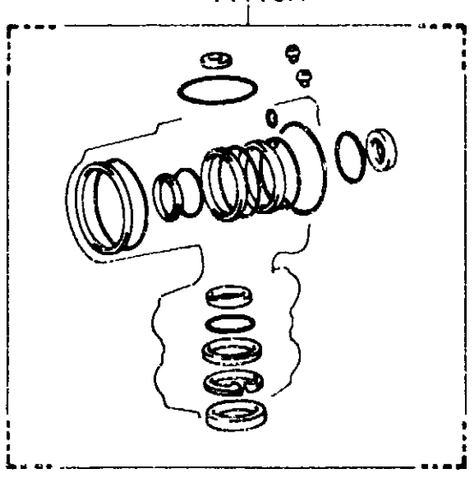

44111K

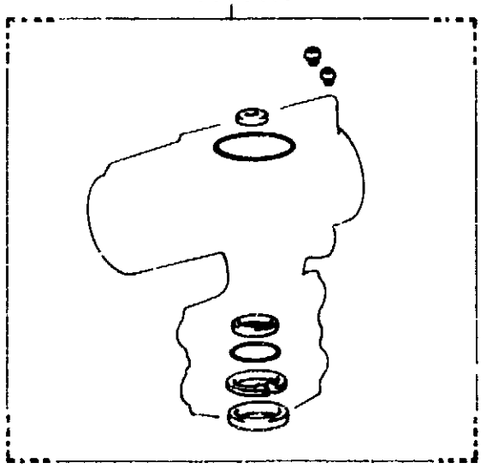

44101K

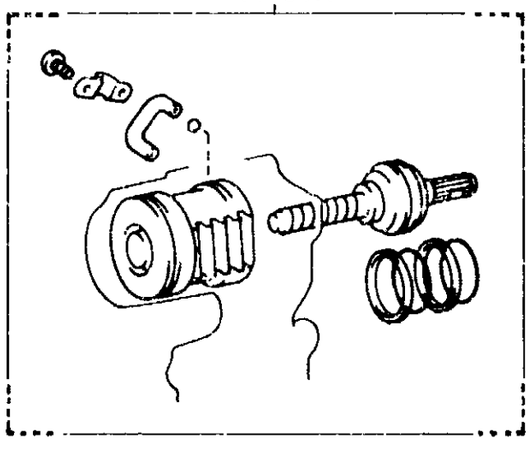

(8411-8510)BJ60; (8504-)FJ60; (8510-)HJ60

ILLUST.NO. 2OF3

W/ Power Steering

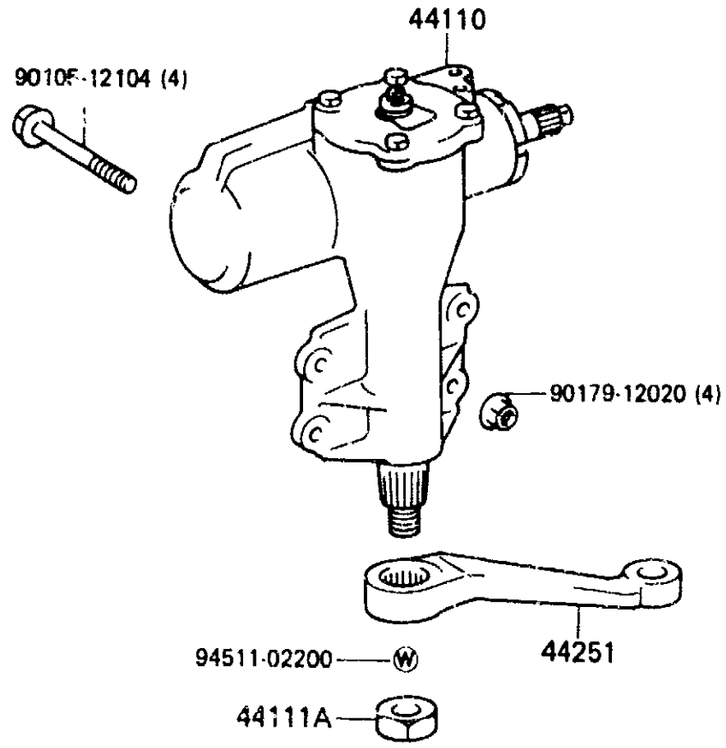

44110K

44111K

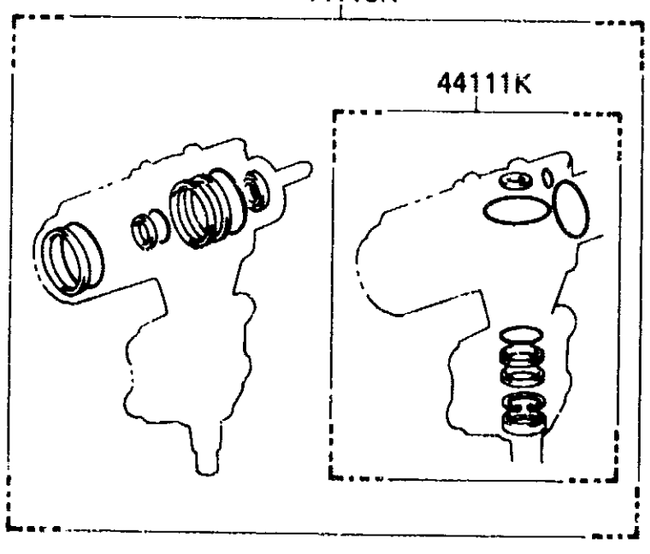

44101K

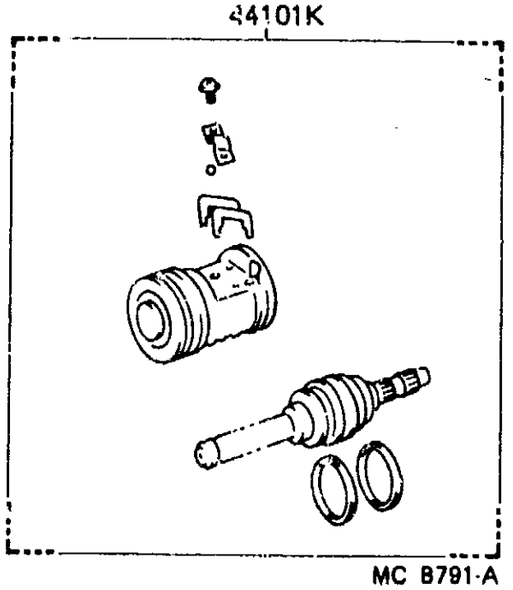

MC B791-A

MC 7190-E

FIG.45-01 STEERING COLUMN & GEAR HOUSING

2-L10

MR4-11-0447

(8008-8504)FJ60; (8210-8411)BJ60

ILLUST.NO. 3OF3

POWER STEERING

※1(　　-8212)
※2(8212-　　)

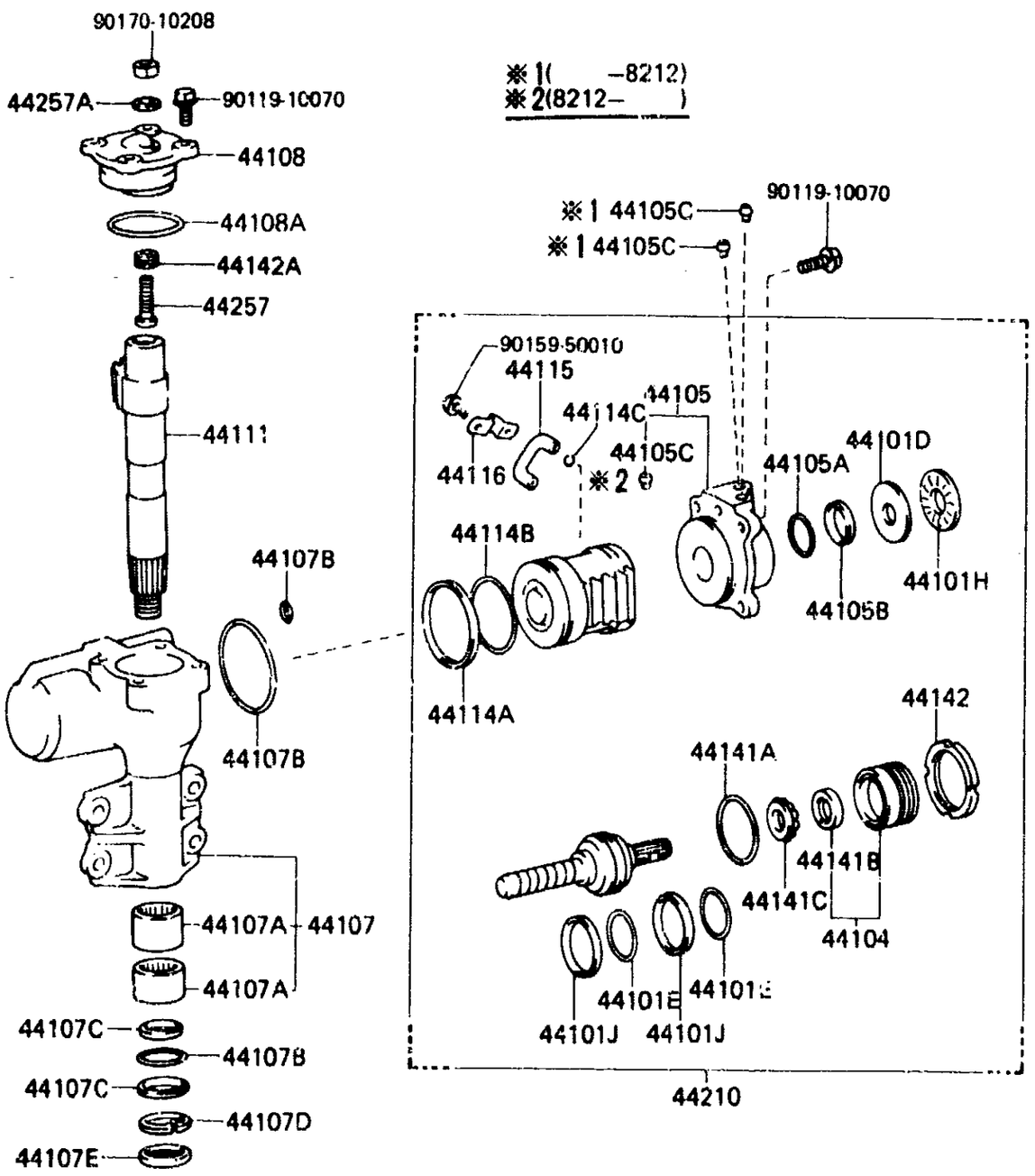

MC A723-A

(8411-8510)BJ60; (8504-　　)FJ60; (8510-　　)HJ60

ILLUST.NO. 3OF3

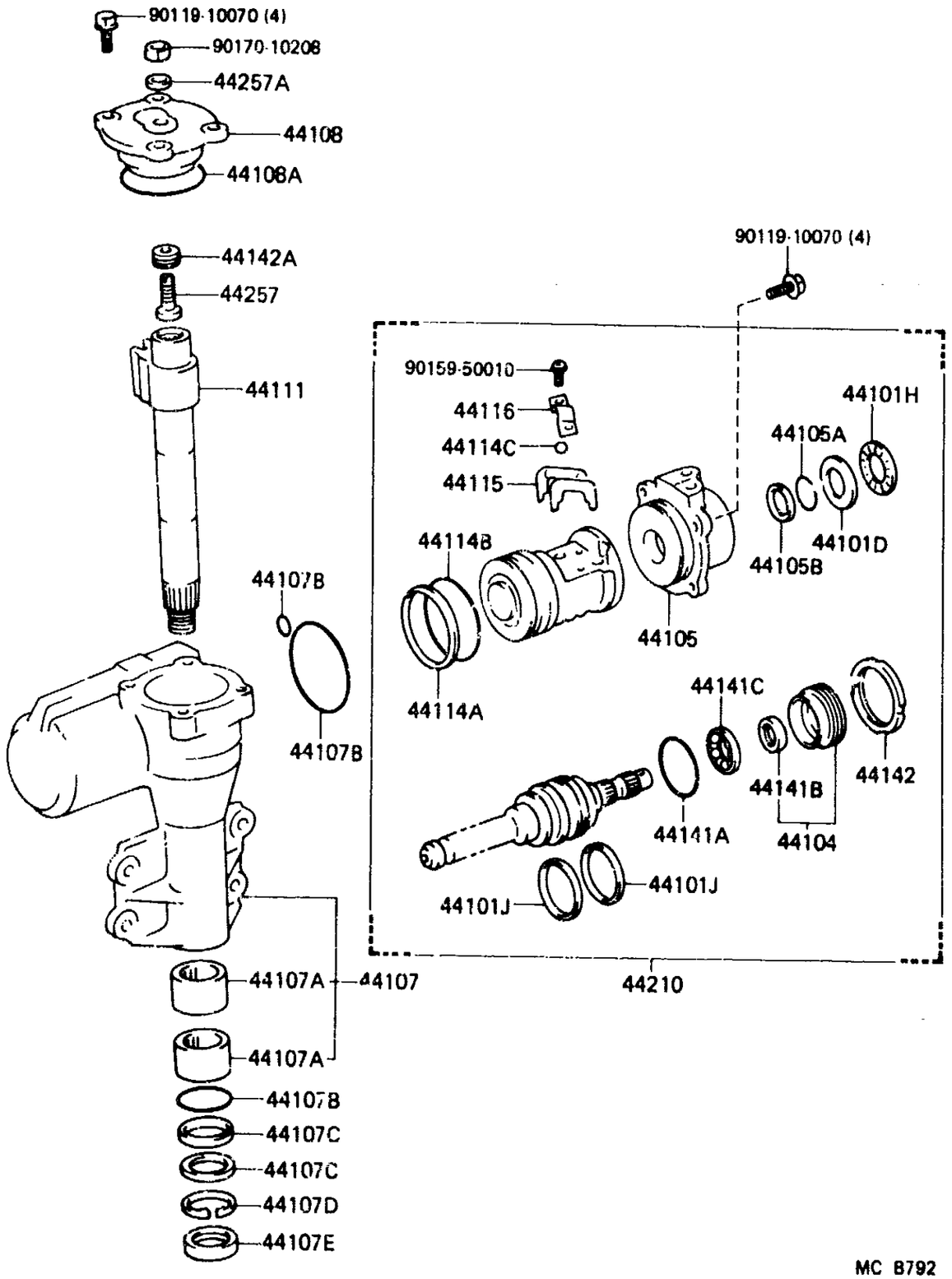

MC B792

MCA723A

MCB792

	PROD.DATE	MODELS	DESCRIPTION	R/P	PART NUMBER	QTY	REV.REF.CODE FROM	REV.REF.CODE UP TO
	FIG. 45-01 STEERING COLUMN & GEAR HOUSING							
		44101D WASHER, PLATE (FOR STEERING WORM)						
	8210-	BJ60,HJ60,FJ60			90201-30003-	1	1013	
	8008-8210	FJ60				1	455	466
		44101E RING, O (FOR STEERING WORM)						
C	8210-8411	BJ60,FJ60			90301-44001-	2	467	514
	8008-8210	FJ60				2	455	466
		44101H BEARING, THRUST NEEDLE ROLLER (FOR STEERING WORM)						
	8210-	BJ60,HJ60,FJ60			90374-30003-	1	467	
	8008-8210	FJ60				1	455	466
		44101J RING (FOR STEERING WORM)						
	8411-8504	BJ60			90562-48001-	2	515	554
	8210-8411	BJ60,FJ60			90562-47002-	2	467	514
	8504-	BJ60,HJ60,FJ60			90562-48001-	2	555	
	8008-8108	FJ60			90562-47001-	2	455	
	8108-8210	FJ60			90562-47002-	2		466
	8411-8504	FJ60				2	515	554
		44101K WORM KIT, POWER STEERING						
	8411-8504	BJ60			04044-60070-	1	515	554
	8210-8411	BJ60,FJ60			04044-60060-	1	467	514
C	8504-8604	BJ60,FJ60			04044-60070-	1	555	572
	8008-8108	FJ60			04044-60050-	1	455	
	8108-8210	FJ60			04044-60060-	1		466
	8411-8504	FJ60				1	515	554
C	8604-	FJ60				1	573	
	8510-	HJ60			04044-60110-	1	567	
		44104 PLUG SUB-ASSY, ADJUSTER						
C	8210-	BJ60,HJ60,FJ60			44104-22011-	1	467	
C	8008-8210	FJ60				1	455	466

	PROD.DATE	MODELS	DESCRIPTION	R/P	PART NUMBER	QTY	REV.REF.CODE FROM	REV.REF.CODE UP TO
		44105 HOUSING SUB-ASSY, VALVE						
	8210-8308	BJ60,FJ60			44105-30050-	1	467	
	8308-	BJ60,HJ60,FJ60			44105-30060-	1		
	8008-8210	FJ60			44105-30050-	1	455	466
		44105A RING, O (FOR VALVE HOUSING)						
	8210-	BJ60,HJ60,FJ60			90301-32002-	1	467	
	8008-8210	FJ60				1	455	466
		44105B RING (FOR VALVE HOUSING)						
	8210-	BJ60,HJ60,FJ60			90562-30002-	1	467	
	8008-8210	FJ60				1	455	466
		44105C SEAT, UNION (FOR VALVE BODY HOUSING)						
	8411-8504	BJ60			90410-06006-	2	515	554
	8210-8411	BJ60,FJ60			90410-06030-	2	467	514
	8504-	BJ60,HJ60,FJ60			90410-06006-	2	555	
	8008-8210	FJ60			90410-06030-	2	455	466
	8411-8504	FJ60				2	515	554
		44107 HOUSING SUB-ASSY, POWER STEERING GEAR						
	8411-8504	BJ60			44107-60060-	1	515	
	8210-8411	BJ60,FJ60			44107-60040-	1	467	514
	8504-	BJ60,HJ60,FJ60			44107-60060-	1		
	8008-8210	FJ60			44107-60040-	1	455	466
	8411-8504	FJ60				1	515	
		44107A BEARING, NEEDLE ROLLER (FOR POWER STEERING GEAR HOUSING)						
	8210-	BJ60,HJ60,FJ60			90364-32003-	2	467	
	8008-8210	FJ60				2	455	466
		44107B RING, O (FOR POWER STEERING GEAR HOUSING)						
	8210-	BJ60,HJ60,FJ60	OD=40.7,T=3.5		90301-33002-	1	467	
	8210-	BJ60,HJ60,FJ60	OD=70,T=2.5		90301-65145-	1	467	

PROD.DATE	MODELS	DESCRIPTION	R/P	PART NUMBER	QTY	REV.REF.CODE FROM	REV.REF.CODE UP TO
	44107B | RING, O (FOR POWER STEERING GEAR HOUSING) CONTINUED						
8210-	BJ60,HJ60,FJ60	OD=13,T=1.9		96711-19010-	1	467	
8008-8201	FJ60	OD=13,T=1.9	#	96710-01010- (96711-19010-)	1	455	
8008-8210	FJ60	OD=40.7,T=3.5		90301-33002-	1	455	466
8008-8210	FJ60	OD=70,T=2.5		90301-65145-	1	455	466
8201-8210	FJ60	OD=13,T=1.9		96711-19010-	1		466
	44107C | RING (FOR POWER STEERING GEAR HOUSING)						
8210-	BJ60,HJ60,FJ60	OD=34.1,T=4		90562-31002-	1	467	
8210-	BJ60,HJ60,FJ60	OD=40,T=3		90562-32002-	1	467	
8008-8210	FJ60	OD=34.1,T=4		90562-31002-	1	455	466
8008-8210	FJ60	OD=40,T=3		90562-32002-	1	455	466
	44107D | RING, HOLE SNAP (FOR POWER STEERING GEAR HOUSING)						
8210-	BJ60,HJ60,FJ60			90521-44002-	1	467	
8008-8210	FJ60				1	455	466
	44107E | SEAL, OIL (FOR POWER STEERING GEAR HOUSING)						
8210-	BJ60,HJ60,FJ60			90312-32002-	1	467	
8008-8210	FJ60				1	455	466
	44108 | COVER SUB-ASSY, SIDE						
8210-	BJ60,HJ60,FJ60			44108-60010-	1	467	
8008-8210	FJ60				1	455	466
	44108A | RING, O (FOR SIDE COVER)						
8210-	BJ60,HJ60,FJ60			90301-64002-	1	467	
8008-8210	FJ60				1	455	466
	44110 | GEAR ASSY, POWER STEERING						
8411-8504	BJ60		#	44110-60120- (44110-60121-)	1	515	554

PROD.DATE	MODELS	DESCRIPTION	R/P	PART NUMBER	QTY	REV.REF.CODE FROM	REV.REF.CODE UP TO
	44110 | GEAR ASSY, POWER STEERING CONTINUED						
8210-8411	BJ60,FJ60			44110-60051-	1	467	514
C 8504-8604	BJ60,FJ60		#	44110-60120- (44110-60121-)	1	555	572
8008-8108	FJ60			44110-60050-	1	455	
8108-8210	FJ60			44110-60051-	1		466
8411-8504	FJ60				1	515	554
C 8604-	FJ60			44110-60121-	1	573	
8510-	HJ60				1	567	
	44110K | GASKET KIT, POWER STEERING GEAR						
8411-8504	BJ60			04445-60030-	1	515	554
8210-8411	BJ60,FJ60			04445-60020-	1	467	514
8504-	BJ60,HJ60,FJ60			04445-60030-	1	555	
8008-8210	FJ60			04445-60020-	1	455	466
8411-8504	FJ60				1	515	554
	44111 | SHAFT, CROSS						
C 8210-8604	BJ60,FJ60			44111-60020-	1	467	572
8008-8210	FJ60				1	455	466
C 8604-	FJ60			44111-60040-	1	573	
8510-	HJ60				1	567	
	44111A | NUT, HEXAGON (FOR CROSSSHAFT TO PITMAN ARM SETTING)						
C 8008-	BJ60,HJ60,FJ60			90170-22058-	1	455	
	44111K | GASKET KIT, POWER STEERING CROSS SHAFT OVERHAUL						
8411-8504	BJ60			04455-60020-	1	515	554
8210-8411	BJ60,FJ60		#	04455-60010- (04455-60011-)	1	467	514
8504-	BJ60,HJ60,FJ60			04455-60020-	1	555	
8008-8210	FJ60		#	04455-60010- (04455-60011-)	1	455	466
8411-8504	FJ60				1	515	554

	PROD.DATE	MODELS	DESCRIPTION	R/P	PART NUMBER	QTY	REV.REF.CODE FROM	REV.REF.CODE UP TO
		44114A RING (FOR POWER PISTON NUT)						
	8210-	BJ60,HJ60,FJ60			90562-67001-	1	467	
	8008-8210	FJ60				1	455	466
		44114B RING, O (FOR POWER PISTON NUT)						
	8210-	BJ60,HJ60,FJ60			90301-63001-	1	467	
	8008-8210	FJ60				1	455	466
		44114C BALL (FOR POWER PISTON NUT)						
	8210-	BJ60,HJ60,FJ60			90360-06021-	44	467	
	8008-8210	FJ60				44	455	466
		44115 GUIDE, BALL						
C	8210-8604	BJ60,FJ60			44115-60010-	2	467	572
	8008-8210	FJ60				2	455	466
C	8604-	FJ60			44115-22020-	2	573	
	8510-	HJ60				2	567	
		44116 CLAMP, BALL GUIDE						
C	8210-8604	BJ60,FJ60			44116-60010-	1	467	572
	8008-8210	FJ60				1	455	466
C	8604-	FJ60			44116-22020-	1	573	
	8510-	HJ60				1	567	
		44141A RING, O (FOR ADJUSTER PLUG)						
	8210-	BJ60,HJ60,FJ60			90301-51001-	1	467	
	8008-8210	FJ60				1	455	466
		44141B SEAL, OIL (FOR ADJUSTER PLUG)						
	8210-	BJ60,HJ60,FJ60			90311-19002-	1	467	
	8008-8210	FJ60				1	455	466
		44141C BEARING (FOR ADJUSTER PLUG)						
	8411-8504	BJ60			90369-22004-	1	515	554
	8210-8411	BJ60,FJ60			90369-22001-	1	467	514
	8504-	BJ60,HJ60,FJ60			90369-22004-	1	555	

	PROD.DATE	MODELS	DESCRIPTION	R/P	PART NUMBER	QTY	REV.REF.CODE FROM	REV.REF.CODE UP TO
		44141C BEARING (FOR ADJUSTER PLUG) CONTINUED						
	8008-8210	FJ60			90369-22001-	1	455	466
	8411-8504	FJ60				1	515	554
		44142 NUT, LOCK						
	8210-	BJ60,HJ60,FJ60			44142-22010-	1	467	
	8008-8210	FJ60				1	455	466
		44142A NUT, LOCK, NO.1						
	8210-	BJ60,HJ60,FJ60			44143-22020-	1	467	
	8008-8210	FJ60				1	455	466
		44210 VALVE ASSY, POWER STEERING CONTROL						
	8411-8504	BJ60			44120-60050-	1	515	554
	8210-8411	BJ60,FJ60			44120-60041-	1	467	514
C	8504-8604	BJ60,FJ60			44120-60050-	1	555	572
	8008-8108	FJ60			44120-60040-	1	455	
	8108-8210	FJ60			44120-60041-	1		466
	8411-8504	FJ60				1	515	554
C	8604-	FJ60			44120-60090-	1	573	
	8510-	HJ60				1	567	
		44251 ARM, PITMAN						
	8210-	BJ60,HJ60,FJ60			45411-60090-	1	467	
	8008-8210	FJ60				1	455	466
		44257 SCREW, CROSSSHAFT ADJUSTING						
	8210-	BJ60,HJ60,FJ60			45357-22010-	1	467	
	8008-8210	FJ60				1	455	466
		44257A WASHER, SEAL (FOR CROSSSHAFT ADJUSTING SCREW)						
	8210-	BJ60,HJ60,FJ60			90210-10001-	1	467	
	8008-8210	FJ60				1	455	466
		45081 SUPPORT SUB-ASSY, TILT STEERING						
	8008-	BJ60,HJ60,FJ60			45081-22020-	1	455	

PROD.DATE	MODELS	DESCRIPTION	R/P	PART NUMBER	QTY	REV.REF.CODE FROM	REV.REF.CODE UP TO
	45081A SPRING, TENSION (FOR TILT STEERING)						
8008-	BJ60,HJ60,FJ60			90506-23009-	2	455	
	45081B CORD (FOR TILT STEERING)						
8008-	BJ60,HJ60,FJ60			90945-02034-	2	455	
	45081C REINFORCE, TILT STEERING SUPPORT						
8008-	BJ60,HJ60,FJ60			45821-22010-	1	455	
	45201 SHAFT SUB-ASSY, STEERING MAIN						
8008-	BJ60,HJ60,FJ60			45210-22050-	1	455	
	45201A BEARING,RADIAL BALL (FOR STEERING MAIN SHAFT)						
8008-	BJ60,HJ60,FJ60	UPR		90363-18001-	1	455	
8008-	BJ60,HJ60,FJ60	CTR		90363-28001-	1	455	
8008-	BJ60,HJ60,FJ60	LWR		90363-30007-	1	455	
	45201B RING, SHAFT SNAP (FOR STEERING MAIN SHAFT)						
8008-	BJ60,HJ60,FJ60			90520-17042-	1	455	
	45201D RING (FOR STEERING MAIN SHAFT)						
8008-	BJ60,HJ60,FJ60			96152-00300-	2	455	
	45201F RING, O (FOR STEERING MAIN SHAFT)						
8008-8111	BJ60,FJ60			# 96710-02045- (96711-24045-)	1	455	
8111-	BJ60,HJ60,FJ60			96711-24045-	1		
	45201G SPRING, COMPRESSION (FOR STEERING MAIN SHAFT)						
8008-	BJ60,HJ60,FJ60			9050 -45011-	1	455	
	45203 SHAFT SUB-ASSY, STEERING INTERMEDIATE, NO.2						
8008-	BJ60,HJ60,FJ60			45220-60050-	1	455	
	45205 TUBE SUB-ASSY, STEERING COLUMN						
8008-	BJ60,HJ60,FJ60			45870-60030-	1	455	

GENUINE TOYOTA PARTS

	PROD.DATE	MODELS	DESCRIPTION	R/P	PART NUMBER	QTY	REV.REF.CODE FROM	REV.REF.CODE UP TO
		45205E RING, SNAP (FOR STEERING COLUMN TUBE)						
	8008-8411	BJ60,FJ60			90521-70001- *	1	455	514
	8411-	BJ60,HJ60,FJ60			90521-01002-	1	515	
		45215 COLLAR, MAIN SHAFT BEARING THRUST						
	8008-	BJ60,HJ60,FJ60			45215-22011-	1	455	
		45219 YOKE, STEERING SLIDING						
	8008-	BJ60,HJ60,FJ60			45244-60020-	1	455	
		45222 COVER, DUST						
C	8008-8604	BJ60,FJ60			45222-60020-	1	455	572
C	8604-	FJ60			45222-60031-	1	573	
C	8510-8511	HJ60			45222-60030-	1	567	
C	8511-	HJ60			45222-60031-	1		
		45231C BEARING, UNIVERSAL JOINT SPIDER (FOR STEERING MAIN SHAFT)						
	8008-	BJ60,HJ60,FJ60			37402-10020-	8	455	
		45231D RING, HOLE SNAP (FOR STEERING MAIN SHAFT)						
	8008-	BJ60,HJ60,FJ60	T=1.20		90521-22011-	8	455	
	8008-	BJ60,HJ60,FJ60	T=1.25		90521-22012-	8	455	
	8008-	BJ60,HJ60,FJ60	T=1.30		90521-22013-	8	455	
		45231K SPIDER KIT, UNIVERSAL JOINT (FOR STEERING MAIN SHAFT)						
	8008-	BJ60,HJ60,FJ60			04371-10011-	2	455	
		45240 WORM ASSY, STEERING						
	8110-8210	BJ60			45240-60020-	1	459	466
	8008-8110	BJ60,FJ60..WGV				1	455	458
		45240A BEARING (FOR STEERING WORM)						
	8110-8210	BJ60			90363-20015-	1	459	466
	8003-8110	BJ60,FJ60..WGV				1	455	458
		45240B SEAL, OIL (FOR STEERING WORM)						
	8110-8210	BJ60			90311-19001-	1	459	466

GENUINE TOYOTA PARTS

	PROD.DATE	MODELS	DESCRIPTION	R/P	PART NUMBER	QTY	REV.REF.CODE FROM	REV.REF.CODE UP TO
		45240B SEAL, OIL (FOR STEERING WORM) CONTINUED						
	8008-8110	BJ60,FJ60..WGV			90311-19001-	1	455	458
		45242 SCREW, WORM BEARING ADJUSTING						
	8110-8210	BJ60			45305-60010-	1	459	466
	8008-8110	BJ60,FJ60..WGV				1	455	458
		45243 NUT, WORM BEARING ADJUSTING SCREW LOCK						
	8110-8210	BJ60			45243-60010-	1	1005	1012
	8008-8110	BJ60,FJ60..WGV				1	455	458
		45244 YOKE, STEERING WORM						
	8008-	BJ60,HJ60,FJ60			45244-60020-	1	455	
		45253 COVER, STEERING COLUMN HOLE						
	8008-	BJ60,HJ60,FJ60			45025-60020-	1	455	
		45254 SHIELD, STEERING COLUMN HOLE						
	8008-	BJ60,HJ60,FJ60			45254-60030-	1	455	
		45255 PLATE, STEERING COLUMN HOLE COVER						
	8008-	BJ60,HJ60,FJ60			45255-60010-	1	455	
		45255A GROMMET OR RING, O (FOR STEERING COLUMN CLAMP)						
	8008-	BJ60,HJ60,FJ60			90301-60122-	1	455	
		45260 SHAFT ASSY, STEERING INTERMEDIATE, NO.2						
C	8007-8604	BJ60,FJ60			45260-60031-	1	455	572
C	8604-	FJ60			45260-60080-	1	573	
	8510-	HJ60				1	567	
		45275 BRACKET, STEERING COLUMN, UPPER						
	8008-8209	BJ60,FJ60			# 45280-22200- (45280-60130-)	1	455	
	8209-8309	BJ60,FJ60			45280-60130-	1		486
C	8309-8608	BJ60,HJ60,FJ60			45280-22191-	1	487	600
C	8608-	HJ60,FJ60			45280-60250-	1	601	

PROD.DATE	MODELS	DESCRIPTION	R/F	PART NUMBER	QTY	REV.REF.CODE FROM	REV.REF.CODE UP TO
	45275A BOLT, HEXAGON (FOR STEERING COLUMN BRACKET)						
8008-8104	BJ60,FJ60			45897-12030-	1	455	
8104-	BJ60,HJ60,FJ60			45897-14010-	1		
	45281 HOUSING, STEERING COLUMN						
8411-8504	BJ60	UPR,SEPIA BROWN		45286-60130-16	1	515	554
8411-8504	BJ60	LWR,SEPIA BROWN		45287-60090-16	1	515	554
8008-8210	BJ60,FJ60	UPR	#	45286-60130- (45286-60130-06)	1	455	466
8008-8210	BJ60,FJ60	LWR	#	45287-60090- (45287-60090-06)	1	455	466
8210-8411	BJ60,FJ60	UPR,SHADOW GRAY		45286-60130-03	1	467	514
8210-8411	BJ60,FJ60	UPR,DARK BROWN		45286-60130-06	1	467	514
8210-8411	BJ60,FJ60	LWR,SHADOW GRAY		45287-60090-03	1	467	514
8210-8411	BJ60,FJ60	LWR,DARK BROWN		45287-60090-06	1	467	514
8504-	BJ60,HJ60,FJ60	UPR,SEPIA BROWN		45286-60130-16	1	555	
8504-	BJ60,HJ60,FJ60	LWR,SEPIA BROWN		45287-60090-16	1	555	
8411-8504	FJ60	UPR,SHADOW GRAY		45286-60130-03	1	515	554
8411-8504	FJ60	UPR,DARK BROWN		45286-60130-06	1	515	554
8411-8504	FJ60	LWR,SHADOW GRAY		45287-60090-03	1	515	554
8411-8504	FJ60	LWR,DARK BROWN		45287-60090-06	1	515	554
	45281E PLATE, SAFETY CAUTION						
8008-	BJ60,FJ60			45283-22020-	1	455	
	45291 SEAL,MAIN SHAFT UPPER DUST						
8008-	BJ60,HJ60,FJ60			45282-22010-	1	455	

GENUINE TOYOTA PARTS

PROD.DATE	MODELS	DESCRIPTION	R/P	PART NUMBER	QTY	REV.REF.CODE FROM	REV.REF.CODE UP TO
	45292 SEAL, MAIN SHAFT LOWER DUST						
8008-	BJ60,HJ60,FJ60			45292-60030-	1	.5	
	45301 HOUSING SUB-ASSY, STEERING GEAR						
8110-8210	BJ60			45301-60050-	1	459	466
8008-8110	BJ60,FJ60..WGV				1	455	458
	45301A BUSH OR BEARING, SECTOR SHAFT, NO.1						
8110-8210	BJ60			90999-73060-	1	459	466
8008-8110	BJ60,FJ60..WGV				1	455	458
	45301B SEAL, OIL (FOR SECTOR SHAFT)						
8110-8210	BJ60			90311-36104-	1	459	466
8008-8110	BJ60,FJ60..WGV				1	455	458
	45301H BUSH OR BEARING, SECTOR SHAFT, NO.2						
8110-8210	BJ60			90999-73060-	1	459	466
8008-8110	BJ60,FJ60..WGV				1	455	458
	45310 HOUSING ASSY, STEERING GEAR						
8110-8210	BJ60			45310-60060-	1	459	466
8008-8110	BJ60,FJ60..WGV				1	455	458
	45331 COVER, SECTOR SHAFT END						
8110-8210	BJ60			45304-60020-	1	459	466
8008-8110	BJ60,FJ60..WGV				1	455	458
	45332 GASKET, SECTOR SHAFT END COVER						
8110-8210	BJ60			45332-37010-	1	459	466
8008-8110	BJ60,FJ60..WGV				1	455	458
	45351 SHAFT, STEERING SECTOR						
8110-8210	BJ60			45351-60030-	1	459	466
8008-8110	BJ60,FJ60..WGV				1	455	458
	45351A NUT, HEXAGON(FOR SECTOR SHAFT TO PITMAN ARM SETTING)						
8008-8110	BJ60,FJ60..WGV			90170-22058-	1	455	458

PROD.DATE	MODELS	DESCRIPTION	R/P	PART NUMBER	QTY	REV.REF.CODE FROM	REV.REF.CODE UP TO
	45351A NUT, HEXAGON(FOR SECTOR SHAFT TO PITMAN ARM SETTING) CONTINUED						
8110-	BJ60,HJ60,FJ60			90170-22058-	1	459	
	45352 WASHER, SECTOR SHAFT THRUST						
8110-8210	BJ60	T=1.95		45352-37010-	1	459	466
8110-8210	BJ60	T=2.00		45353-37010-	1	459	466
8110-8210	BJ60	T=2.05		45354-37010-	1	459	466
8008-8110	BJ60,FJ60..WGV	T=1.95		45352-37010-	1	455	458
8008-8110	BJ60,FJ60..WGV	T=2.00		45353-37010-	1	455	458
8008-8110	BJ60,FJ60..WGV	T=2.05		45354-37010-	1	455	458
	45357 SCREW, SECTOR SHAFT ADJUSTING						
8110-8210	BJ60			45357-36010-	1	459	466
8008-8110	BJ60,FJ60..WGV				1	455	458
	45372 PLUG, STEERING GEAR HOUSING OIL						
8110-8210	BJ60			90930-03058-	1	459	466
8008-8110	BJ60,FJ60..WGV				1	455	458
	45401 ARM SUB-ASSY, PITMAN						
8110-8210	BJ60			45411-60090-	1	459	466
8008-8110	BJ60,FJ60..WGV				1	455	458
	45636 PROTECTOR, INTERMEDIATE LINK JOINT, UPPER						
8110-8210	BJ60			45636-60020-	1	459	466
C 8210-8604	BJ60,FJ60	W/POWER STEERING		45636-60040-	1	459	572
8008-8110	BJ60,FJ60..WGV			45636-60020-	1	455	458
8008-8210	FJ60	W/POWER STEERING		45636-60040-	1	455	466
C 8604-	FJ60	W/POWER STEERING		45636-60040-	1	573	
8510-	HJ60	W/POWER STEERING		45636-60080-	1	567	
	45637 PROTECTOR, INTERMEDIATE LINK JOINT, LOWER						
8110-8210	BJ60			45637-60030-	1	459	466

	PROD.DATE	MODELS	DESCRIPTION	R/P	PART NUMBER	QTY	REV.REF.CODE FROM	REV.REF.CODE UP TO
		45637 PROTECTOR, INTERMEDIATE LINK JOINT, LOWER CONTINUED						
C	8210-8604	BJ60,FJ60	W/POWER STEERING		45637-60040-	1	467	572
	8008-8110	BJ60,FJ60,,WGV			45637-60030-	1	455	458
	8008-8210	FJ60	W/POWER STEERING A		45637-60040-	1	455	466
C	8604-	FJ60			45637-60060-	1	573	
	8510-	HJ60	W/POWER STEERING			1	567	
		45807 BRACKET SUB-ASSY, STEERING COLUMN UPPER SUPPORT T						
	8008-	BJ60,HJ60,FJ60			45082-60010-	1	455	
		45813 COLLAR, TILT STEERING SUPPORT, NO.1						
	8008-	BJ60,HJ60,FJ60	D=17.996-18.003		45813-22010-	1	455	
	8008-	BJ60,HJ60,FJ60	D=18.003-18.010		45813-22020-	1	455	
	8008-	BJ60,HJ60,FJ60	D=18.010-18.017		45813-22030-	1	455	
	8008-	BJ60,HJ60,FJ60	D=18.017-18.024		45813-22040-	1	455	
C	8411-	BJ60,HJ60,FJ60	D=17.989-17.996		45813-22050-	1	515	
		45814 COLLAR, TILT STEERING SUPPORT, NO.2						
	8008-	BJ60,HJ60,FJ60	D=17.982-18.000		45814-22010-	1	455	
	8008-	BJ60,HJ60,FJ60	D=18.000-18.018		45814-22020-	1	455	
		45815 SHIM, TILT STEERING SUPPORT						
	8008-	BJ60,HJ60,FJ60	T=0.2		45815-22060-	2	455	
	8008-	BJ60,HJ60,FJ60	T=0.5		45815-22070-	2	455	
	8008-	BJ60,HJ60,FJ60	T=0.8		45815-22080-	2	455	
	8008-	BJ60,HJ60,FJ60	T=1.4		45815-22090-	2	455	
	8008-	BJ60,HJ60,FJ60	T=1.8		45815-22100-	2	455	
		45817 STOPPER, STEERING SHAFT THRUST						
	8008-	BJ60,HJ60,FJ60			45817-60010-	2	455	

GENUINE TOYOTA PARTS

PROD.DATE	MODELS	DESCRIPTION	R/P	PART NUMBER	QTY	REV.REF.CODE FROM	REV.REF.CODE UP TO
	45819 RETAINER, TILT LEVER						
8008-	BJ60,HJ60,FJ60			45819-22011-	1	455	
	45819A COLLAR (FOR TILT LEVER RETAINER)						
8008-	BJ60,HJ60,FJ60			90387-08002-	1	455	
	45824 PAWL, TILT STEERING						
8008-	BJ60,HJ60,FJ60			45890-22050-	1	455	
	45826 LEVER, STEERING TILT						
8008-	BJ60,HJ60,FJ60			45804-22010-	1	455	
	45826A SPRING, TENSION (FOR STEERING TILT LEVER)						
8008-	BJ60,HJ60,FJ60			90507-14001-	1	455	
	45826B PIN (FOR STEERING TILT LEVER)						
8008-	BJ60,HJ60,FJ60			72538-12010-	1	455	
	45892 BOLT, TILT STEERING SUPPORT STOPPER						
8008-	BJ60,HJ60,FJ60			45898-22010-	1	455	
	45892A COVER, TILT STEERING SUPPORT STOPPER						
8008-	BJ60,HJ60,FJ60			45899-22020-	1	455	
	45892B SUPPORT, TILT STEERING COLUMN COVER						
8008-	BJ60,HJ60,FJ60			45289-22020-	1	455	

FIG.45-02 VANE PUMP & RESERVOIR

2-G11

MR4-11-0448

(8008-)FJ60; (8210-8411)BJ60

(8411-8510)BJ60

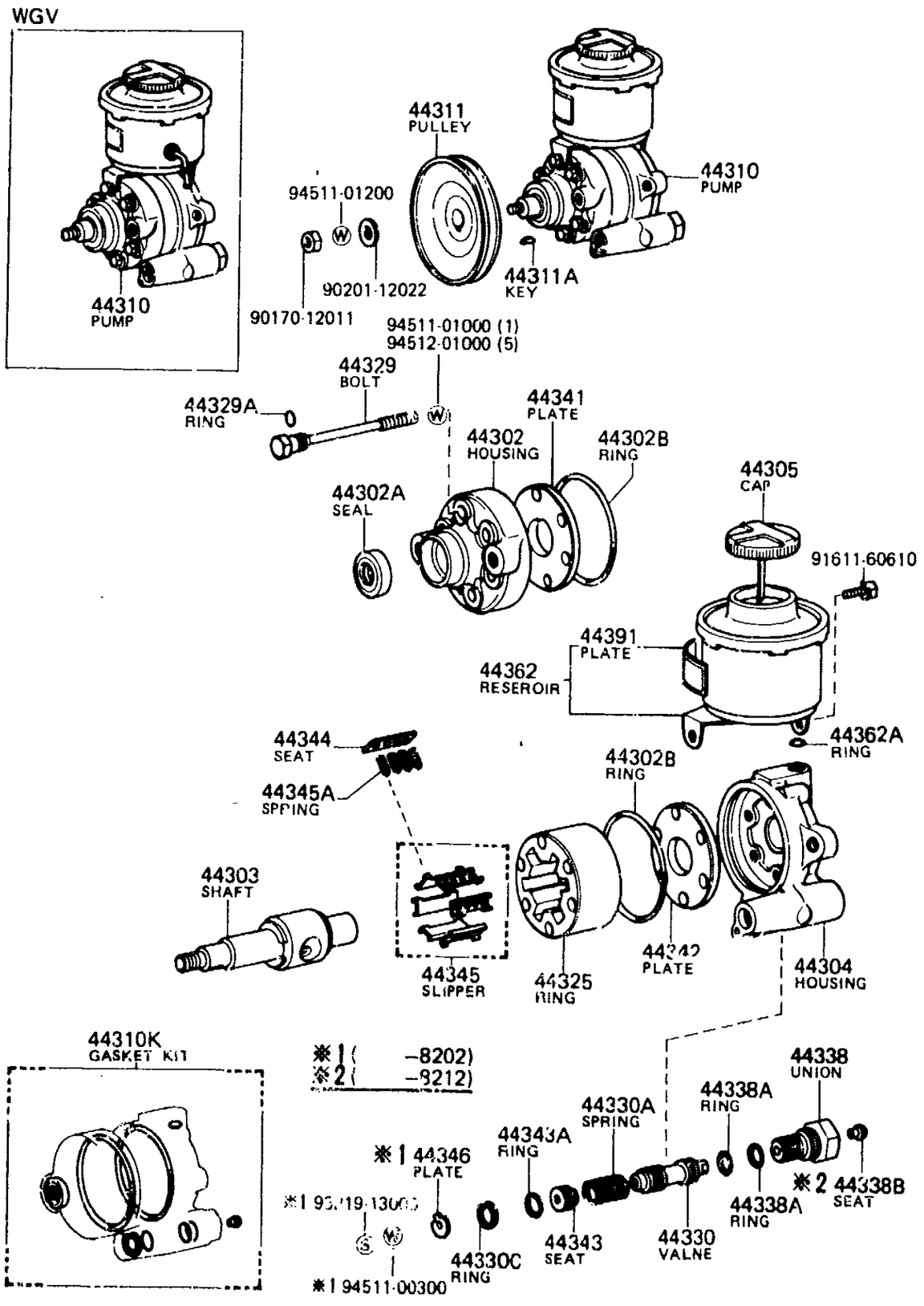

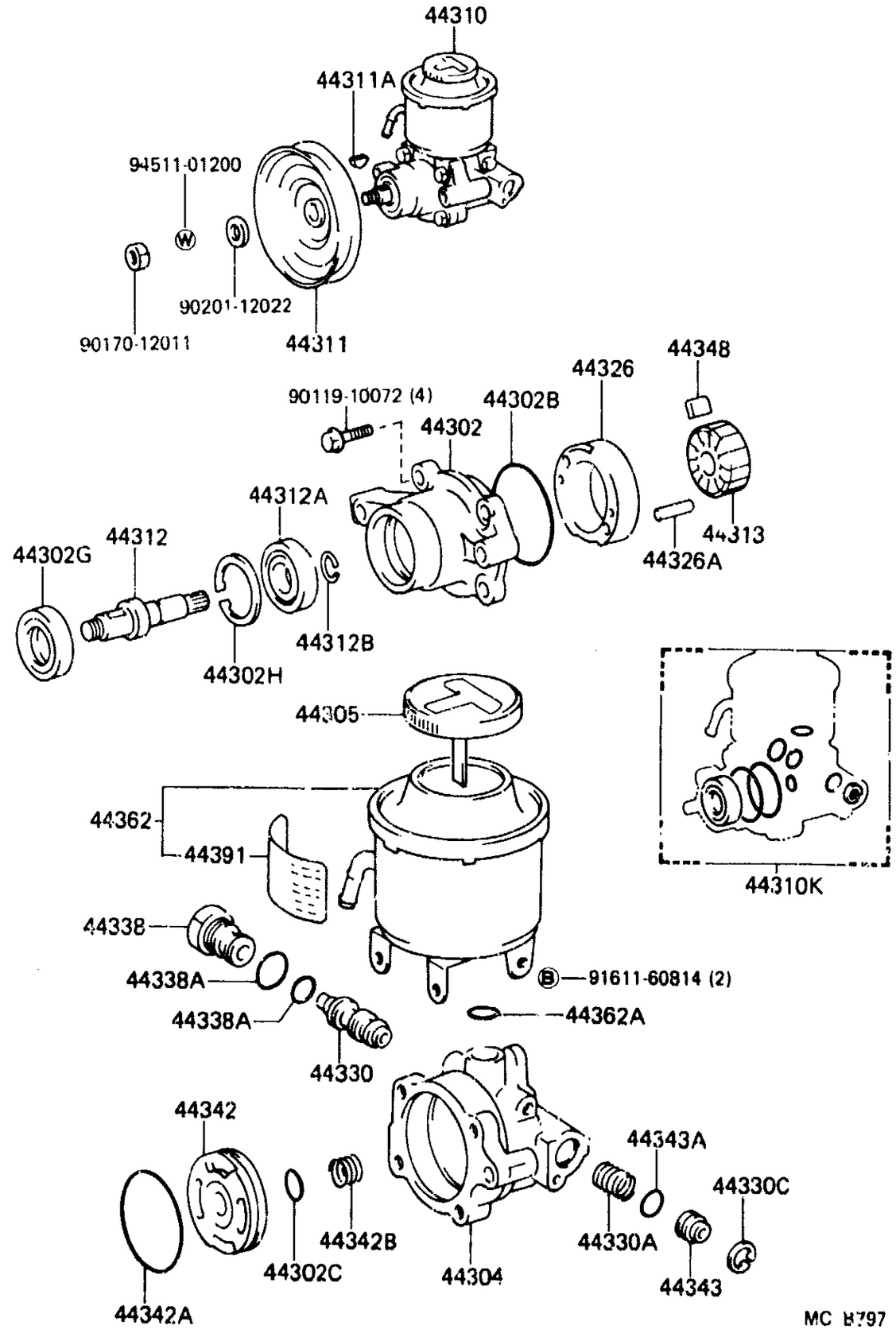

MC7191D

MC8797

FIG•45-02 VANE PUMP & RESERVOIR

2-H11

MR4-13-0241

(8510-)HJ60

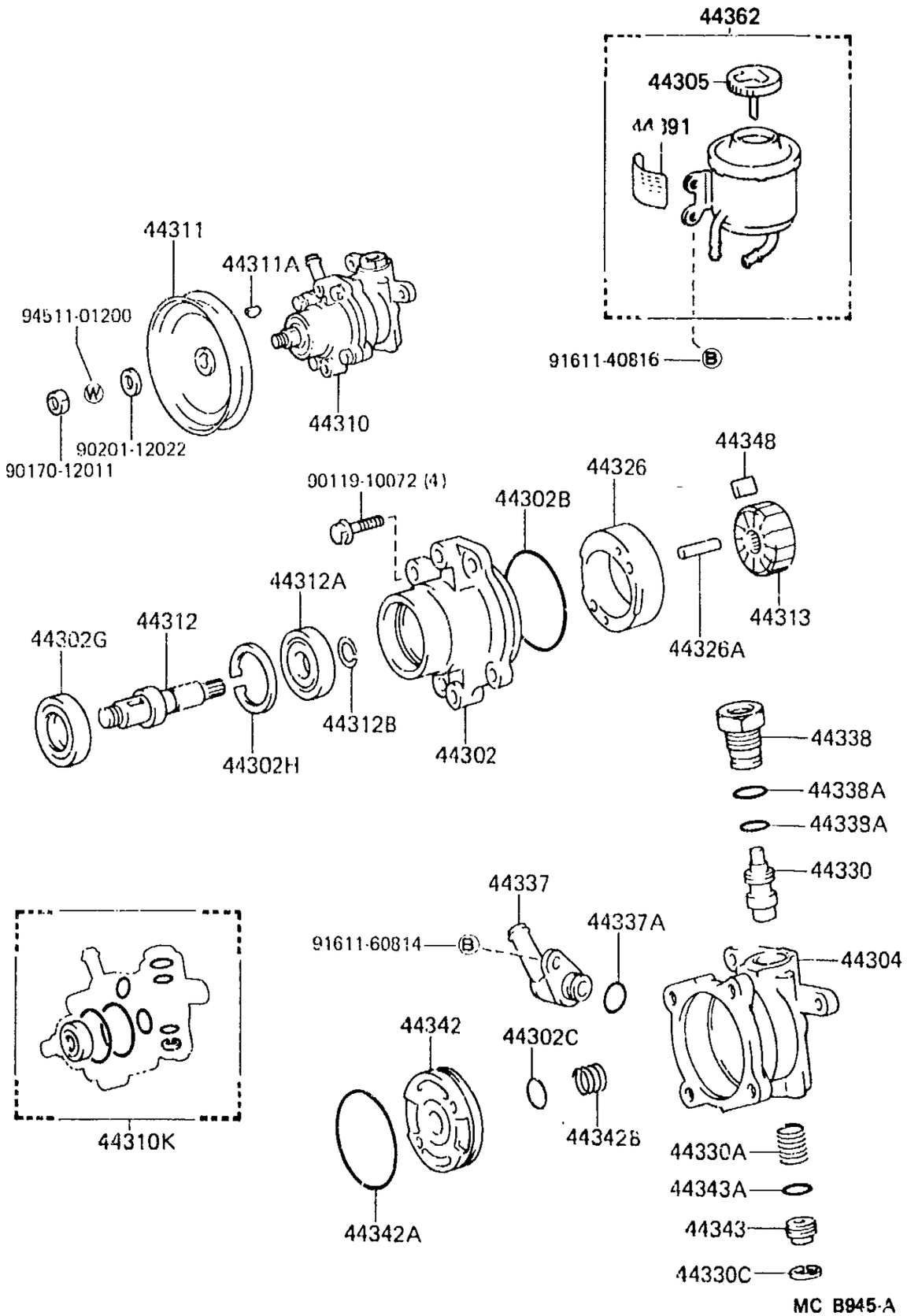

MC B945-A

GENUINE TOYOTA PARTS

PROD.DATE	MODELS	DESCRIPTION	R/P	PART NUMBER	QTY	REV.REF.CODE FROM	REV.REF.CODE UP TO
FIG•	45-02 VANE PUMP & RESERVOIR						
	44302 HOUSING SUB-ASSY, PUMP, FRONT						
8411-8510	BJ60			44302-14010-	1	515	566
8210-8411	BJ60,FJ60			44302-30020-	1	467	514
8008-8210	FJ60				1	455	466
8411-	FJ60				1	515	
8510-	HJ60			44302-12010-	1	567	
	44302A SEAL, TYPE S OIL (FOR PUMP HOUSING)						
8210-8411	BJ60,FJ60			90310-21034-	1	467	514
8008-8210	FJ60				1	455	466
8411-	FJ60				1	515	
	44302B RING, O (FOR PUMP HOUSING)						
8210-8411	BJ60,FJ60			90301-69170-	2	467	514
8411-	BJ60,HJ60			90301-60001-	1	515	
8008-8210	FJ60			90301-69170-	2	455	466
8411-	FJ60				2	467	
	44302C RING, O (FOR PUMP HOUSING)						
8411-	BJ60,HJ60			96711-19016-	1	515	
	44302G SEAL, TYPE T OIL (FOR PUMP HOUSING)						
8411-	BJ60,HJ60			90311-24001-	1	515	
	44302H RING, HOLE SNAP (FOR PUMP HOUSING OIL SEAL)						
8411-	BJ60,HJ60			90521-44002-	1	515	
	44303 SHAFT SUB-ASSY, W/ROTOR						
8210-8411	BJ60,FJ60	L=39.9750-39.9775		44303-22011-	1	467	514
8210-8411	BJ60,FJ60	L=39.9725-39.9750		44303-22021-	1	467	514
8008-8210	FJ60	L=39.9750-39.9775		44303-22011-	1	455	466
8008-8210	FJ60	L=39.9725-39.9750		44303-22021-	1	455	466

GENUINE TOYOTA PARTS

PROD.DATE	MODELS	DESCRIPTION	R/P	PART NUMBER	QTY	REV.REF.CODE FROM	REV.REF.CODE UP TO
	44303 SHAFT SUB-ASSY, W/ROTOR CONTINUED						
8411-	FJ60	L=39.9750-39.9775		44303-22011-	1	515	
8411-	FJ60	L=39.9725-39.9750		44303-22021-	1	515	
	44304 HOUSING SUB-ASSY, PUMP, REAR						
8411-8510	BJ60			44304-60020-	1	515	566
8210-8411	BJ60,FJ60			44304-30022-	1	467	514
8008-8210	FJ60				1	455	466
8411-	FJ60				1	515	
8510-	HJ60			44304-35040-	1	567	
	44305 CAP SUB-ASSY, RESERVOIR						
8210-8411	BJ60			44305-60010-	1	467	514
8411-	BJ60,HJ60			44305-30020-	1	515	
8008-	FJ60				1	455	
	44310 PUMP ASSY, VANE						
8210-8411	BJ60			44320-60080-	1	467	514
8411-8510	BJ60			44320-60090-	1	515	566
8008-8012	FJ60••WGG			44320-60040-	1	455	
8012-8108	FJ60••WGG			44320-60070-	1		
8108-	FJ60••WGG			44320-60071-	1		
8008-8012	FJ60••WGV			44320-60030-	1	455	
8012-8108	FJ60••WGV			44320-60060-	1		
8108-8110	FJ60••WGV			44320-60061-	1		458
8510-	HJ60			44320-60110-	1	567	
	44310K GASKET KIT, POWER STEERING PUMP						
8210-8411	BJ60,FJ60			04446-30010-	1	467	514
8411-	BJ60,HJ60			04446-35010-	1	515	
8008-8210	FJ60			04446-30010-	1	455	466
8411-	FJ60				1	515	

PROD.DATE	MODELS	DESCRIPTION	R/P	PART NUMBER	QTY	REV.REF.CODE FROM	REV.REF.CODE UP TO
	44311 PULLEY, VANE PUMP						
8210-8411	BJ60			44311-60040-	1	467	514
8411-8510	BJ60			44311-60050-	1	515	566
8008-	FJ60			44311-60010-	1	455	
8510-	HJ60			44311-60030-	1	567	
	44311A KEY, VANE PUMP PULLEY						
8210-	BJ60,HJ60,FJ60			90280-05008-	1	467	
8008-8210	FJ60				1	455	466
	44312 SHAFT, VANE PUMP						
8411-	BJ60,HJ60			44312-12010-	1	515	
	44312A BEARING (FOR VANE PUMP SHAFT)						
8411-	BJ60,HJ60			90363-17004-	1	515	
	44312B RING, SHAFT SNAP						
8411-	BJ60,HJ60			90520-15001-	1	515	
	44313 ROTOR, VANE PUMP						
8411-	BJ60,HJ60	NO MARK		44313-12010-	1	515	
8411-	BJ60,HJ60	MARK 1		44313-12020-	1	515	
8411-	BJ60,HJ60	MARK 2		44313-12030-	1	515	
8411-	BJ60,HJ60	MARK 3		44313-12040-	1	515	
8411-	BJ60,HJ60	MARK 4		44313-12050-	1	515	
	44325 RING, FIXED (FOR VANE PUMP)						
8210-8411	BJ60,FJ60	L=39.9950-39.9975		44325-30030-	1	467	514
8210-8411	BJ60,FJ60	L=39.9975-40.0000		44325-30040-	1	467	514
8008-8210	FJ60	L=39.9950-39.9975		44325-30030-	1	455	466
8008-8210	FJ60	L=39.9975-40.0000		44325-30040-	1	455	466
8411-	FJ60	L=39.9950-39.9975		44325-30030-	1	515	

GENUINE TOYOTA PARTS

PROD.DATE	MODELS	DESCRIPTION	R/P	PART NUMBER	QTY	REV.REF.CODE FROM	REV.REF.CODE UP TO
	44325 RING, FIXED (FOR VANE PUMP) CONTINUED						
8411-	FJ60	L=39.9975-40.0000		44325-30040-	1	515	
	44326 RING, CAM (FOR VANE PUMP)						
8411-	BJ60,HJ60	NO MARK		44325-12010-	1	515	
8411-	BJ60,HJ60	MARK 1		44325-12020-	1	515	
8411-	BJ60,HJ60	MARK 2		44325-12030-	1	515	
8411-	BJ60,HJ60	MARK 3		44325-12040-	1	515	
8411-	BJ60,HJ60	MARK 4		44325-12050-	1	515	
	44326A PIN, STRAIGHT (FOR CAM RING)						
8411-	BJ60,HJ60			90250-05008-	1	515	
	44329 BOLT, VANE PUMP FRONT HOUSING AND REAR HOUSING SET						
8210-8411	BJ60,FJ60	L=76.5		44329-30010-	5	467	514
8210-8411	BJ60,FJ60	L=78.5		44329-30020-	1	467	514
8008-8210	FJ60	L=76.5		44329-30010-	5	455	466
8008-8210	FJ60	L=78.5		44329-30020-	1	455	466
8411-	FJ60	L=76.5		44329-30010-	5	467	
8411-	FJ60	L=78.5		44329-30020-	1	467	
	44329A RING, O (FOR VANE PUMP HOUSING SET BOLT)						
8210-8411	BJ60,FJ60			96711-19007-	6	467	514
8008-8201	FJ60			# 96710-01007- (96711-19007-)	6	455	
8201-8210	FJ60			96711-19007-	6		466
8411-	FJ60				6	515	
	44330 VALVE ASSY, FLOW CONTROL						
8210-8411	BJ60,FJ60	MARK A		44330-60010-	1	467	514
8210-8411	BJ60,FJ60	MARK B		44330-60020-	1	467	514
8210-8411	BJ60,FJ60	MARK C		44330-60030-	1	467	514
8210-8411	BJ60,FJ60	MARK D		44330-60040-	1	467	514
8210-8411	BJ60,FJ60	MARK E		44330-60050-	1	467	514
8210-8411	BJ60,FJ60	MARK F		44330-60060-	1	467	514

GENUINE TOYOTA PARTS

PROD.DATE	MODELS	DESCRIPTION	R/P	PART NUMBER	QTY	REV.REF.CODE FROM	REV.REF.CODE UP TO
	44330 VALVE ASSY, FLOW CONTROL CONTINUED						
8411-	BJ60,HJ60	MARK A		44330-30100-	1	515	
8411-	BJ60,HJ60	MARK B		44330-30110-	1	515	
8411-	BJ60,HJ60	MARK C		44330-30120-	1	515	
8411-	BJ60,HJ60	MARK D		44330-30130-	1	515	
8411-	BJ60,HJ60	MARK E		44330-30140-	1	515	
8411-	BJ60,HJ60	MARK F		44330-30150-	1	515	
8008-8210	FJ60	MARK A		44330-60010-	1	455	466
8008-8210	FJ60	MARK B		44330-60020-	1	455	466
8008-8210	FJ60	MARK C		44330-60030-	1	455	466
8008-8210	FJ60	MARK D		44330-60040-	1	455	466
8008-8210	FJ60	MARK E		44330-60050-	1	455	466
8008-8210	FJ60	MARK F		44330-60060-	1	455	466
8411-	FJ60	MARK A		44330-60010-	1	515	
8411-	FJ60	MARK B		44330-60020-	1	515	
8411-	FJ60	MARK C		44330-60030-	1	515	
8411-	FJ60	MARK D		44330-60040-	1	515	
8411-	FJ60	MARK E		44330-60050-	1	515	
8411-	FJ60	MARK F		44330-60060-	1	515	
	44330A SPRING, COMPRESSION (FOR FLOW CONTROL VALVE)						
8210-	BJ60,HJ60,FJ60			90501-12447-	1	467	
8008-8210	FJ60				1	455	466
	44330C RING, SNAP (FOR FLOW CONTROL VALVE)						
8210-	BJ60,HJ60,FJ60			96151-01700-	1	467	
8008-8210	FJ60				1	455	466
	44337 UNION, SUCTION PORT						
8510-	HJ60			44337-60020-	1	567	
	44337A RING, O (FOR SUCTION PORT UNION)						
8510-	HJ60			96711-19013-	1	567	

PROD.DATE	MODELS	DESCRIPTION	R/P	PART NUMBER	QTY	REV.REF.CODE FROM	REV.REF.CODE UP TO
	44338 UNION, PRESSURE PORT						
8210-8212	BJ60,FJ60			44338-60020-	1	467	
8212-8411	BJ60,FJ60			44308-60010-	1		514
8411-	BJ60,HJ60			44308-35030-	1	515	
8008-8210	FJ60			44338-60020-	1	455	466
8411-	FJ60			44308-60010-	1	515	
	44338A RING, O (FOR PRESSURE PORT UNION)						
8210-8411	BJ60,FJ60			96711-19014-	2	467	514
8411-	BJ60,HJ60	OD=25.5		90301-22001-	1	515	
8008-8201	FJ60		*	96710-01014-	2	455	
8201-8210	FJ60			96711-19014-	2		466
8411-	HJ60,FJ60	OD=17.6			2	515	
	44338B SEAT, UNION (FOR PRESSURE PORT UNION)						
8210-8212	BJ60,FJ60			90410-06030-	1	467	
8008-8210	FJ60				1	455	466
	44341 PLATE, SIDE, FRONT						
8210-8411	BJ60,FJ60			44341-30020-	1	467	514
8008-8210	FJ60				1	455	466
8411-	FJ60				1	515	
	44342 PLATE, SIDE, REAR						
8210-8411	BJ60,FJ60			44341-30020-	1	467	514
8411-	BJ60,HJ60			44341-12010-	1	515	
8008-8210	FJ60			44341-30020-	1	455	466
8411-	FJ60				1	515	
	44342A RING, O (FOR REAR SIDE PLATE)						
8411-	BJ60,HJ60			90301-53002-	1	515	
	44342B SPRING, COMPRESSION (FOR REAR SIDE PLATE)						
8411-	BJ60,HJ60			90501-23014-	1	515	

GENUINE TOYOTA PARTS

PROD.DATE	MODELS	DESCRIPTION	R/P	PART NUMBER	QTY	REV.REF.CODE FROM	REV.REF.CODE UP TO
	44343 SEAT, FLOW CONTROL SPRING						
8210-	BJ60,HJ60,FJ60			44343-12010-	1	467	
8008-8202	FJ60			44343-30020-	1	455	
8202-8210	FJ60			44343-12010-	1		466
	44343A RING, O (FOR FLOW CONTROL SPRING SEAT)						
8210-	BJ60,HJ60,FJ60			96711-19014-	1	467	
8008-8201	FJ60		*	96710-01014-	1	455	
8201-8210	FJ60			96711-19014-	1		466
	44344 SEAT, SPRING (FOR VANE PUMP)						
8210-8411	BJ60,FJ60			44344-30010-	6	467	514
8008-8210	FJ60				6	455	466
8411-	FJ60				6	515	
	44345 SLIPPER, VANE PUMP						
8210-8411	BJ60,FJ60	L=39.942-39.937		44307-22010-	1	467	514
8210-8411	BJ60,FJ60	L=39.937-39.932		44307-22020-	1	467	514
8008-8210	FJ60	L=39.942-39.937		44307-22010-	1	455	466
8008-8210	FJ60	L=39.937-39.932		44307-22020-	1	455	466
8411-	FJ60	L=39.942-39.937		44307-22010-	1	515	
8411-	FJ60	L=39.937-39.932		44307-22020-	1	515	
	44345A SPRING, COMPRESSION (FOR VANE PUMP SLIPPER)						
8210-8411	BJ60,FJ60			90501-06445-	24	467	514
8008-8210	FJ60				24	455	466
8411-	FJ60				24	515	
	44346 PLATE, SNAP RING LOCK						
8008-8202	FJ60			44346-30020-	1	455	

PROD.DATE	MODELS	DESCRIPTION	R/P	PART NUMBER	QTY	REV.REF.CODE FROM	REV.REF.CODE UP TO
	44348 PLATE, VANE PUMP						
8411-	BJ60,HJ60	ROTOR:NO MARK		44345-12010-	10	515	
8411-	BJ60,HJ60	ROTOR:MARK 1		44345-12020-	10	515	
8411-	BJ60,HJ60	ROTOR:MARK 2		44345-12030-	10	515	
8411-	BJ60,HJ60	ROTOR:MARK 3		44345-12040-	10	515	
8411-	BJ60,HJ60	ROTOR:MARK 4		44345-12050-	10	515	
	44362 RESERVOIR, OIL (FOR VANE PUMP)						
8210-8411	BJ60			44306-60060-	1	437	514
8411-8510	BJ60			44306-60070-	1	515	556
8008-8108	FJ60..WGG			44306-60040-	1	455	
8108-	FJ60..WGG			44306-60041-	1		
8008-8108	FJ60..WGV			44306-60030-	1	455	
8108-8110	FJ60..WGV			44306-60031-	1		458
8510-	HJ60			44360-60011-	1	567	
	44362A RING, O (FOR VANE PUMP OIL RESERVOIR)						
8210-	BJ60,FJ60			96711-19013-	1	467	
8008-8201	FJ60		#	96710-01013- (96711-19013-)	1	455	
8201-8210	FJ60			96711-19013-	1		466
	44391 PLATE, POWER STEERING OIL CAUTION						
8210-	BJ60,HJ60,FJ60			44391-30020-	1	467	
8008-8108	FJ60			44391-30010-	1	455	
8108-8210	FJ60			44391-30020-	1		466

PROD.DATE	MODELS	DESCRIPTION	R/P	PART NUMBER	QTY	REV.REF.CODE FROM	REV.REF.CODE UP TO

(8210-8510)BJ60

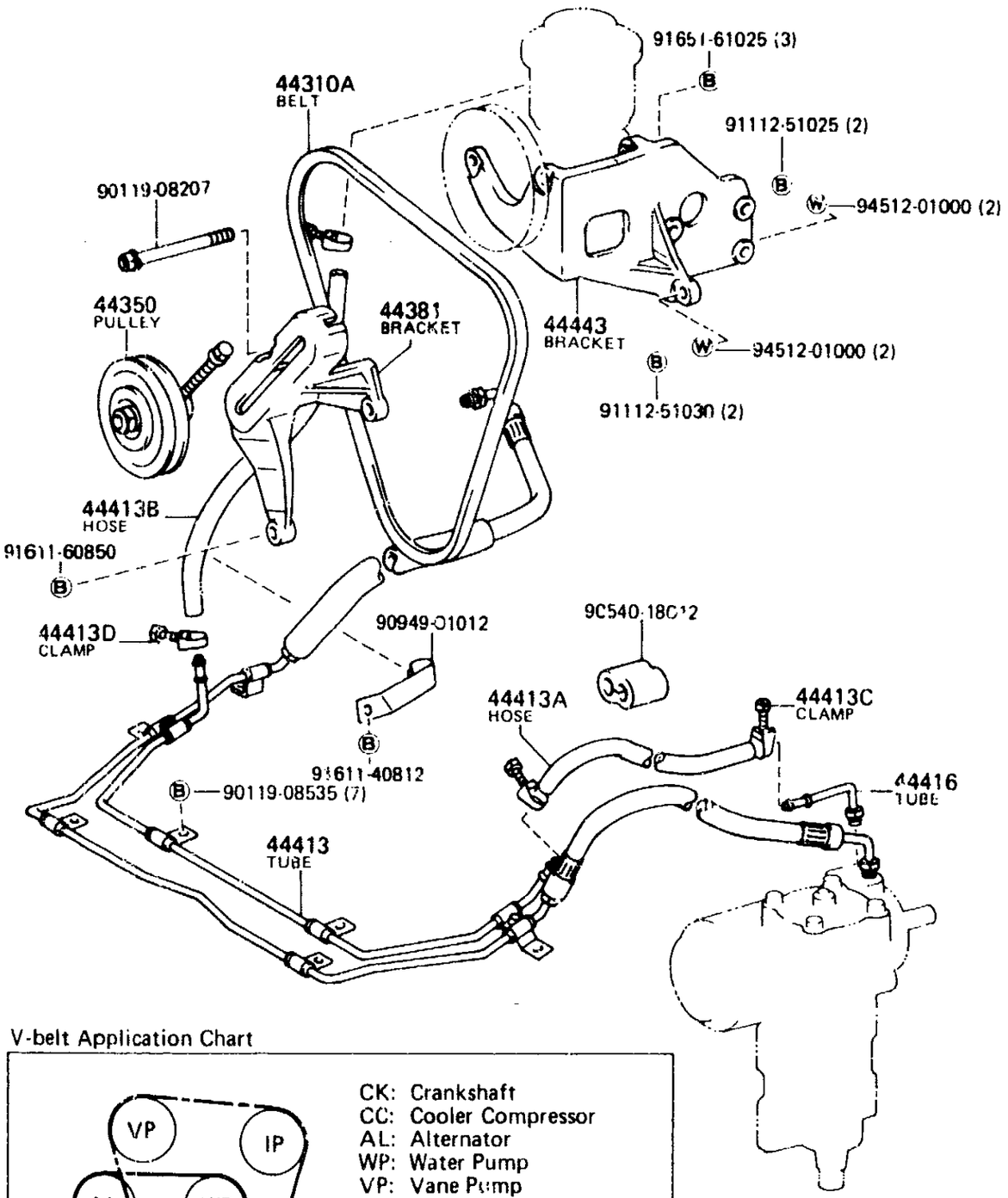

V-belt Application Chart

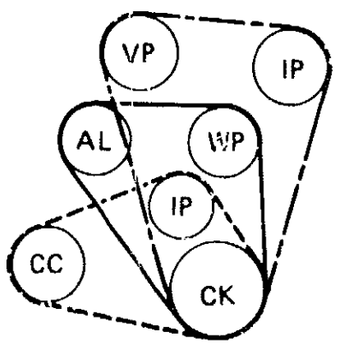

CK: Crankshaft
CC: Cooler Compressor
AL: Alternator
WP: Water Pump
VP: Vane Pump
IP: Idle Pulley

	P.N.C.	FIG. NO.
----	16361A	16-03
——···	44310A	45-03
- - - -	88310A	87-19

MC 9037-C

(8008-8110)FJ60••WGV

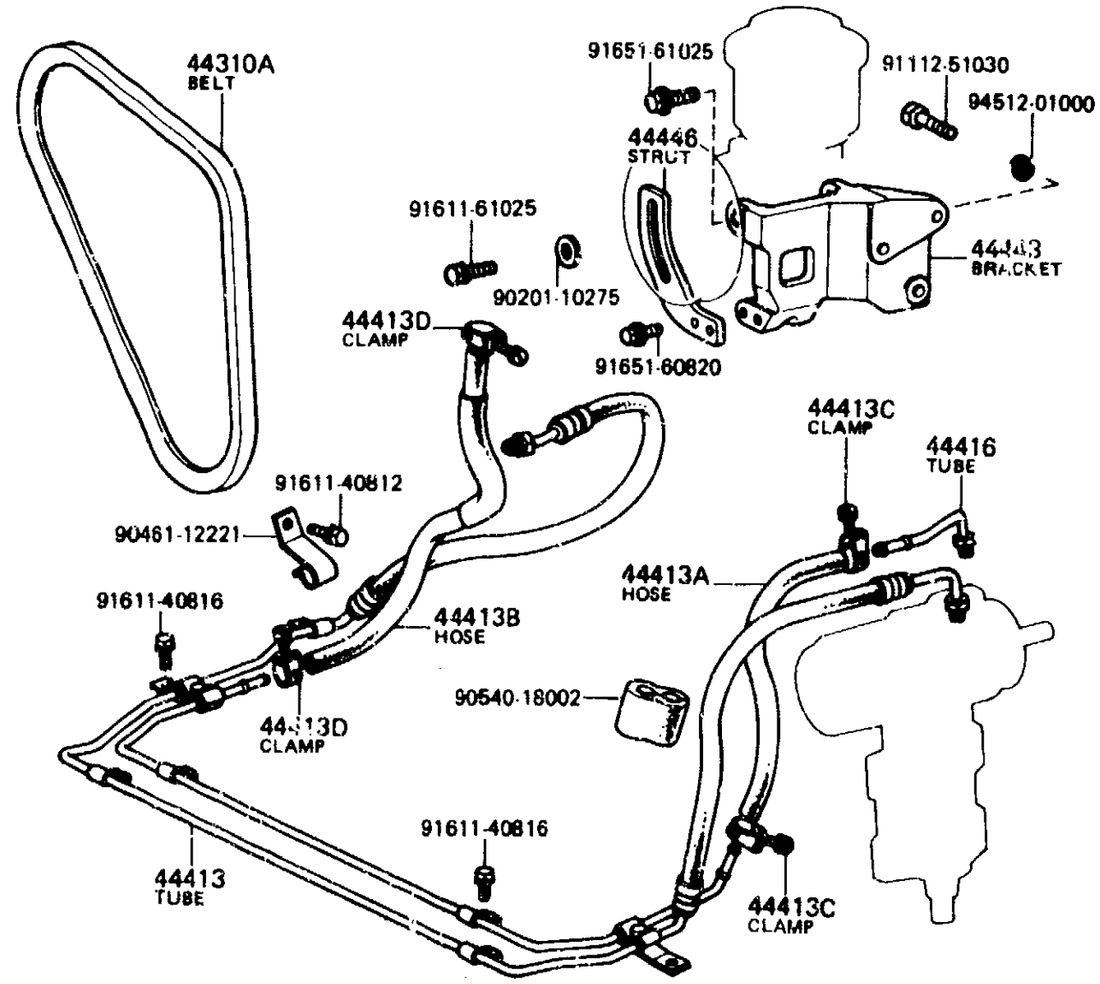

V-belt Application Chart

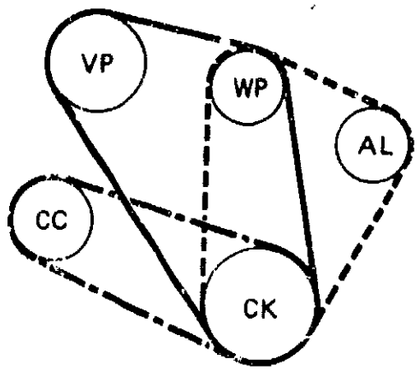

VP : Vane Pump
CC : Cooler Compressor
IP : Idle Pulley
WP : Water Pump
AL : Alternator
CK : Crankshaft

	P.N.C.	FIG. No.
——	44310A	45-03
- - - -	16361A	16-03
—·—	88310A	87-19

MC 719F A

FIG.45-03 OIL COOLER & TUBE

2-A12

(8008-)FJ60••WGG

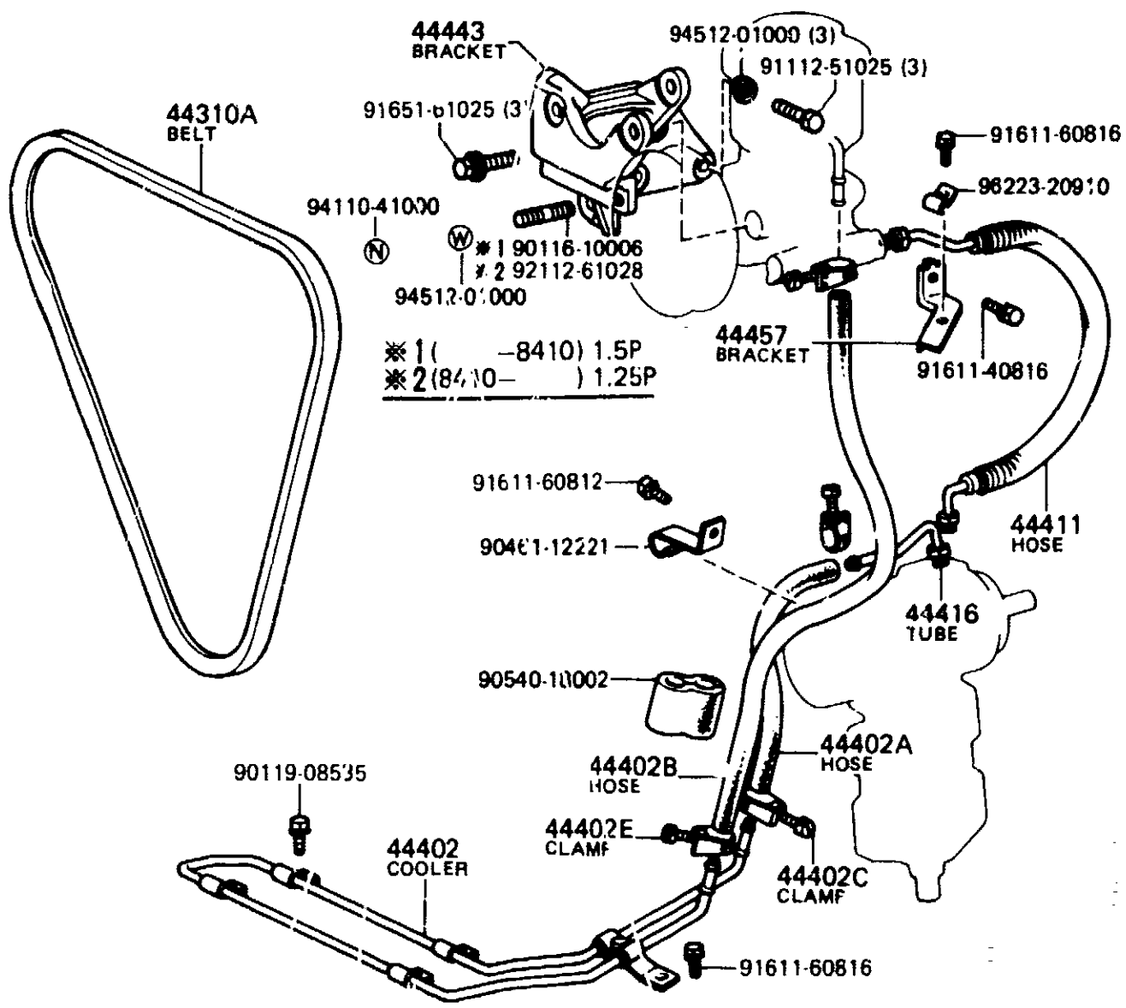

V-belt Application Chart

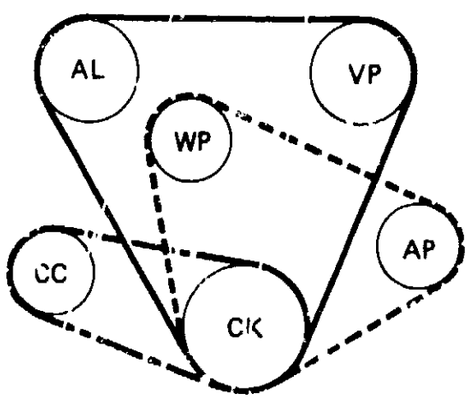

AL : Alternator
CC : Cooler Compressor
WP : Water Pump
CK : Crankshaft
VP : Vane Pump
AP : Air Pump

	P.N.C.	FIG. No.
———	44310A	45-03
- - - - -	17610B	17-05
—·—·—	88310A	87-19

MC 7196-D

(8510-)HJ60

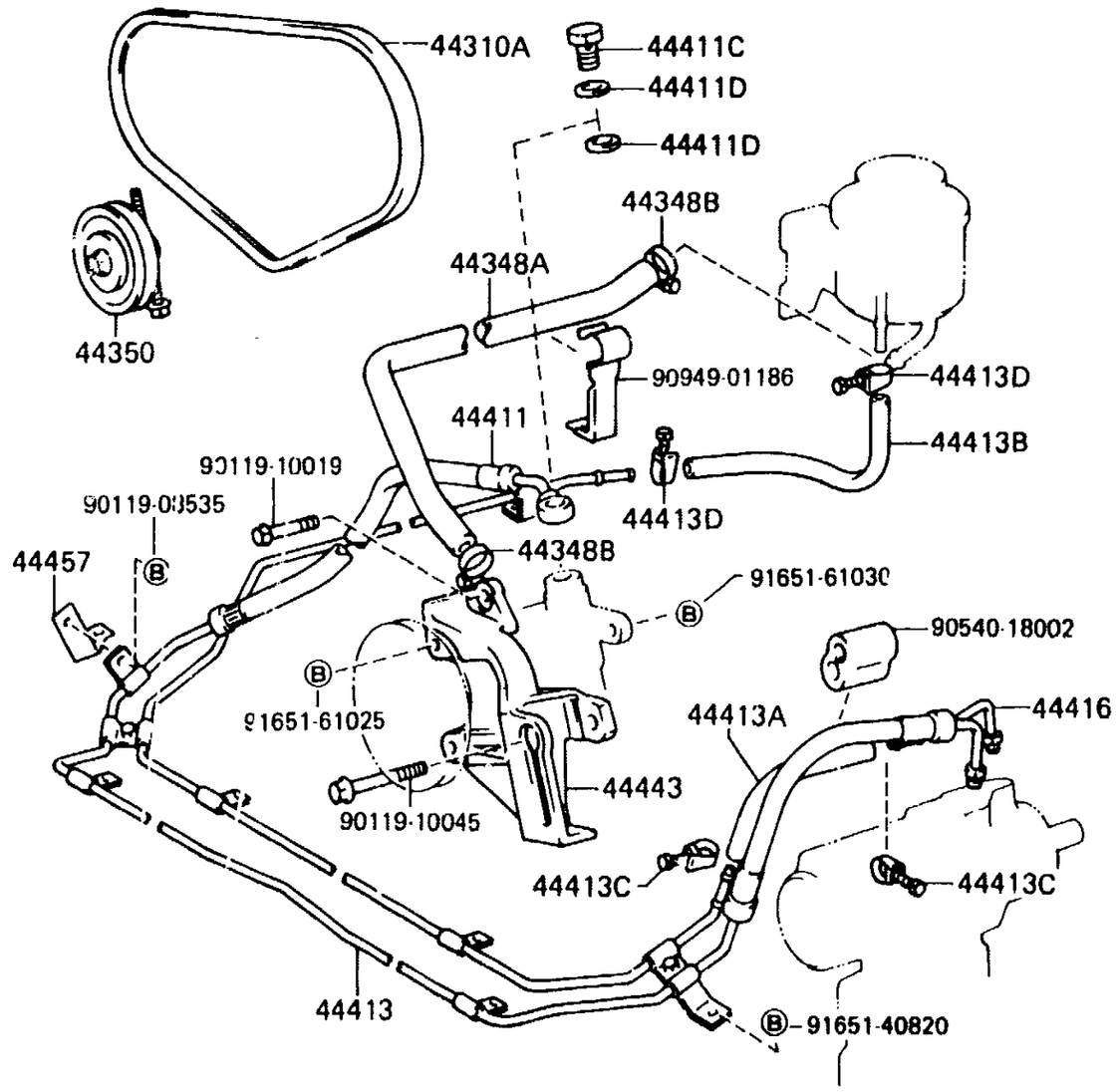

V-belt Application Chart

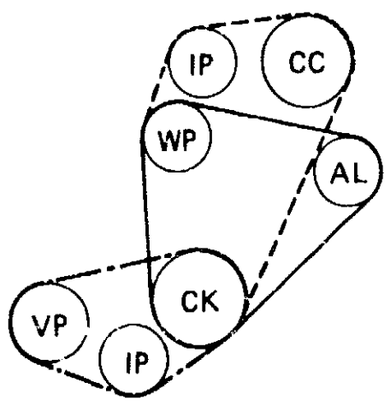

	P.N.C.	FIG. NO.
———	16361A	16-03
- - - - -	88310A	87-19
—·—·—	44310A	45-03

MC C995

GENUINE TOYOTA PARTS

	PROD.DATE	MODELS	DESCRIPTION	R/P	PART NUMBER	QTY	REV.REF.CODE FROM	REV.REF.CODE UP TO
	FIG. 45-03 OIL COOLER & TUBE							
		44310A BELT, V (FOR VANE PUMP)						
	8210-8510	BJ60			99343-11510-	1	467	566
	8008-	FJ60••WGG			99343-11570-	1	455	
	8008-8110	FJ60••WGV			90916-02093-	1	455	458
	8510-	HJ60			90916-02153-	1	567	
		44348A HOSE, OIL RESERVOIR TO PUMP						
	8510-	HJ60			4434•-60070-	1	567	
		44348B CLAMP (FOR OIL RESERVOIR TO PUMP HOSE)						
	8510-	HJ60			90460-26001-	2	567	
		44350 PULLEY ASSY, POWER STEERING IDLE						
	8210-8510	BJ60			4435•-60010-	1	467	566
	8510-	HJ60			16630-47020-	1	567	
		44353 BRACKET, POWER STEERING IDLE PULLEY						
	8210-8510	BJ60			44381-60011-	1	467	566
		44381 BRACKET, POWER STEERING IDLE PULLEY						
	8210-8510	BJ60			44381-60020-	1	467	566
		44402 COOLER SUB-ASSY, OIL						
C	8008-	FJ60••WGG			44420-60070-	1	455	
		44402A HOSE, POWER STEERING OIL COOLER INLET						
C	8008-	FJ60••WGG			90445-18089-	1	455	
		44402B HOSE, POWER STEERING OIL COOLER OUTLET						
C	8008-	FJ60••WGG			90445-18085-	1	455	
		44402C CLAMP, POWER STEERING OIL COOLER INLET HOSE						
C	8008-	FJ60••WGG			90460-01001-	2	455	
		44402E CLAMP, POWER STEERING OIL COOLER OUTLET HOSE						
C	8008-	FJ60••WGG			90460-01001-	2	455	

	PROD.DATE	MODELS	DESCRIPTION	R/P	PART NUMBER	QTY	REV.REF.CODE FROM	REV.REF.CODE UP TO
		44411 HOSE, PRESSURE FEED						
	8008-8012	FJ60••WGG			# 44411-60130- (44411-60131-)	1	455	
C	8012-	FJ60••WGG			44411-60131-	1		
		44411C BOLT, UNION (FOR PRESSURE FEED HOSE)						
	8510--	HJ60			90401-16008-	1	567	
		44411D GASKET (FOR PRESSURE FEED HOSE)						
	8510-	HJ60			90430-16242-	2	567	
		44413 TUBE, PRESSURE FEED						
	8210-8411	BJ60			44410-60070-	1	467	51•
	8411-8510	BJ60			44410-60160-	1	515	566
	8008-8012	FJ60••WGV			# 44410-60040- (44410-60041--)	1	455	
	8012-8110	FJ60••WGV			44410-60041-	1		458
	8510-	HJ60			44410-60130-	1	567	
		44413A HOSE (FOR RETURN TUBE OUTLET)						
	8210-	BJ60,HJ60			90445-18089-	1	467	
	8008-8110	FJ60••WGV				1	455	458
		44413B HOSE (FOR RESERVOIR TANK INLET)						
	8210-8510	BJ60			90445-18090-	1	467	566
	8008-8110	FJ60••WGV				1	455	458
	8510-	HJ60			90445-18089-	1	567	
		44413C CLAMP (FOR RETURN TUBE OUTLET HOSE)						
	8210-	BJ60,HJ60			90460-01001-	2	467	
	8008-8110	FJ60••WGV				2	455	458
		44413D CLAMP (FOR RESERVOIR TANK INLET HOSE)						
	8210-	BJ60,HJ60			90460-01001-	2	467	
	8008-8110	FJ60••WGV				2	455	458

GENUINE TOYOTA PARTS

	PROD.DATE	MODELS	DESCRIPTION	R/P	PART NUMBER	QTY	REV.REF.CODE FROM	REV.REF.CODE UP TO
		44416 TUBE, RETURN (FOR STEERING GEAR OUTLET)						
C	8210-8604	BJ60,FJ60			# 44416-60060- (44416-60061-)	1	467	572
	8008-8210	FJ60				1	455	466
C	8604-	FJ60			44416-60061-	1	573	
	8510-	HJ60				1	567	
		44443 BRACKET, PUMP						
	8210-8411	BJ60			44443-60040-	1	467	514
	8411-8510	BJ60			44443-60060-	1	515	566
	8008-	FJ60••WGG			44443-60020-	1	455	
	8008-8110	FJ60••WGV			44443-60010-	1	455	458
	8510-	HJ60			44443-60071-	1	567	
		44446 STRUT, ADJUSTING						
	8008-8110	FJ60••WGV			44446-60010-	1	455	458
		44457 BRACKET, TUBE SUPPORT						
	8008-	FJ60••WGG			44457-60100-	1	455	

(8008-8210)CND

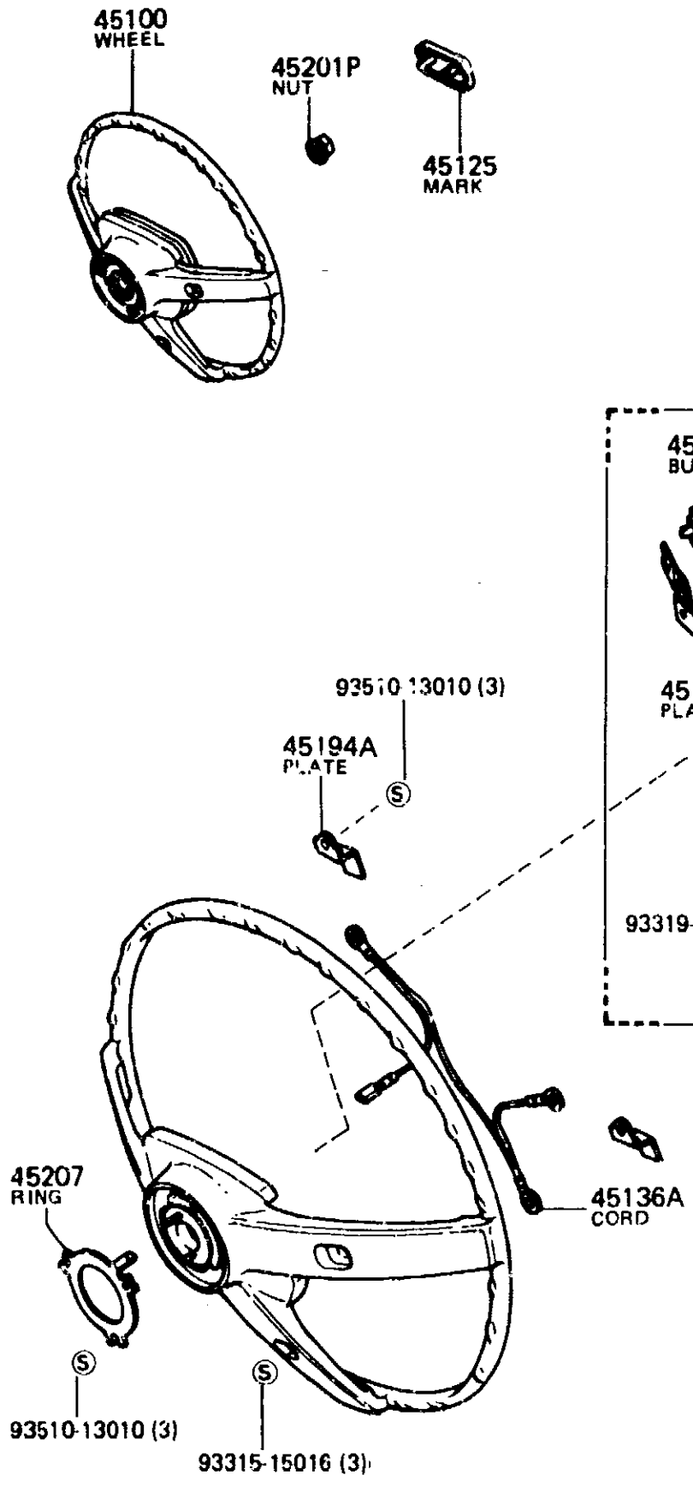

MC 7127-A

(8008-)FJ60; (8210-8510)BJ60; (8510-)HJ60

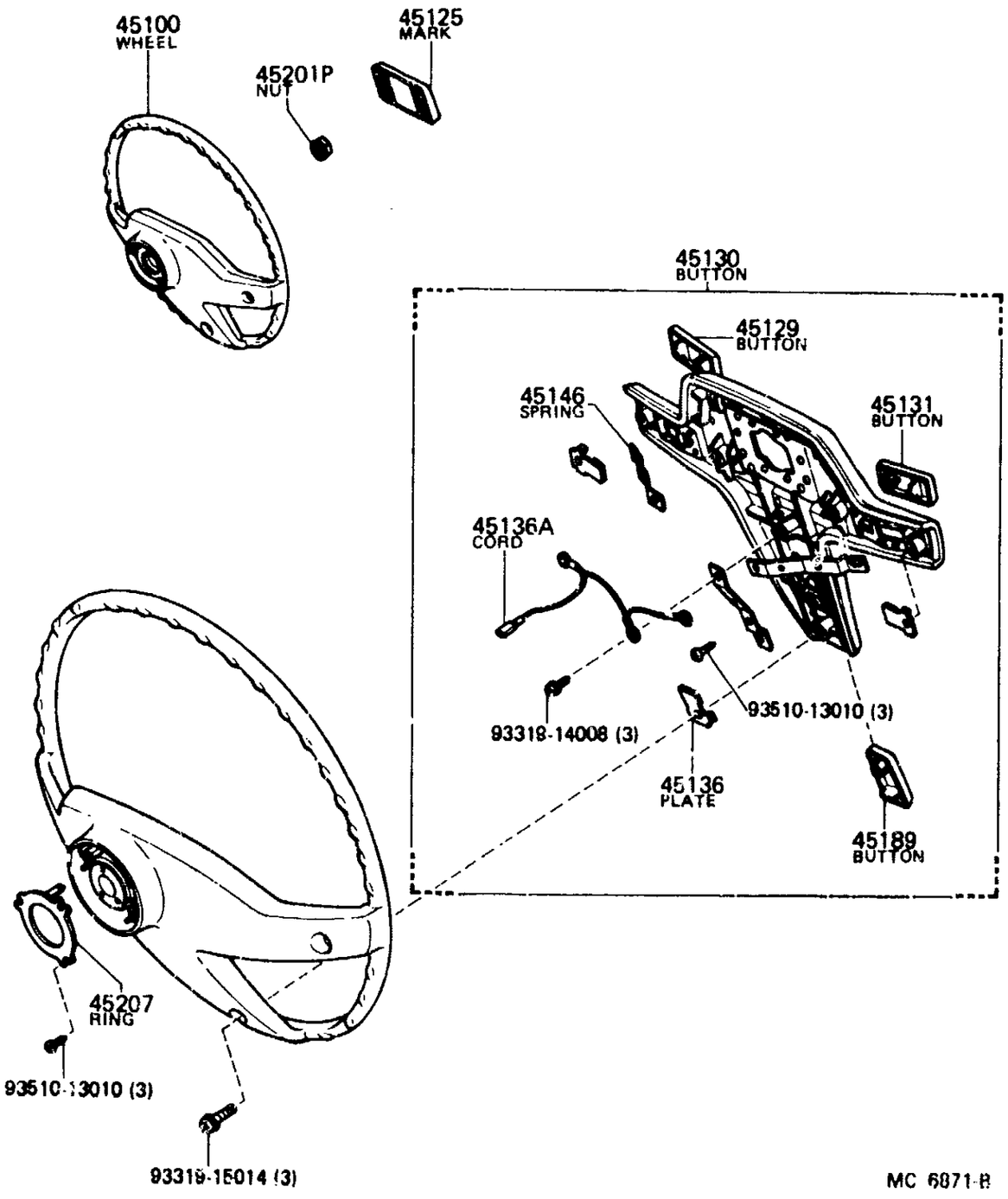

MC 6871-B

PROD.DATE	MODELS	DESCRIPTION	R/P	PART NUMBER	QTY	REV.REF.CODE FROM	REV.REF.CODE UP TO
FIG. 45-04 STEERING WHEEL							
	45100 WHEEL ASSY, STEERING						
C 8110-8210	BJ60	GRAY		45100-60060-03	1	459	466
8411-8504	BJ60	SHADOW GRAY		45100-60150-03	1	515	554
8411-8504	BJ60	SEPIA BROWN		45100-60150-16	1	515	554
8210-8411	BJ60,FJ60	SHADOW GRAY,W/POWER STEERING	#	45100-22160-03 (45100-60150-03)	1	467	514
8210-8411	BJ60,FJ60	DARK BROWN,W/POWER STEERING	#	45100-22160-06 (45100-60150-16)	1	467	514
8008-8110	BJ60,FJ60..WGV		#	45100-60070- (45100-60070-06)	1	455	458
8504-	BJ60,HJ60,FJ60	SHADOW GRAY		45100-60150-03	1	555	
8504-	BJ60,HJ60,FJ60	SEPIA BROWN		45100-60150-16	1	555	
8008-8210	FJ60	W/POWER STEERING	#	45100-22160-06 (45100-60150-16)	1	455	466
8411-8504	FJ60	SHADOW GRAY,W/POWER STEERING	#	45100-22160-03 (45100-60150-03)	1	515	554
8411-8504	FJ60	DARK BROWN,W/POWER STEERING	#	45100-22160-06 (45100-60150-16)	1	515	554
	45105 PLATE SUB-ASSY, HORN BUTTON CONTACT						
8110-8210	BJ60			45105-60010-	3	459	466
8008-8110	BJ60,FJ60..WGV				3	455	458
	45125 MARK, STEERING WHEEL PAD						
8110-8210	BJ60	SHADOW GRAY		45125-60020-03	1	459	466
8110-8210	BJ60	DARK BROWN		45125-60020-06	1	459	466
8008-8110	BJ60,FJ60..WGV	SHADOW GRAY		45125-60020-03	1	455	458
8008-8110	BJ60,FJ60..WGV	DARK BROWN		45125-60020-06	1	455	458
8210-	BJ60,HJ60,FJ60	W/POWER STEERING		45125-60030-	1	467	

PROD.DATE	MODELS	DESCRIPTION	R/P	PART NUMBER	QTY	REV.REF.CODE FROM	REV.REF.CODE UP TO
	45125 MARK, STEERING WHEEL PAD CONTINUED						
C 8008-8210	FJ60	W/POWER STEERING		45125-60030-	1	455	466
	45129 BUTTON, HORN, NO.2						
8110-8210	BJ60			45131-60040-	1	459	466
8411-8504	BJ60			45131-60060-	1	515	554
8210-8411	BJ60,FJ60	W/POWER STEERING		45131-22070-	1	467	514
8008-8110	BJ60,FJ60..WGV			45131-60050-	1	455	458
8504-	BJ60,HJ60,FJ60			45131-60060-	1	555	
8008-8210	FJ60	W/POWER STEERING		45131-22070-	1	455	466
8411-8504	FJ60	W/POWER STEERING			1	515	554
	45130 BUTTON ASSY, HORN						
8110-8210	BJ60			45130-60020-	1	459	466
8411-8504	BJ60	SHADOW GRAY		45130-60090-03	1	515	554
8411-8504	BJ60	SEPIA BROWN		45130-60090-06	1	515	554
8210-8411	BJ60,FJ60	SHADOW GRAY,W/POWER STEERING	#	45130-22110-03 (45130-60090-03)	1	467	514
8210-8411	BJ60,FJ60	DARK BROWN,W/POWER STEERING	#	45130-22110-06 (45130-60090-16)	1	467	514
8008-8110	BJ60,FJ60..WGV		#	45130-60030- (45130-60030-06)	1	455	458
8504-	BJ60,HJ60,FJ60	SHADOW GRAY		45130-60090-03	1	555	
C 8504-	BJ60,HJ60,FJ60	SEPIA BROWN		45130-60090-16	1	555	
8008-8210	FJ60	W/POWER STEERING	#	45130-22110-06 (45130-60090-16)	1	455	466
8411-8504	FJ60	SHADOW GRAY,W/POWER STEERING	#	45130-22110-03 (45130-60090-03)	1	515	554
8411-8504	FJ60	DARK BROWN,W/POWER STEERING	#	45130-22110-06 (45130-60090-16)	1	515	554

GENUINE TOYOTA PARTS

PROD.DATE	MODELS	DESCRIPTION	R/P	PART NUMBER	QTY	REV.REF.CODE FROM	REV.REF.CODE UP TO
	45131 BUTTON, HORN, NO.1						
8110-8210	BJ60			45131-60040-	1	459	466
8411-8504	BJ60			45131-60060-	1	515	554
8210-8411	BJ60,FJ60	W/POWER STEERING		45131-22070-	1	467	514
8008-8110	BJ60,FJ60..WGV			45131-60050-	1	455	458
8504-	BJ60,HJ60,FJ60			45131-60060-	1	555	
8008-8210	FJ60	W/POWER STEERING		45131-22070-	1	455	466
8411-8504	FJ60	W/POWER STEERING			1	515	554
	45136 PLATE, HORN BUTTON CONTACT						
8210-	BJ60,HJ60,FJ60			45136-26020-	3	467	
8008-8210	FJ60				3	455	466
	45136A CORD (FOR HORN CONTACT RING)						
8110-8210	BJ60			90945-02048-	1	459	466
8008-8110	BJ60,FJ60..WGV				1	455	458
8210-	BJ60,HJ60,FJ60	W/POWER STEERING		90945-02032-	1	467	
8008-8210	FJ60	W/POWER STEERING			1	455	466
	45146 SPRING, HORN BUTTON CONTACT						
8210-	BJ60,HJ60,FJ60			45146-22050-	3	467	
8008-8210	FJ60				3	455	466
	45189 BUTTON, HORN, NO.3						
8110-8210	BJ60			45131-60040-	1	459	466
8411-8504	BJ60			45131-60060-	1	515	554
8210-8411	BJ60,FJ60	W/POWER STEERING		45131-22070-	1	467	514
8008-8110	BJ60,FJ60..WGV			45131-60050-	1	455	458
8504-	BJ60,HJ60,FJ60			45131-60060-	1	555	
8008-8210	FJ60	W/POWER STEERING		45131-22070-	1	455	466

GENUINE TOYOTA PARTS

PROD.DATE	MODELS	DESCRIPTION	R/P	PART NUMBER	QTY	REV.REF.CODE FROM	REV.REF.CODE UP TO
	45189 BUTTON, HORN, NO.3 CONTINUED						
8411-8504	FJ60	W/POWER STEERING		45131-22070-	1	515	554
	45194A PLATE, HORN BUTTON CONTACT, NO.2						
8110-8210	BJ60			45194-60010-	3	459	466
8008-8110	BJ60,FJ60..WGV				3	455	458
	45201P NUT, STEERING WHEEL SET						
8008-	BJ60,HJ60,FJ60			90179-12086--	1	455	
	45207 RING, HORN CONTACT						
8008--	BJ60,HJ60,FJ60			45176-20030-	1	455	

(8008-)

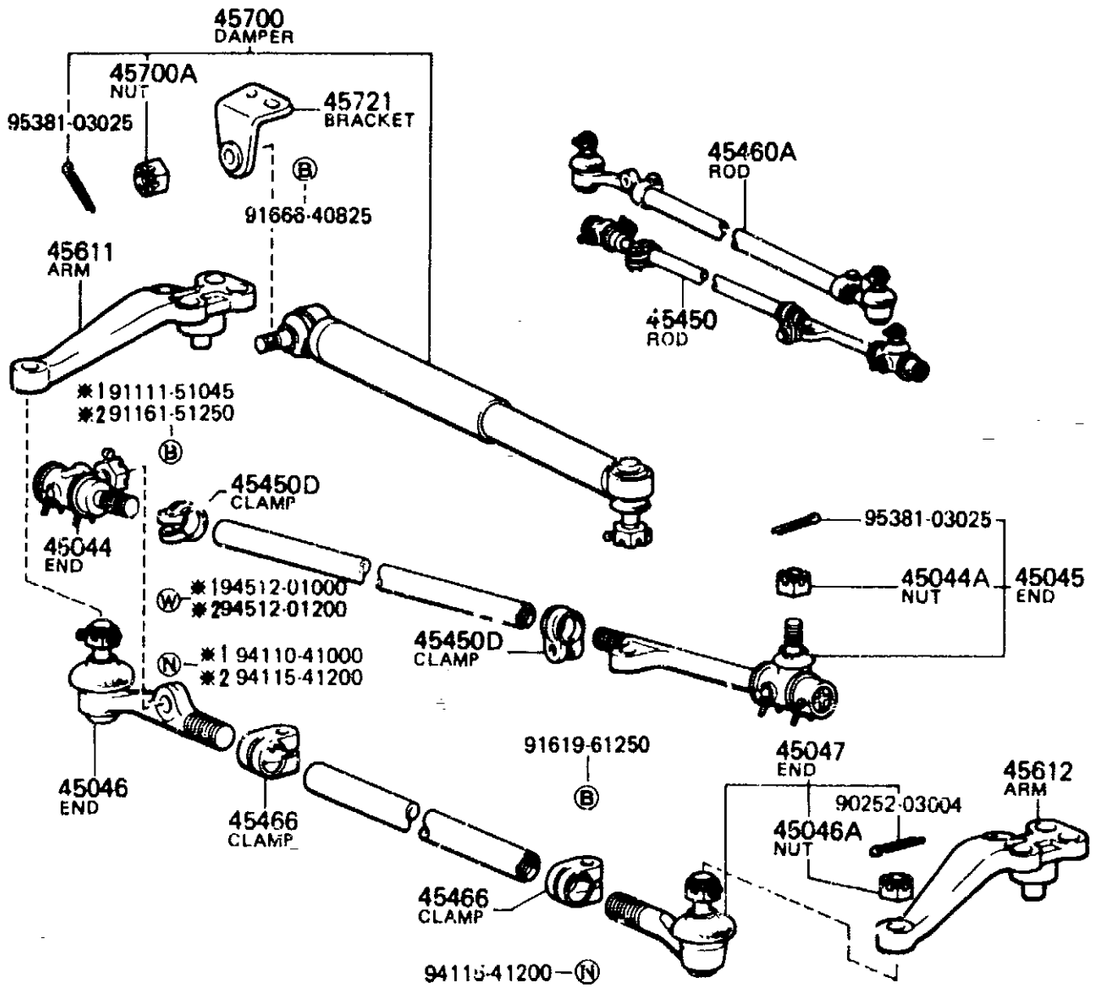

✱1 (-8306)
✱2 (8306-)

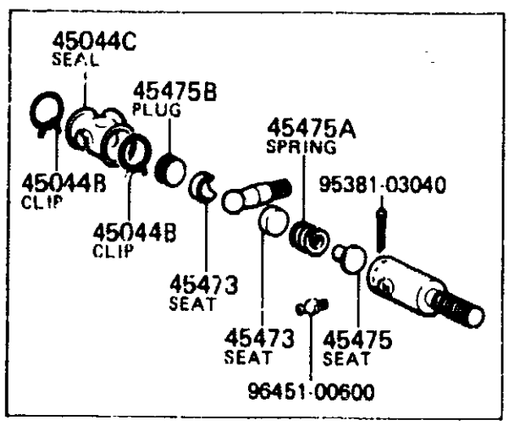

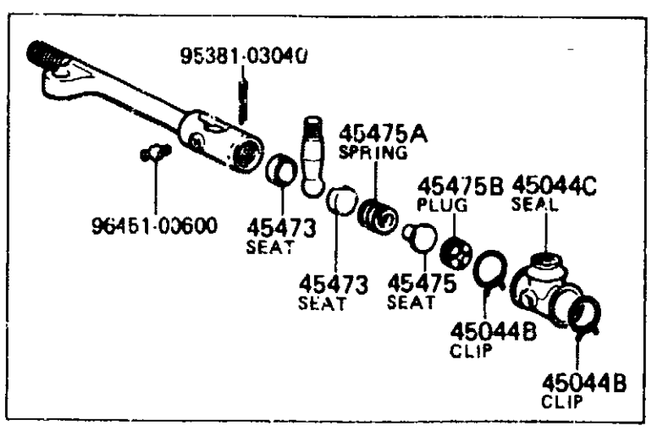

MC 7200-G

GENUINE TOYOTA PARTS

PROD.DATE	MODELS	DESCRIPTION	R/P	PART NUMBER	QTY	REV.REF.CODE FROM	REV.REF.CODE UP TO
FIG•	45-05 STEERING LINK						
	45044 | END SUB-ASSY, STEERING RELAY ROD, RH						
8008-8306	BJ60,FJ60			# 45045-69035·· (45045-69045-)	1	455	502
8306-	BJ60,HJ60,FJ60			45045-69045-	1	503	
	45044A | NUT,CASTLE (FOR RELAY ROD)						
8008-	BJ60,HJ60,FJ60			90171-14042-	2	455	
	45044B | RING, SET (FOR RELAY ROD)						
8008-	BJ60,HJ60,FJ60			90467-32002-	4	455	
	45044C | SEAL, DUST (FOR RELAY ROD)						
8008-	BJ60,HJ60,FJ60	LH		45457-60010-	1	455	
8008-	BJ60,HJ60,FJ60	RH		45458-60010-	1	455	
	45045 | END SUB-ASSY, STEERING RELAY ROD,LH						
8008-8306	BJ60,FJ60			# 45044-69035- (45044-69055-)	1	455	502
8306-	BJ60,HJ60,FJ60			45044-69055-	1	503	
	45046 | END SUB-ASSY, TIE ROD, RH						
C 8008-	BJ60,HJ60,FJ60			45046-69115-	1	455	
	45046A | NUT, CASTLE (FOR TIE ROD END)						
8008-	BJ60,HJ60,FJ60			90171-14042-	2	455	
	45047 | END SUB-ASSY, TIE ROD, LH						
8008-	BJ60,HJ60,FJ60			45047-69065··	1	455	
	45450 | ROD ASSY, STEERING RELAY						
8008-8306	BJ60,FJ60			# 45450-69035- (45450-69055-)	1	455	502
8306-	BJ60,HJ60,FJ60			45450-69055-	1	503	
	45450D | CLAMP, STEERING RELAY ROD END						
8008-8306	BJ60,FJ60			45466-55010-	2	455	502
8306-	BJ60,HJ60,FJ60			45466-55020-	2	503	

	PROD.DATE	MODELS	DESCRIPTION	R/P	PART NUMBER	QTY	REV.REF.CODE FROM	REV.REF.CODE UP TO
		45460A	ROD ASSY, TIE					
C	8008-	BJ60,HJ60,FJ60			45460-69105-	1	455	
		45466	CLAMP, TIE ROD END					
	8008-	BJ60,HJ60,FJ60			45466-36010-	2	455	
		45473	SEAT, BALL STUD					
	8008-	BJ60,HJ60,FJ60			45473-35010-	4	455	
		45475	SEAT, STEERING LINK JOINT SPRING					
	8008-	BJ60,HJ60,FJ60			45475-35010-	2	455	
		45475A	SPRING, COMPRESSION (FOR STEERING LINK JOINT)					
	8008-	BJ60,HJ60,FJ60			90501-45114-	2	455	
		45475B	PLUG, STRAIGHT SCREW (FOR STEERING LINK JOINT)					
	8008-	BJ60,HJ60,FJ60			90340-25001-	2	455	
		45611	ARM, STEERING KNUCKLE, RH					
	8008-	BJ60,HJ60,FJ60			45611-60040-	1	455	
		45612	ARM, STEERING KNUCKLE, LH					
	8008-	BJ60,HJ60,FJ60			45612-60040-	1	455	
		45700	DAMPER ASSY, STEERING					
	8008-	BJ60,HJ60,FJ60			45700-69025-	1	455	
		45700A	NUT (FOR STEERING DAMPER)					
	8411-8504	BJ60			94184-61200-	2	515	554
	3008-8411	BJ60,FJ60			90171-12028-	2	455	514
	8504-	BJ60,HJ60,FJ60			94184-61200-	2	555	
	8411-8304	FJ60			90171-12028-	2		554
		45721	BRACKET, STEERING DAMPER					
	8008-	BJ60,HJ60,FJ60			45721-60030-	1	455	

FIG.46-01 PARKING BRAKE & CABLE

(8008-)

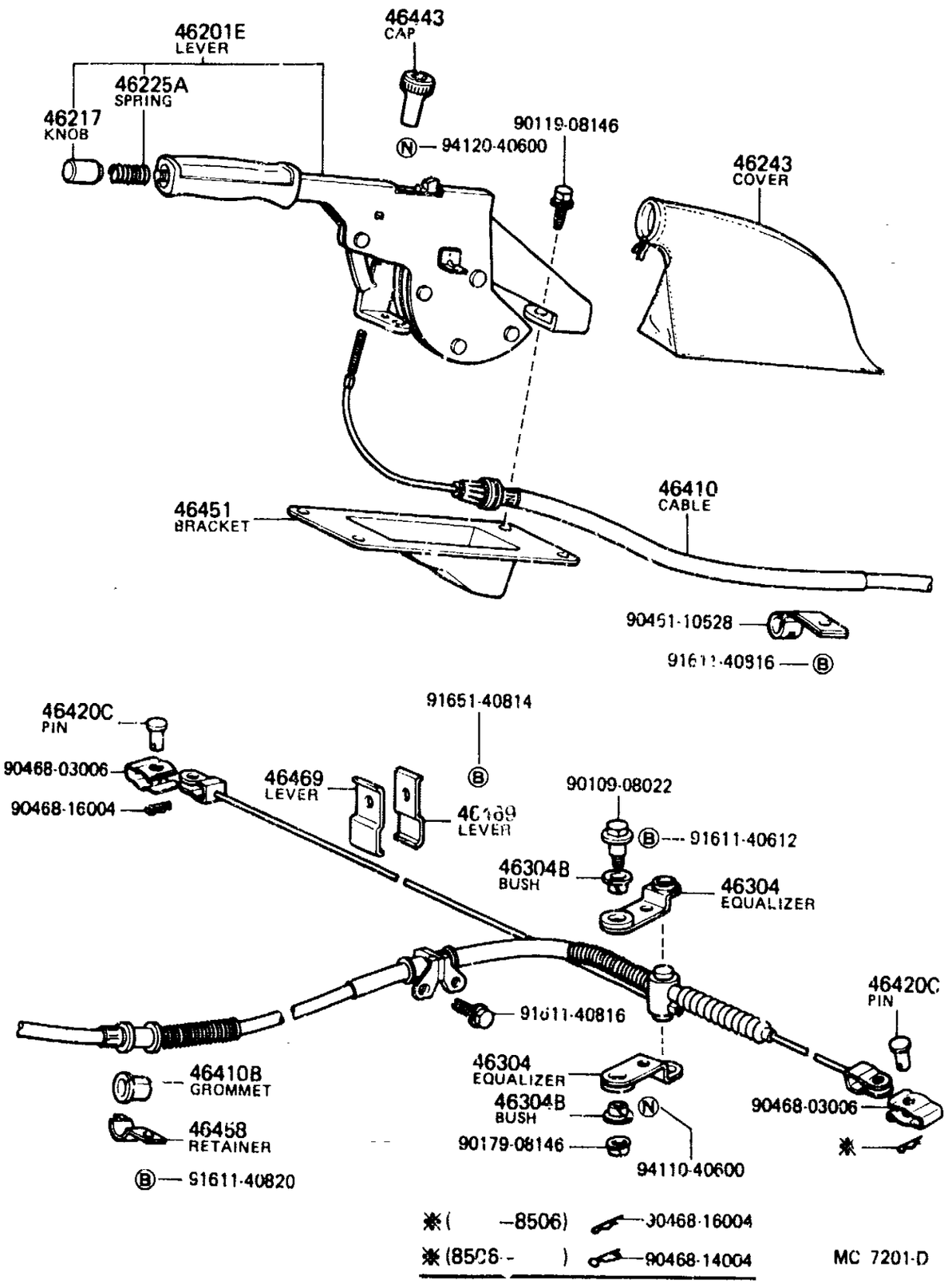

GENUINE TOYOTA PARTS

PROD.DATE	MODELS	DESCRIPTION	R/P	PART NUMBER	QTY	CODE FR	CODE TO
FIG.	46-01 PARKING BRAKE & CABLE						
	46201E LEVER SUB-ASSY, PARKING BRAKE						
8411-8504	BJ60	SEPIA BROWN		46210-60040-16	1	515	554
8008-8210	BJ60,FJ60		#	46210-60040- (46210-60040-06)	1	455	466
8210-8411	BJ60,FJ60	DARK BROWN		46210-60040-06	1	467	514
8210-	BJ60,HJ60,FJ60	BLACK		46210-60040-01	1	467	
8504-	BJ60,HJ60,FJ60	SEPIA BROWN		46210-60040-16	1	555	
8411-8504	FJ60	DARK BROWN		46210-60040-06	1	515	554
	46217 KNOB, PARKING BRAKE RELEASE ROD						
8411-8504	BJ60	SEPIA BROWN		46217-10020-56	1	515	554
8008-8411	BJ60,FJ60	DARK BROWN	#	46217-10020-26 (46217-20020-16)	1	455	514
8210-	BJ60,HJ60,FJ60	BLACK		46217-10020-01	1	467	
8504-	BJ60,HJ60,FJ60	SEPIA BROWN		46217-10020-56	1	555	
8411-8504	FJ60	DARK BROWN	#	46217-10020-26 (46217-20020-16)	1	515	554
	46225A SPRING, COMPRESSION (FOR PARKING BRAKE PAWL RD)						
8008-	BJ60,HJ60,FJ60			90501-10745-	1	455	
	46243 COVER, PARKING BRAKE LEVER						
8411-8504	BJ60	SEPIA BROWN		46243-60030-16	1	515	554
8008-8210	BJ60,FJ60		#	46243-60030- (46243-60030-06)	1	455	466
8210-8411	BJ60,FJ60	DARK BROWN		46243-60030-06	1	467	514
8210-	BJ60,HJ60,FJ60	BLACK		46243-60030-01	1	467	
8504-	BJ60,HJ60,FJ60	SEPIA BROWN		46243-60030-16	1	555	
8411-8504	FJ60	DARK BROWN		46243-60030-06	1	515	554
	46304 EQUALIZER SUB-ASSY, PARKING BRAKE						
8008-	BJ60,HJ60,FJ60			46341-31010-	2	455	

GENUINE TOYOTA PARTS

PROD.DATE	MODELS	DESCRIPTION	R/P	PART NUMBER	QTY	REV.REF.CODE FROM	REV.REF.CODE UP TO
	46304B BUSH (FOR PARKING BRAKE EQUALIZER)						
8008-	BJ60,HJ60,FJ60			90385-12029-	2	455	
	46410 CABLE ASSY, PARKING BRAKE, NO.1						
8411-8504	BJ60			46410-60101-	1	515	554
8008-8411	BJ60,FJ60			46410-60100-	1	455	514
8504-	BJ60,HJ60,FJ60			46410-60101-	1	555	
8411-8504	FJ60			46410-60100-	1	515	554
	46410B GROMMET (FOR PARKING BRAKE FRONT CABLE)						
8008-	BJ60,HJ60,FJ60			90480-17158-	1	455	
	46420C PIN, W/HOLE (FOR PARKING BRAKE CABLE)						
8008-	BJ60,HJ60,FJ60			90240-08042-	2	455	
	46443 CAP, CABLE ADJUSTING						
8008-	BJ60,HJ60,FJ60			46443-12020-	1	455	
	46451 BRACKET, CABLE SUPPORT						
8008-	BJ60,HJ60,FJ60			46451-60030--	1	455	
	46458 RETAINER, CABLE						
8008-	BJ60,HJ60,FJ60			46458-30020-	1	455	
	46469 LEVER, CABLE GUIDE SUPPORT						
8008-	BJ60,HJ60,FJ60			46469-60010--	2	455	

FIG.47-01 BRAKE PEDAL & BRACKET

(8008-)

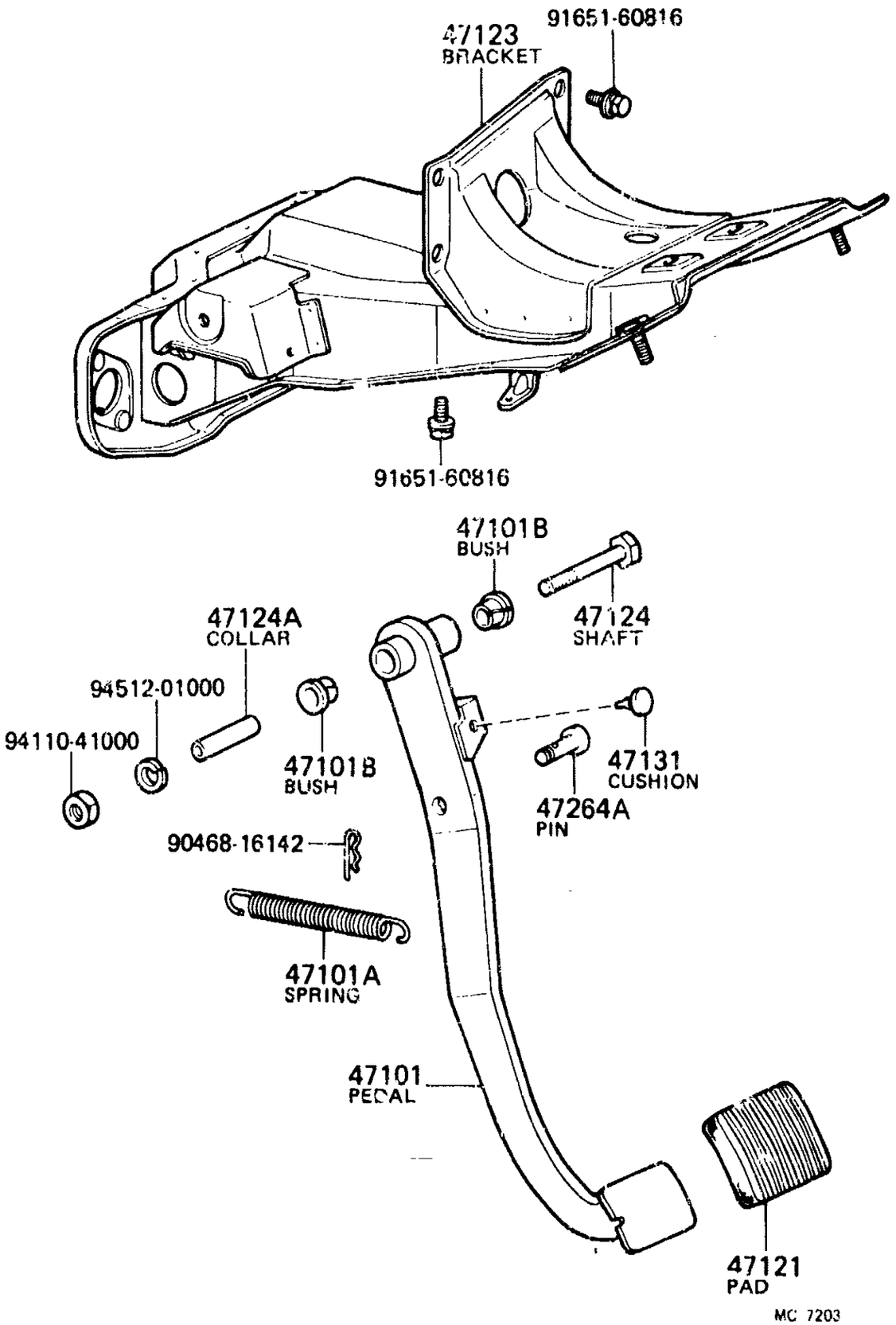

GENUINE TOYOTA PARTS

PROD.DATE	MODELS	DESCRIPTION	R/P	PART NUMBER	QTY	REV.REF.CODE FROM	REV.REF.CODE UP TO
FIG.	47-01 BRAKE PEDAL & BRACKET						
	47101 PEDAL SUB-ASSY, BRAKE						
8411-8504	BJ60			47101-60091-	1	515	554
8008-8411	BJ60,FJ60			47101-60090-	1	455	514
8504-	BJ60,HJ60,FJ60..MTM			47101-60091-	1	555	
8411-8504	FJ60			47101-60090-	1	515	554
8510-	HJ60..ATM			47101-60150-	1	567	
	47101A SPRING (FOR BRAKE PEDAL RETURN)						
8008-	BJ60,HJ60,FJ60			90506-12451-	1	455	
	47101B BUSH (FOR BRAKE PEDAL)						
8008-	BJ60,HJ60,FJ60			90386-13192-	2	455	
	47121 PAD, BRAKE PEDAL						
8008-	BJ60,HJ60,FJ60..MTM			31321-36010-	1	455	
8510-	HJ60..ATM			47121-30050-	1	567	
	47123 BRACKET, BRAKE PEDAL						
8411-8504	BJ60			55106-90A05-	1	515	554
8008-8411	BJ60,FJ60			55106-90A01-	1	455	514
8411-	BJ60,HJ60..MTM	W/CLUTCH BOOSTER		55106-90A07-	1	515	
8504-	BJ60,HJ60,FJ60..MTM			55106-90A05-	1	555	
8411-8504	FJ60			55106-90A01-	1	515	554
8510-	HJ60..ATM			55106-90A09-	1	567	
	47124 SHAFT, PEDAL						
8008-	BJ60,HJ60,FJ60			91121-51070-	1	455	
	47124A COLLAR (FOR PEDAL SHAFT)						
8008-	BJ60,HJ60,FJ60			90387-10004-	1	455	
	47131 CUSHION (FOR STOP LAMP SWITCH)						
8008-	BJ60,HJ60,FJ60			90541-06008-	1	455	

PROD.DATE	MODELS	DESCRIPTION	R/P	PART NUMBER	QTY	REV.REF.CODE FROM	REV.REF.CODE UP TO
	47264A PIN (FOR PUSH ROD)						
8008-	BJ60,HJ60,FJ60			90249-10017-	1	455	

PROD.DATE	MODELS	DESCRIPTION	R/P	PART NUMBER	QTY	REV.REF.CODE FROM	REV.REF.CODE UP TO

FIG.47-02 BRAKE MASTER CYLINDER

2-M12

MR4-II-0452

(8008-8411)BJ60,FJ60; (8411-8504)FJ60

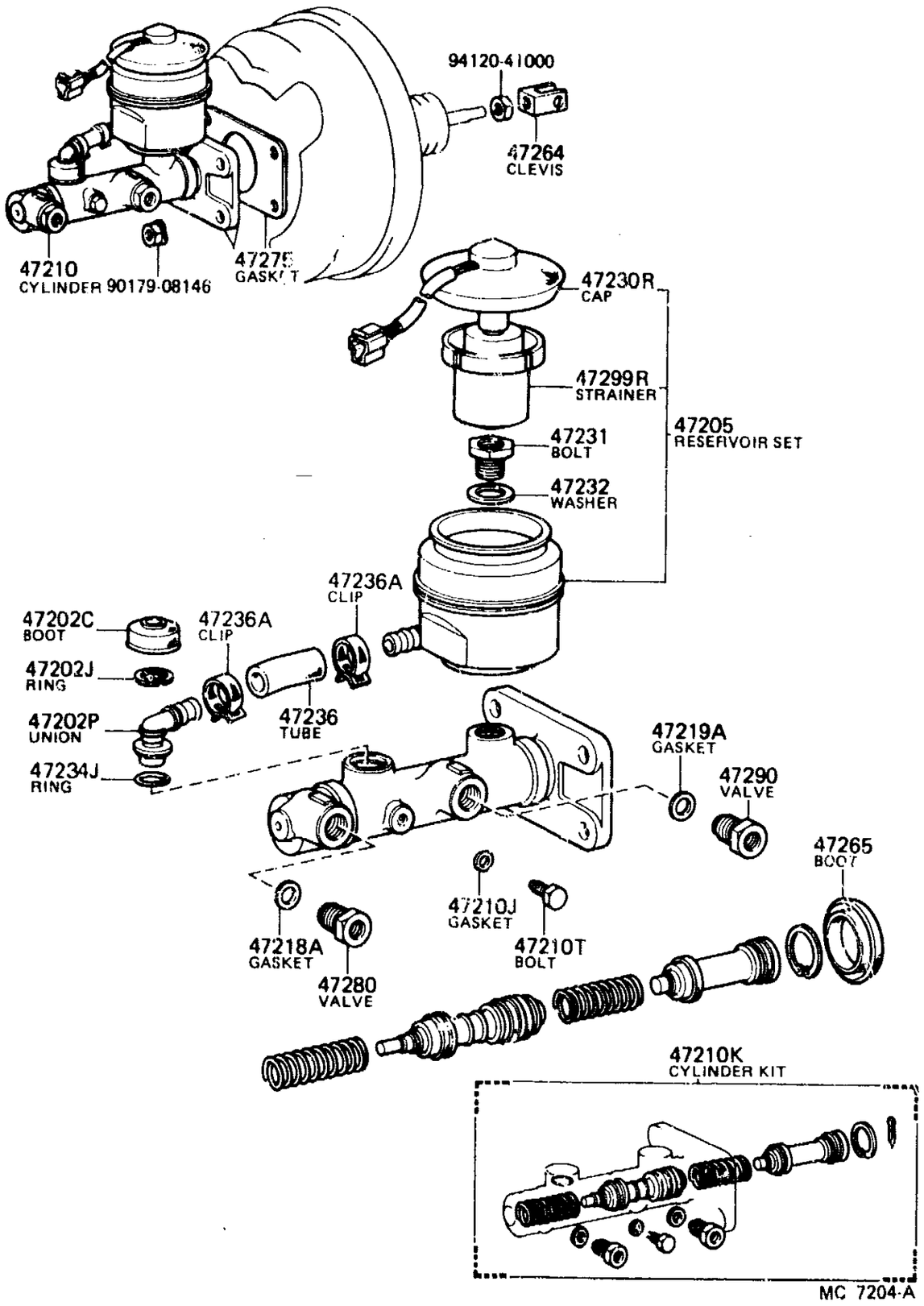

MC 7204-A

(8411-8510)BJ60; (8504-)FJ60; (8510-)HJ60

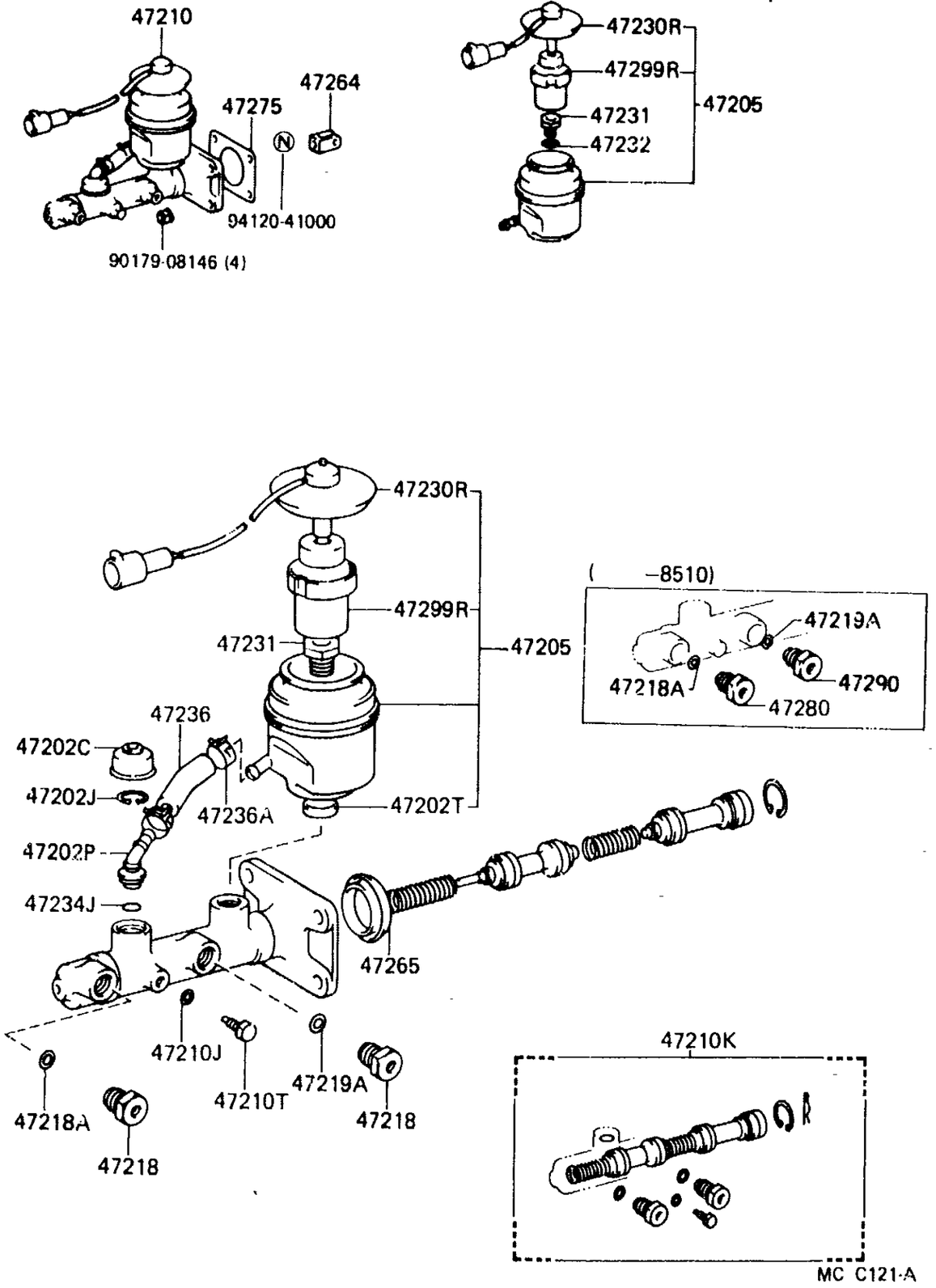

MC C121-A

PROD.DATE	MODELS	DESCRIPTION	R/P	PART NUMBER	QTY	REV.REF.CODE FROM	REV.REF.CODE UP TO
FIG•	47-02 BRAKE MASTER CYLINDER						
	47202C BOOT, RESERVOIR, NO.1 (FOR BRAKE MASTER CYLINDER SIDE)						
8008-	BJ60,HJ60,FJ60			47265-20060-	1	455	
	47202J RING, SNAP (FOR BRAKE MASTER CYLINDER SIDE)		C				
8008-	BJ60,HJ60,FJ60			96151 02000-	1	455	
	47202P UNION, RESERVOIR (FOR BRAKE MASTER CYLINDER SIDE)						
8504-8510	BJ60			90407-10003-	1	555	566
8008-8504	BJ60,FJ60				1	455	554
8504-	HJ60,FJ60			90407-10004-	1	555	
	47202T RING (FOR BRAKE MASTER CYLINDER RESERVOIR, NO.1)						
8504-	HJ60,FJ60			90562-18151-	1	555	
	47205 RESERVOIR SET, BRAKE MASTER CYLINDER (FOR REAR SIDE)						
8504-8510	BJ60			47202-60040-	1	555	566
8008-8504	BJ60,FJ60				1	455	554
8504-	HJ60,FJ60			47202-60090-	1	555	
	47210 CYLINDER ASSY, MASTER, W/O BOOSTER						
8411-8510	BJ60			47201-60220-	1	515	566
8008-8411	BJ60,FJ60			# 47201-60130- (47201-60220-)	1	455	514
8411-8504	FJ60				1	515	554
8504-	HJ60,FJ60			47201-60340-	1	555	
	47210J GASKET (FOR MASTER CYLINDER)						
8008-	BJ60,HJ60,FJ60			90430-06104-	1	455	
	47210K CYLINDER KIT, BRAKE MASTER						
8411-8510	BJ60			04493-60090-	1	515	566
8008-8411	BJ60,FJ60			04493-60070-	1	455	514
8411-8504	FJ60				1	515	554
8504-	HJ60,FJ60			04493-60160-	1	555	

PROD.DATE	MODELS	DESCRIPTION	R/P	PART NUMBER	QTY	REV.REF.CODE FROM	REV.REF.CODE UP TO
	47210T BOLT (FOR BRAKE MASTER CYLINDER)						
8008-	BJ60,HJ60,FJ60			90109-06008-	1	455	
	47218 PLUG, MASTER CYLINDER FLUID OUTLET						
8510-	HJ60,FJ60			47218-12040-	2	567	
	47218A GASKET (FOR FLUID OUTLET PLUG)						
8008-	BJ60,HJ60,FJ60			90430-09253-	1	455	
	47219A GASKET (FOR FLUID OUTLET PLUG REAR SIDE)						
8008-	BJ60,HJ60,FJ60			90430-09253-	1	455	
	47230R CAP ASSY, RESERVOIR, NO.2 (FOR REAR SIDE)						
8008-	BJ60,HJ60,FJ60			84460-22010-	1	455	
	47231 BOLT, BRAKE MASTER CYLINDER RESERVOIR SET						
8504-8510	BJ60			47231-30010-	1	555	566
8008-8504	BJ60,FJ60				1	455	554
8504-	HJ60,FJ60			47231-20010-	1	555	
	47232 WASHER, BRAKE RESERVOIR SET BOLT						
8008-	BJ60,FJ60			47232-30010-	1	455	
	47234J RING, O (FOR RESERVOIR TUBE)						
8008-	BJ60,HJ60,FJ60			90301-14001-	1	455	
	47236 TUBE, RESERVOIR BRAKE						
8008-	BJ60,HJ60,FJ60			47234-14010-	1	455	
	47236A CLIP (FOR RESERVOIR TUBE)						
8008-	BJ60,HJ60,FJ60			90467-16001-	2	455	
	47264 CLEVIS, MASTER CYLINDER PUSH ROD						
8008-	BJ60,HJ60,FJ60			47264-22010-	1	455	
	47265 BOOT, MASTER CYLINDER						
8008-	BJ60,HJ60,FJ60			47265-20050-	1	455	

	PROD.DATE	MODELS	DESCRIPTION	R/P	PART NUMBER	QTY	REV.REF.CODE FROM	REV.REF.CODE UP TO
		47275 GASKET, BRAKE MASTER CYLINDER						
	8008-	BJ60,HJ60,FJ60			47275-22010-	1	455	
		47280 VALVE ASSY, BRAKE MASTER CYLINDER OUTLET CHECK						
	8504-8510	BJ60			47280-30030-	1	555	566
	8008-8504	BJ60,FJ60				1	455	554
C	8504-8510	FJ60			47280-14010-	1	555	566
		47290 VALVE ASSY, MASTER CYLINDER OUTLET (FOR REAR SIDE)						
	8504-8510	BJ60			47280-30030-	1	555	566
	8008-8504	BJ60,FJ60				1	455	554
C	8504-8510	FJ60			47280-14010-	1	555	566
		47299R STRAINER MASTER CYLINDER RESERVOIR, REAR						
	8008-8204	BJ60,FJ60			47299-20010-	1	455	
	8204-	BJ60,HJ60,FJ60			47299-14010-	1		

PROD.DATE	MODELS	DESCRIPTION	R/P	PART NUMBER	QTY	REV.REF.CODE FROM	REV.REF.CODE UP TO

(8008-8411)BJ60

ILLUST.NO. 10F2

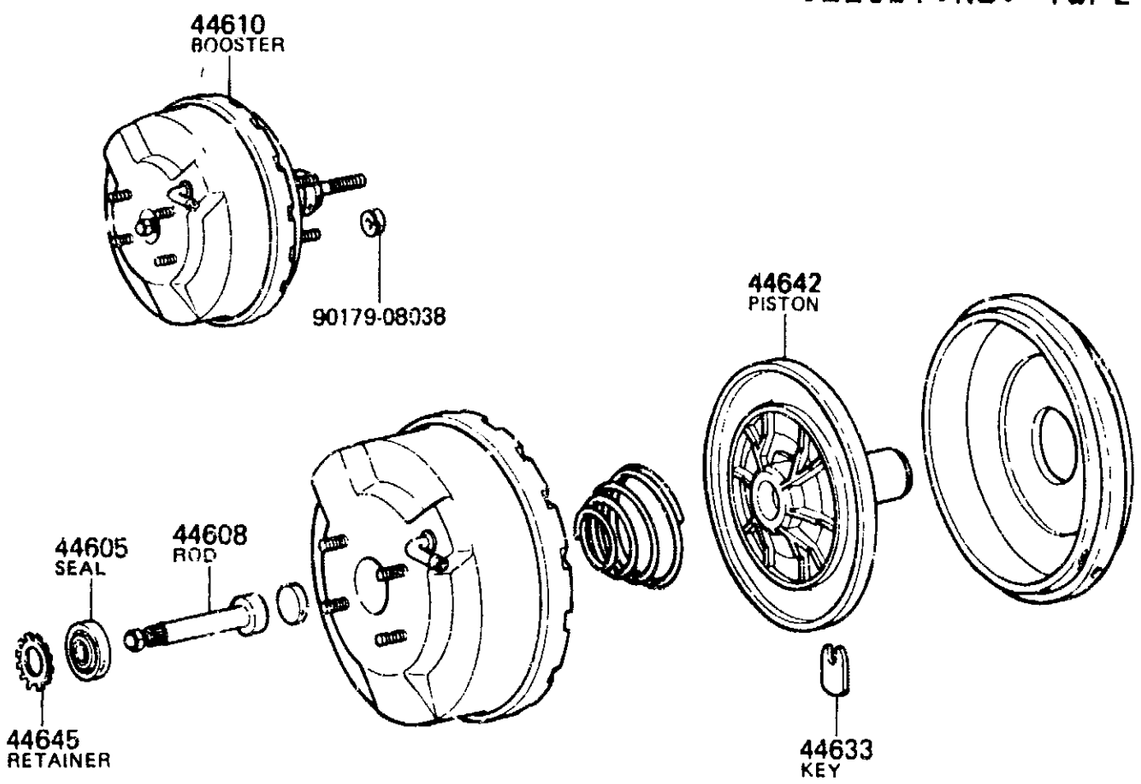

44610K
BOOSTER KIT

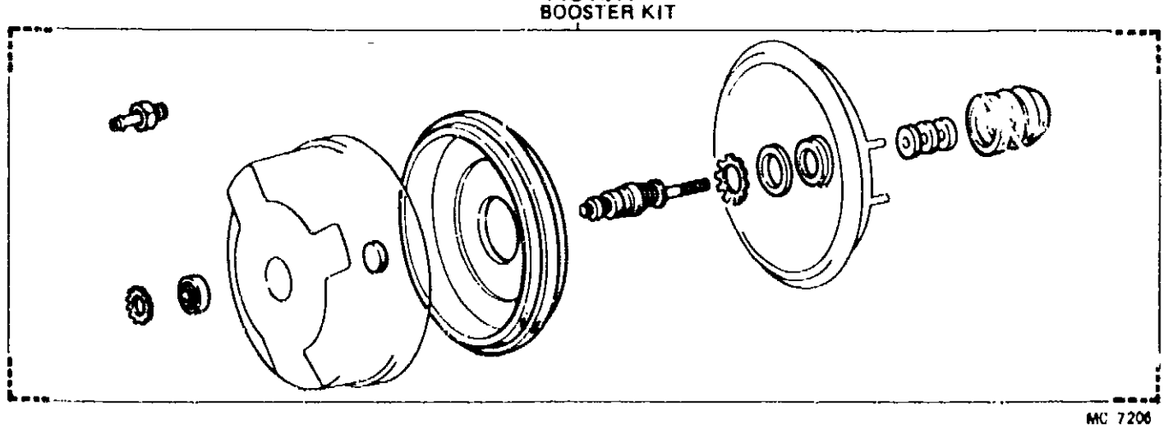

MC 7206

(8411-)BJ60,HJ60

ILLUST.NO. 10F2

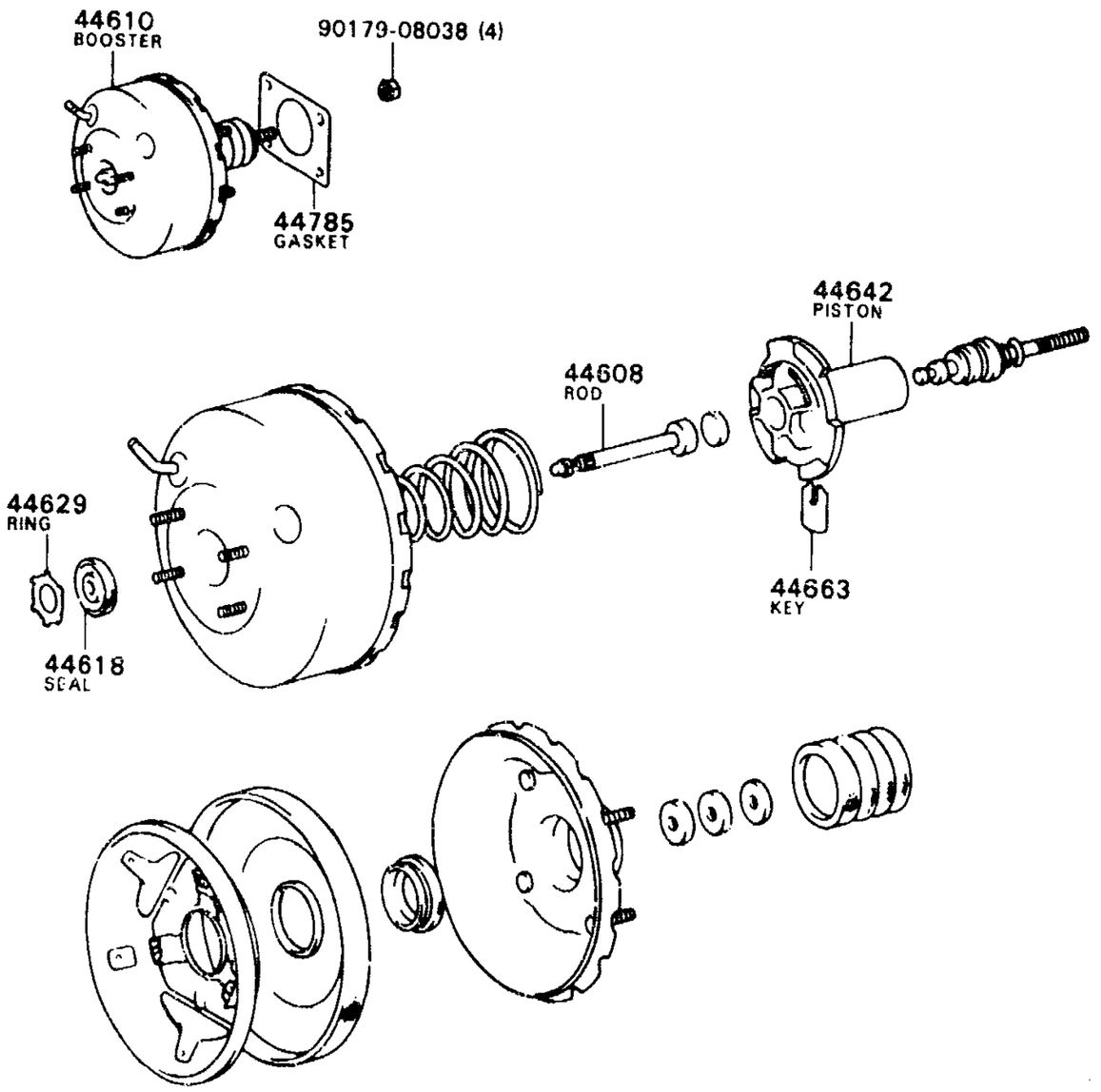

44610K
BOOSTER KIT

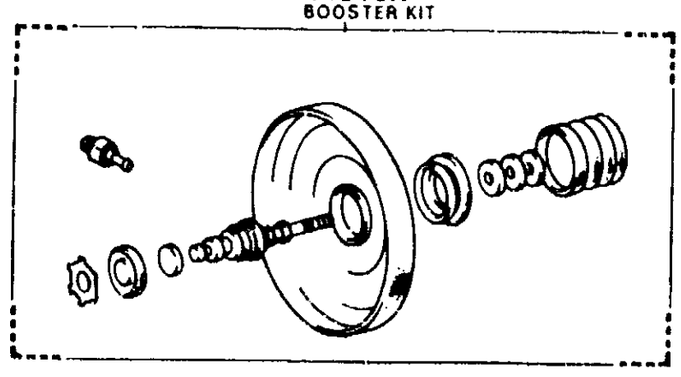

MC 8821

(8008-)FJ60

ILLUST•NO• 1OF2

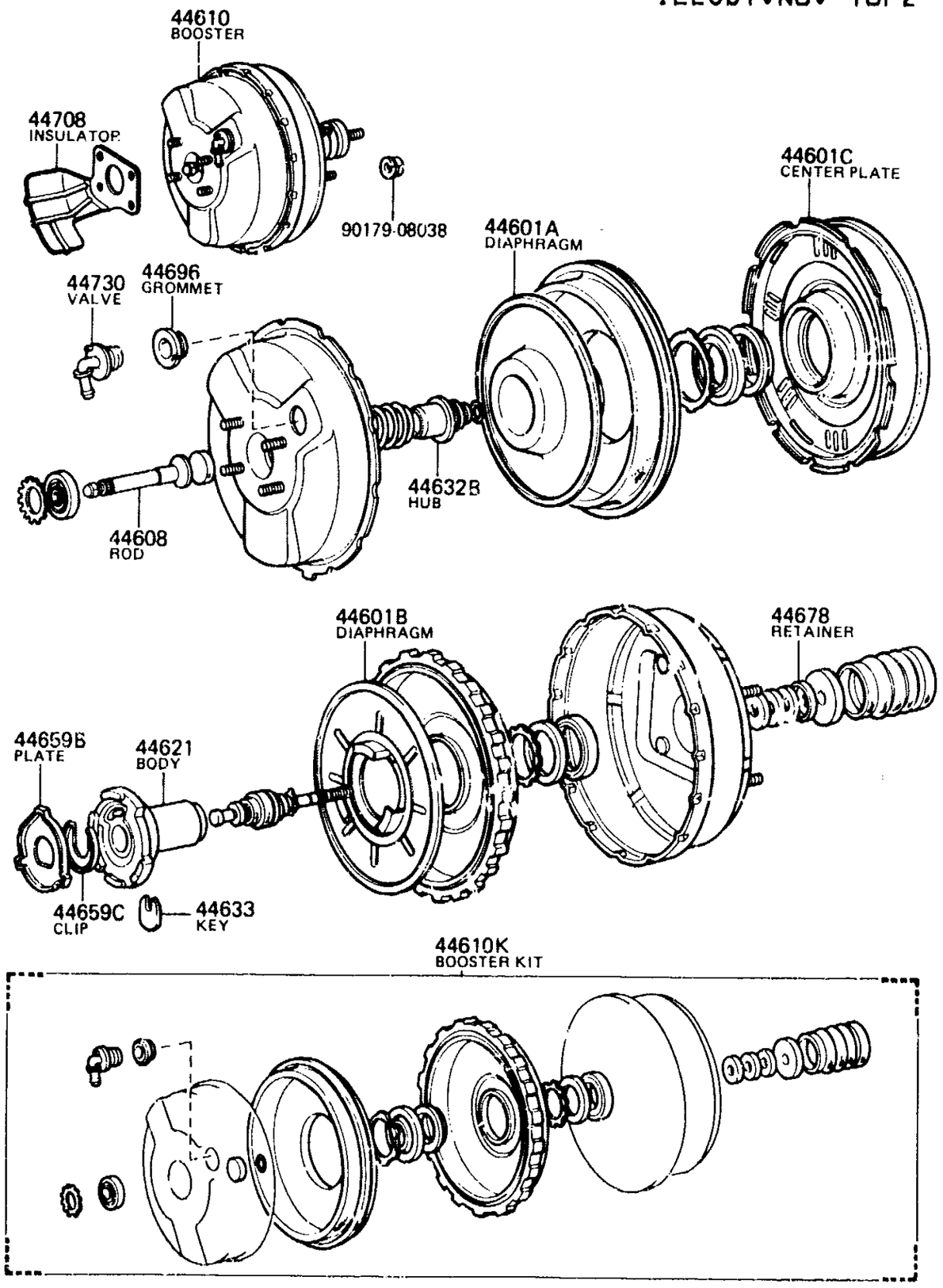

(8008-8510)BJ60

ILLUST•NO• 2OF2

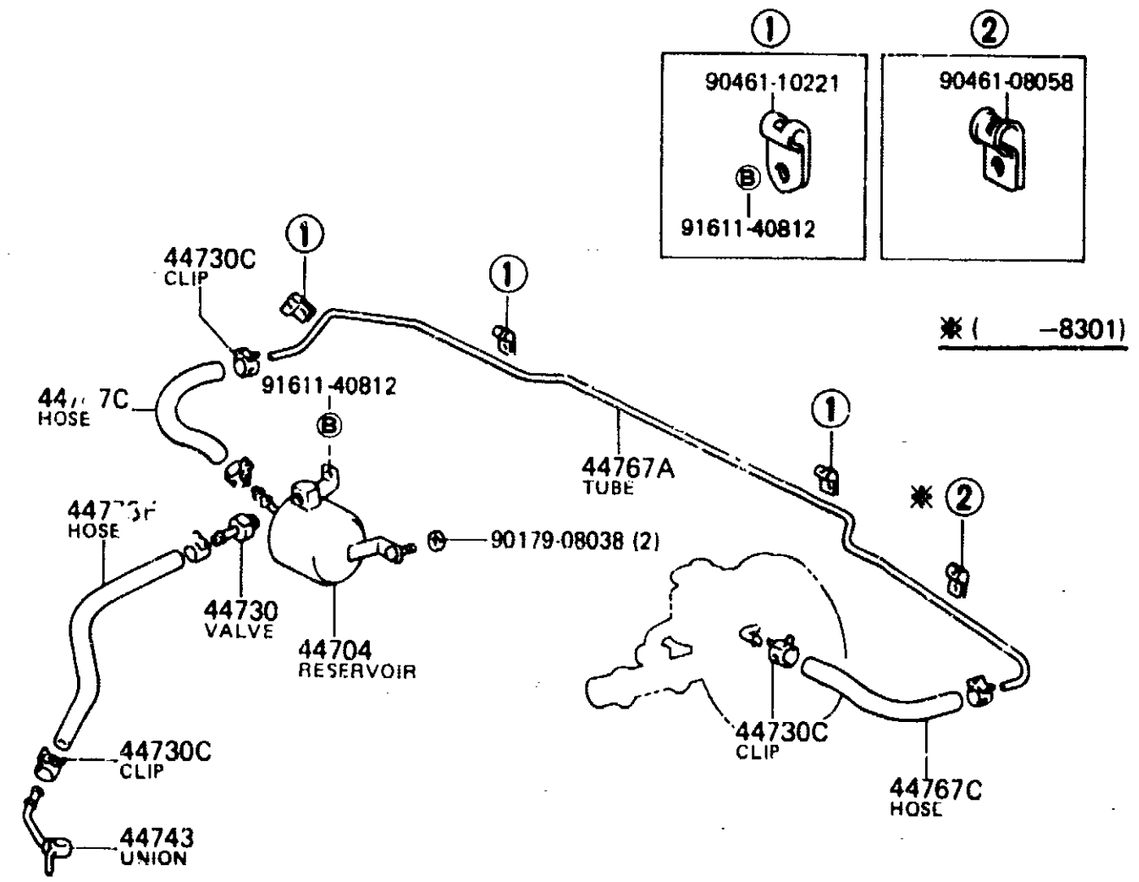

W/ CLUTCH BOOSTER

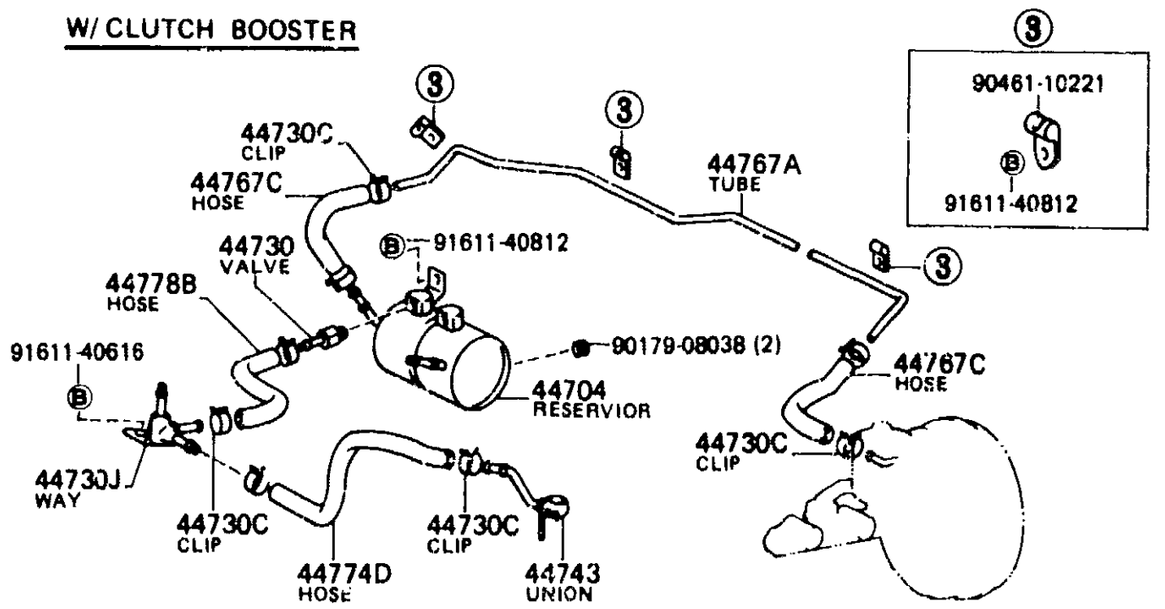

(8008–)FJ60

ILLUST•NO• 2OF2

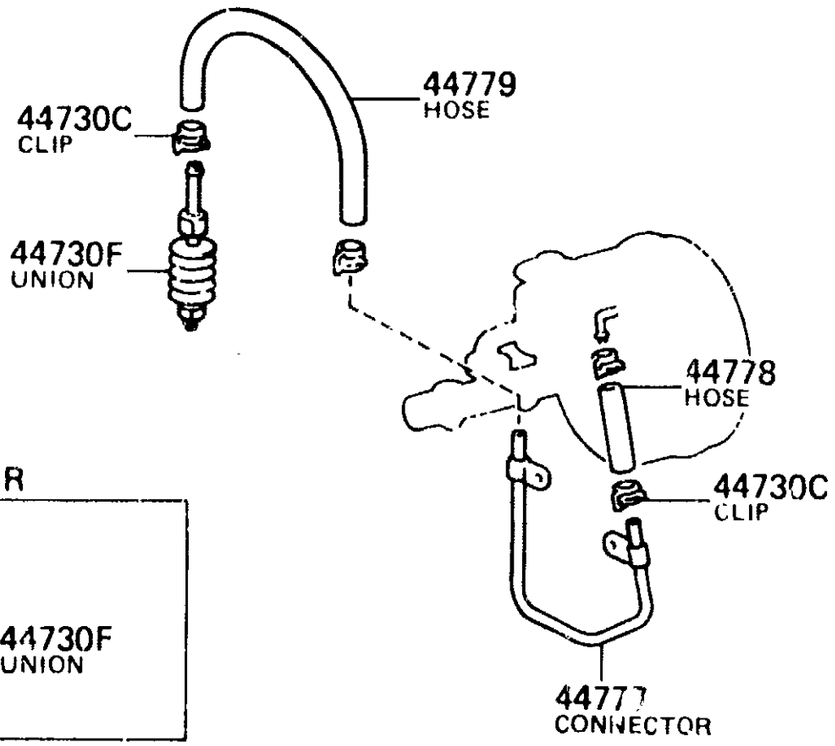

W/COOLER

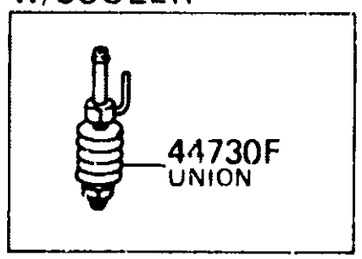

MC 8997-A

(8510–)HJ60

ILLUST•NO• 2OF2

(– 8601)
(8601–) MTM

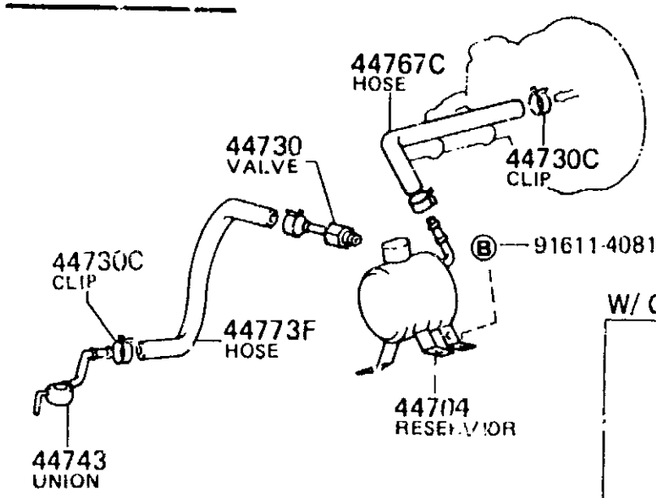

W/ CLUTCH BOOSTER

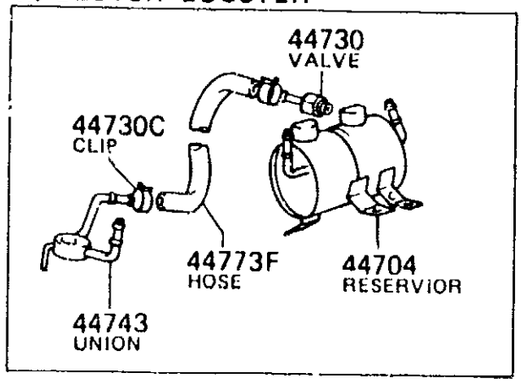

(8601–) ATM

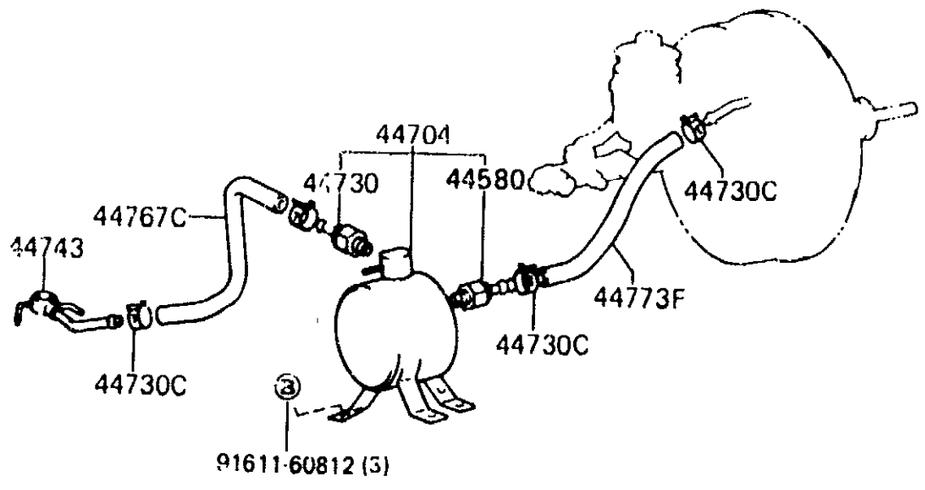

MC C993-A

GENUINE TOYOTA PARTS

	PROD.DATE	MODELS	DESCRIPTION	R/P	PART NUMBER	QTY	REV.REF.CODE FROM	REV.REF.CODE UP TO
	FIG. 47-03 BRAKE BOOSTER							
		44580	VALVE ASSY, ACTUATOR CHECK					
C	8601-	HJ60••ATM			44580-22030-	1		
		44601A	DIAPHRAGM PLATE SUB-ASSY, BOOSTER FRONT					
	8008-	FJ60			44609-30350-	1	455	
		44601B	DIAPHRAGM PLATE SUB-ASSY, BOOSTER REAR					
	8008-	FJ60			44601-30350-	1	455	
		44601C	CENTER PLATE SUB-ASSY, BOOSTER					
	8008-	FJ60			44606-30350-	1	455	
		44605	PLATE & SEAL SUB-ASSY, BOOSTER					
	8008-8510	BJ60			44605-22021-	1	455	566
		44608	PUSH ROD SUB-ASSY, BOOSTER					
	8008-8411	BJ60			44608-22090-	1	455	514
	8411-	BJ60,HJ60			44606-12520-	1	515	
	8008-	FJ60			44608-30350-	1	455	
		44610	BOOSTER ASSY, BRAKE					
	8008-8301	BJ60			44610-60150-	1	455	482
	8301-8411	BJ60			44610-60151-	1	483	514
	8411-8510	BJ60			44610-60400-	1	515	566
	8008-8504	FJ60			44610-60100-	1	455	554
C	8504-8603	FJ60			44610-60440-	1	555	
C	8603-	FJ60			44610-60441-	1		
	8510-	HJ60			44610-60421-	1	567	
		44610K	BOOSTER KIT, BRAKE					
	8008-8411	BJ60			04443-60110-	1	455	514
	8411-8510	BJ60			04443-60240-	1	515	566
	8008-8504	FJ60			04443-60080-	1	455	554
C	8504-8603	FJ60			04443-60270-	1	555	
C	8603-	FJ60			04443-60271-	1		

	PROD.DATE	MODELS	DESCRIPTION	R/P	PART NUMBER	QTY	REV.REF.CODE FROM	REV.REF.CODE UP TO
		44610K	BOOSTER KIT, BRAKE CONTINUED					
	8510-	HJ60			04443-60241-	1	567	
		44618	SEAL, BOOSTER BODY					
	8411-	BJ60,HJ60			44621-28120-	1	515	
		44621	BODY, BOOSTER VALVE					
	8008-	FJ60			44673-30350-	1	455	
		44629	RING, CIRCULAR INTERNAL					
	8411-	BJ60,HJ60			44628-28120-	1	515	
		44632B	HUB, BOOSTER REACTION DISK					
C	8008-8603	FJ60			44632-60100-	1	455	
C	8603-	FJ60			44632-60441-	1		
		44633	KEY, BOOSTER VALVE PLUNGER					
	8008-8510	BJ60			44633-22020-	1	455	566
	8008-	FJ60			44633-30350-	1	455	
		44642	PISTON, BRAKE BOOSTER					
	8008-8411	BJ60			44642-25080-	1	455	514
	8411-	BJ60,HJ60			44642-60280-	1	515	
		44645	RETAINER, BOOSTER PUSH ROD SEAL					
	8008-8510	BJ60			44645-22020-	1	455	566
		44659B	PLATE, BOOSTER RETAINER					
	8008-	FJ60			44658-30350-	1	455	
		44659C	CLIP, BOOSTER					
	8008-	FJ60			44659-30350-	1	455	
		44663	KEY, VALVE STOPPER					
	8411-	BJ60,HJ60			44635-28120-	1	515	
		44678	RETAINER, BOOSTER AIR CLEANER					
	8008-	BJ60,FJ60			44678-22020-	1	455	

	PROD.DATE	MODELS	DESCRIPTION	R/P	PART NUMBER	QTY	REV.REF.CODE FROM	REV.REF.CODE UP TO
		44696 GROMMET, CHECK VALVE						
	8008-	FJ60			90480-24517-	1	455	
		44704 RESERVOIR SUB-ASSY, VACUUM						
	8008-8510	BJ60			44704-60050-	1	455	566
	8301-8510	BJ60	W/CLUTCH BOOSTER		44704-60060-	1	483	566
C	8510-8601	HJ60			44704-60140-	1	567	
C	8601-	HJ60••ATM			44704-60160-	1		
	8510-	HJ60••MTM	W/CLUTCH BOOSTER		44704-60130-	1	567	
C	8601-	HJ60••MTM			44704-60140-	1		
		44708 INSULATOR SUB-ASSY, BRAKE BOOSTER HEAT						
	8008-	FJ60			44786-60030-	1	455	
		44730 VALVE ASSY, VACUUM CHECK (FOR BRAKE)						
	8008-	BJ60,HJ60			44730-60040-	1	455	
	8008-8504	FJ60			44730-22050-	1	455	554
	8504-	FJ60			44730-22090-	1	555	
		44730C CLIP (FOR VACUUM HOSE)						
	8411-8504	BJ60			90467-16002-	6	515	554
	8008-8411	BJ60,FJ60			90467-16141-	8	455	514
	8504-	BJ60,HJ60,FJ60			90467-16002-	6	555	
	8411-8504	FJ60			90467-16141-	8	515	554
		44730F UNION, VACUUM HOSE (FOR MANIFOLD SIDE)						
	8008-8504	FJ60			90404-51037-	1	455	554
	8504-	FJ60			90404-51031-	1	555	
C	8008-	FJ60••WGG	W/COOLER		90404-51038-	1	455	
		44730J WAY (FOR BOOSTER VACUUM)						
	8301-8510	BJ60			90413-09024-	1	483	566
		44743 UNION (FOR VACUUM PUMP)						
	8008-8510	BJ60			90405-09026-	1	455	566

	PROD.DATE	MODELS	DESCRIPTION	R/P	PART NUMBER	QTY	REV.REF.CODE FROM	REV.REF.CODE UP TO
		44743 UNION (FOR VACUUM PUMP) CONTINUED						
	8411-8510	BJ60	W/FR DRIVE OR COOLER		90405-09102-	1	515	566
C	8510-8601	HJ60••ATM			90405-09115-	1	567	
C	8601-	HJ60••ATM			90405-09116-	1		
	8510-	HJ60••MTM	W/FR DRIVE OR COOLER		90405-09115-	1	567	
	8510-	HJ60••MTM			90405-09116-	1	567	
		44767A TUBE, VACUUM RESERVOIR TO BRAKE BOOSTER						
	8008-8301	BJ60		#	44767-60020- (44777-60090-)	1	455	482
	8301-8411	BJ60			44777-60010-	1	483	514
	8411-8510	BJ60			44777-60080-	1	515	566
		44767C HOSE (FOR VACUUM RESERVOIR TO BRAKE BOOSTER)						
	8008-8211	BJ60	RESERVOIR SIDE	#	90445-17002- (95441-09200-)	1	455	
	8008-8211	BJ60	BOOSTER SIDE	#	90445-17895- (95441-09250-)	1	455	
	8211-8301	BJ60	BOOSTER SIDE	#	95441-09250- (95441-09270-)	1		482
	8211-8411	BJ60	RESERVOIR SIDE		95441-09200-	1		514
	8301-8411	BJ60	BOOSTER SIDE		44771-60020-	1	483	514
	8411-8510	BJ60	BOOSTER SIDE		44772-14032-	1	515	566
	8411-8510	BJ60	RESERVOIR SIDE		95441-09170-	1	515	566
	8510-	HJ60			44771-60040-	1	567	
		44773F HOSE, UNION TO CHECK VALVE						
	8008-8510	BJ60			90445-17855-	1	455	566
C	8510-	HJ60			44771-60040-	1	567	
		44774D HOSE, UNION TO WAY						
	8301-8510	BJ60			90445-17908-	1	483	566

PROD.DATE	MODELS	DESCRIPTION	R/P	PART NUMBER	QTY	REV.REF.CODE FROM	REV.REF.CODE UP TO
	44777 CONNECTOR, VACUUM HOSE						
8008-	FJ60			44763-600 0-	1	455	
	44778 HOSE, CONNECTOR TO CHECK VALVE						
8008-	FJ60			90445 17044--	1	455	
	44778B HOSE, WAY TO CHECK VALVE						
8301-8510	BJ60			95441-09240-	1	483	566
	44779 HOSE, UNION TO CONNECTOR						
8008-8504	FJ60			# 44773-22020- (44773-60060-)	1	455	554
8504-	FJ60			44773-60060-	1	555	
	44785 GASKET, BRAKE BOOSTER						
8411-8504	BJ60			44785-35020-	1	515	554
8504-	BJ60,HJ60,FJ60				1	555	

PROD.DATE	MODELS	DESCRIPTION	R/P	PART NUMBER	QTY	REV.REF.CODE FROM	REV.REF.CODE UP TO

FIG.47-05 FRONT DISC BRAKE CALIPER & DUST COVER

2-I 13

(8008-)

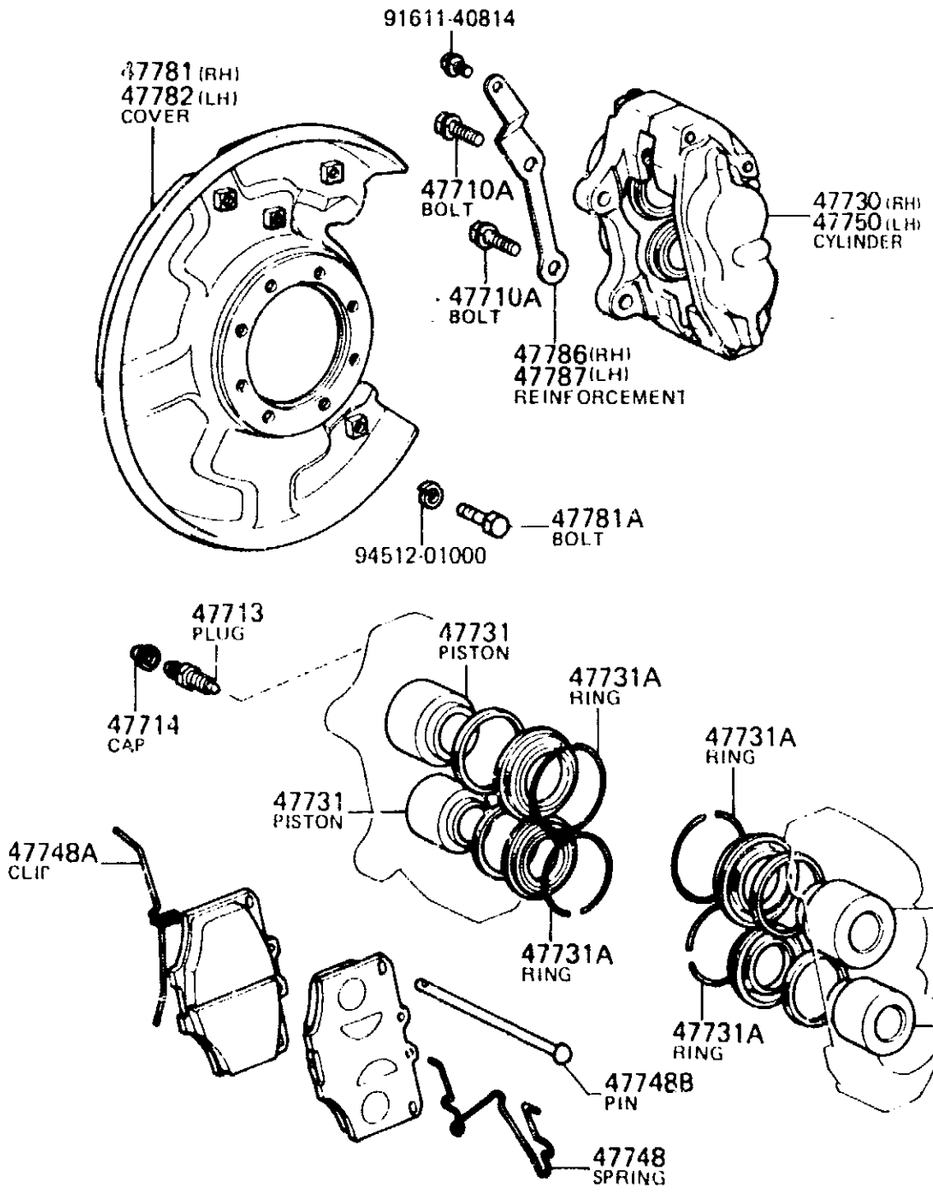

GENUINE TOYOTA PARTS

PROD.DATE	MODELS	DESCRIPTION	R/P	PART NUMBER	QTY	REV.REF.CODE FROM	REV.REF.CODE UP TO
FIG.	47-05 FRONT DISC BRAKE CALIPER & DUST COVER						
	47710A BOLT, HEXAGON (FOR FRONT CALIPER)						
8008-	BJ60,HJ60,FJ60			90101-12060-	4	455	
	47710K CYLINDER KIT, DISC BRAKE, FRONT						
8008-	BJ60,HJ60,FJ60			04479-30030-	1	455	
	47710L PAD KIT, DISC BRAKE, FRONT						
8008-	BJ60,HJ60,FJ60			04491-60010-	1	455	
	47713 PLUG, BLEEDER (FOR DISC BRAKE, FRONT)						
8008-	BJ60,HJ60,FJ60			47547-20030-	2	455	
	47714 CAP, BLEEDER PLUG (FOR DISC BRAKE, FRONT)						
8008-	BJ60,HJ60,FJ60			31478-30010-	2	455	
	47730 CYLINDER ASSY, DISC BRAKE, RH						
8008-	BJ60,HJ60,FJ60			47730-60021-	1	455	
	47731 PISTON, FRONT DISC BRAKE						
8008-	BJ60,HJ60,FJ60	OD=42.82		47731-30020-	4	455	
8008-	BJ60,HJ60,FJ60	OD=33.93		47732-30010-	4	455	
	47731A RING, SET (FOR FRONT DISC BRAKE PISTON)						
8008-	BJ60,HJ60,FJ60	PISTON OD=33.93		90522-40043-	4	455	
8008-	BJ60,HJ60,FJ60	PISTON OD=42.82		90522-48044-	4	455	
	47748 SPRING, ANTIRATTLE, NO.1						
8008-	BJ60,HJ60,FJ60			47748-60010-	2	455	
	47748A CLIP (FOR DISC BRAKE ANTIRATTLE)						
8008-	BJ60,HJ60,FJ60			90468-12003-	2	455	
	47748B PIN, W/HOLE (FOR DISC BRAKE ANTIRATTLE)						
8008-	BJ60,HJ60,FJ60			90240-06158-	4	455	

PROD.DATE	MODELS	DESCRIPTION	R/P	PART NUMBER	QTY	REV.REF.CODE FROM	REV.REF.CODE UP TO
	47750 CYLINDER ASSY, DISC BRAKE, LH						
8008-	BJ60,HJ60,FJ60			47750-60021-	1	455	
	47781 COVER, DISC BRAKE DUST, FRONT RH						
8008-	BJ60,HJ60,FJ60			47703-60020-	1	455	
	47781A BOLT (FOR DUST COVER TO STEERING KNUCKLE ARM SETTING)						
8008-	BJ60,HJ60,FJ60			90101-10439-	16	455	
	47782 COVER, DISC BRAKE DUST, FRONT LH						
8008-	BJ60,HJ60,FJ60			47704-60020-	1	455	
	47786 REINFORCEMENT, DUST COVER, RH						
8008-	BJ60,HJ60,FJ60			47786-60020-	1	455	
	47787 REINFORCEMENT, DUST COVER, LH						
8008-	BJ60,HJ60,FJ60			47787-60020-	1	455	

PROD.DATE	MODELS	DESCRIPTION	R/P	PART NUMBER	QTY	REV.REF.CODE FROM	REV.REF.CODE UP TO

FIG.47-06 REAR BACKING PLATE & WHEEL CYLINDER

2-K13

(8008-)

GENUINE TOYOTA PARTS

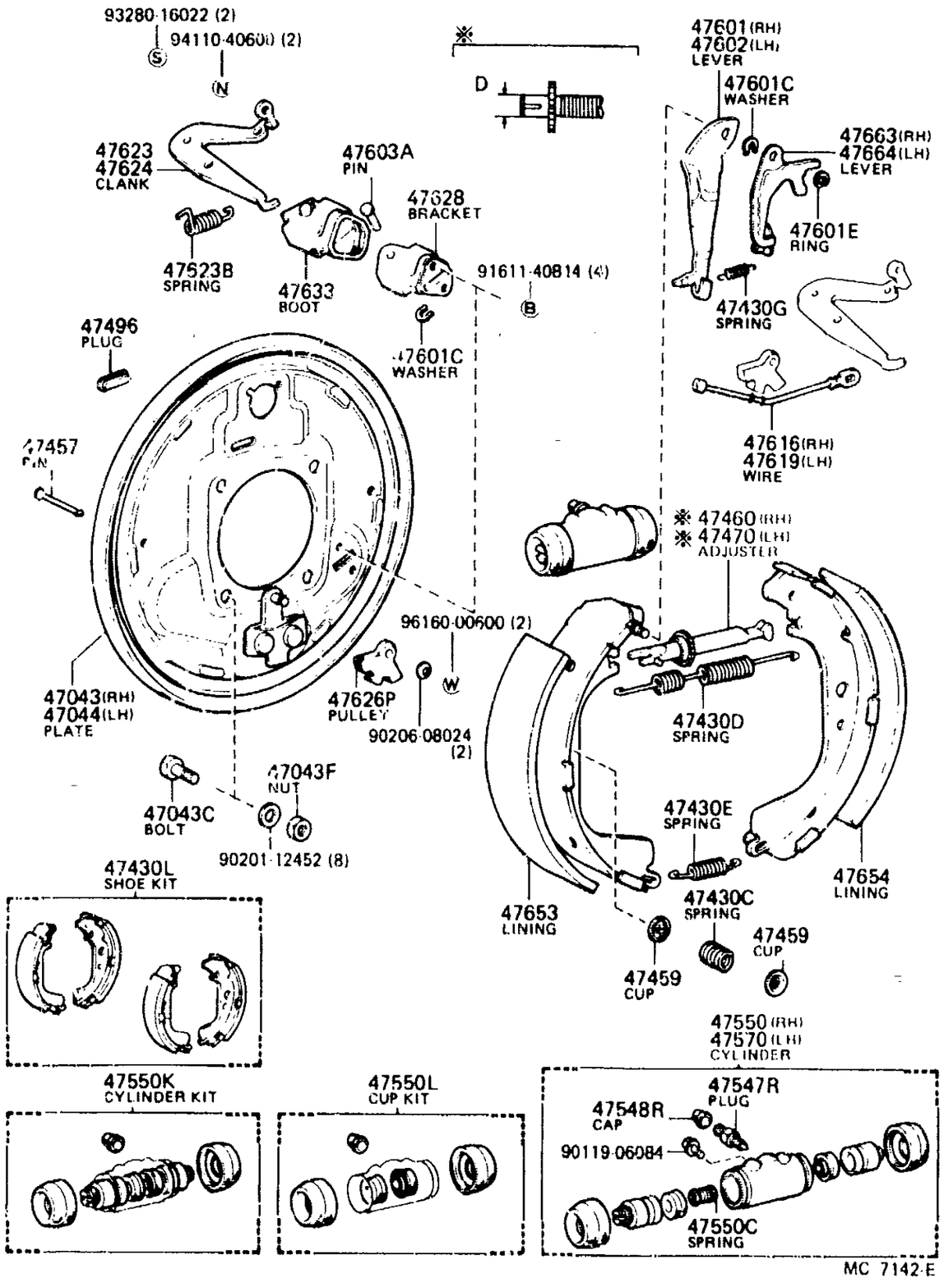

MC 7142-E

PROD.DATE	MODELS	DESCRIPTION	R/P	PART NUMBER	QTY	REV.REF.CODE FROM	REV.REF.CODE UP TO
FIG.	47-06 REAR BACKING PLATE & WHEEL CYLINDER						
	47043 PLATE SUB-ASSY, BRAKE BACKING, REAR RH						
8008-	BJ60,HJ60,FJ60			47043-60050-	1	455	
	47043C BOLT (FOR BACKING PLATE TO REAR AXLE HOUSING SETTING)						
8008-	BJ60,HJ60,FJ60			90101-12021-	8	455	
	47043F NUT (FOR BACKING PLATE TO REAR AXLE HOUSING SETTING)						
8008-	BJ60,HJ60,FJ60			94115-71200-	8	455	
	47044 PLATE SUB-ASSY, BRAKE BACKING, REAR LH						
8008-	BJ60,HJ60,FJ60			47044-60010-	1	455	
	47430C SPRING (FOR REAR BRAKE SHOE HOLD DOWN)						
8008-	BJ60,HJ60,FJ60			90501-20012-	4	455	
	47430D SPRING, TENSION (FOR REAR BRAKE SHOE RETURN)						
8411-8504	BJ60		RH	90506-26011-	1	515	554
8411-8504	BJ60		LH	90506-26014-	1	515	554
8008-8411	BJ60,FJ60			90506-26011-	2	455	514
8504-	BJ60,HJ60,FJ60		RH		1	555	
8504-	BJ60,HJ60,FJ60		LH	90506-26014-	1	555	
8411-8504	FJ60			90506-26011-	2	515	554
	47430E SPRING, TENSION (FOR REAR BRAKE SHOE RETURN)						
8008-	BJ60,HJ60,FJ60			90506-18031-	2	455	
	47430G SPRING, TORSION (FOR REAR BRAKE AUTOMATIC ADJUST LEVER)						
8008-	BJ60,HJ60,FJ60			90506-12031-	2	455	
	47430L SHOE KIT, REAR BRAKE						
8008-	BJ60,HJ60,FJ60			04495-60010-	1	455	
	47457 PIN, SHOE HOLD DOWN SPRING (FOR REAR BRAKE)						
8008-	BJ60,HJ60,FJ60			47447-60010-	4	455	

GENUINE TOYOTA PARTS

	PROD.DATE	MODELS	DESCRIPTION	R/P	PART NUMBER	QTY	REV.REF.CODE FROM	REV.REF.CODE UP TO
		47459 CUP, SHOE HOLD DOWN SPRING (FOR REAR BRAKE)						
	8008-	BJ60,HJ60,FJ60			47449-30020-	8	455	
		47460 ADJUSTER ASSY, SHOE, RH (FOR REAR BRAKE)						
	8008-8409	BJ60,FJ60	ADJUSTING BOLT:D=10	#	47061-60010- (47061-60011-)	1	455	558
	8409-	BJ60,HJ60,FJ60	ADJUSTING BOLT:D=12		47061-60011-	1	559	
		47470 ADJUSTER ASSY, SHOE, LH (FOR REAR BRAKE)						
	8008-8409	BJ60,FJ60	ADJUSTING BOLT:D=10	#	47062-60010- (47062-60011-)	1	455	558
	8409-	BJ60,HJ60,FJ60	ADJUSTING BOLT:D=12		47062-60011-	1	559	
		47496 PLUG, HOLE (FOR REAR BRAKE)						
	8008-	BJ60,HJ60,FJ60			47491-20011-	2	455	
		47547R PLUG, BLEEDER (FOR DRUM BRAKE, REAR)						
	8008-	BJ60,HJ60,FJ60			47547-60020-	2	455	
		47548R CAP, BLEEDER PLUG (FOR DRUM BRAKE, REAR)						
	8008-	BJ60,HJ60,FJ60			31478-30010-	2	455	
		47550 CYLINDER ASSY, REAR WHEEL BRAKE (FOR RH, FRONT OR UPPER)						
C	8008-8608	BJ60,HJ60,FJ60			47550-69105-	1	455	600
C	8608-	HJ60,FJ60			47550-60120-	1	601	
		47550C SPRING, COMPRESSION (FOR REAR WHEEL BRAKE CYLINDER)						
C	8008-	BJ60,HJ60,FJ60			47509-60010-	2	455	
		47550K CYLINDER KIT, REAR WHEEL						
	8008-	BJ60,HJ60,FJ60			04474-60010-	2	455	
		47550L CUP KIT, REAR WHEEL CYLINDER						
	8008-	BJ60,HJ60,FJ60			04476-60050-	2	455	
		47570 CYLINDER ASSY, REAR WHEEL BRAKE (FOR LH, FRONT OR UPPER)						
C	8008-8608	BJ60,HJ60,FJ60			47550-69105-	1	455	600

PROD.DATE	MODELS	DESCRIPTION	R/P	PART NUMBER	QTY	REV.REF.CODE FROM	REV.REF.CODE UP TO
	47570 CYLINDER ASSY, REAR WHEEL BRAKE (FOR LH, FRONT OR UPPER) CONTINUED						
8608-	HJ60,FJ60			47550-60120-	1	601	
	47601 LEVER SUB-ASSY, PARKING BRAKE SHOE, RH (FOR REAR BRAKE)						
8008-	BJ60,HJ60,FJ60			47611-60010-	1	455	
	47601C WASHER, C (FOR REAR BRAKE)						
8008-	BJ60,HJ60,FJ60	T=1.2		90213-06013-	2	455	
8008-	BJ60,HJ60,FJ60	T=1.6		90213-07010-	2	455	
	47601E RING, E (FOR REAR BRAKE)						
8008-	BJ60,HJ60,FJ60			96160-00500-	2	455	
	47602 LEVER SUB-ASSY, PARKING BRAKE SHOE, LH (FOR REAR BRAKE)						
8008-	BJ60,HJ60,FJ60			47612-60010-	1	455	
	47603A PIN, W/HOLE (FOR REAR BRAKE)						
8008-	BJ60,HJ60,FJ60			90249-08068-	2	455	
	47616 WIRE, PARKING BRAKE, RH						
8008-	BJ60,HJ60,FJ60			47616-60010-	1	455	
	47619 WIRE, PARKING BRAKE, LH						
8008-	BJ60,HJ60,FJ60			47616-60010-	1	455	
	47623 CRANK, PARKING BRAKE BELL, NO.1						
8008-	BJ60,HJ60,FJ60			47624-60010-	1	455	
	47623B SPRING, TENSION (FOR PARKING BRAKE BELL CRANK RETURN)						
8008-	BJ60,HJ60,FJ60			90506-20033-	4	455	
	47624 CRANK, PARKING BRAKE BELL, NO.2						
8008-	BJ60,HJ60,FJ60			47625-60010-	1	455	
	47626P PULLEY, PARKING BRAKE SEGMENTAL						
8008-	BJ60,HJ60,FJ60			47626-60010-	2	455	

PROD.DATE	MODELS	DESCRIPTION	R/P	PART NUMBER	QTY	REV.REF.CODE FROM	REV.REF.CODE UP TO
	47628 BRACKET, BELLCRANK						
8008-8212	BJ60,FJ60			# 47628-35010- (47628-35020-)	2	455	
8212-	BJ60,HJ60,FJ60			47628-35020-	2		
	47633 BOOT, PARKING BRAKE BELLCRANK						
8008-8212	BJ60,FJ60			# 47633-35010- (47633-35020-)	2	455	
8212-	BJ60,HJ60,FJ60			47633-35020-	2		
	47653 LINING, REAR BRAKE SHOE (FOR FRONT OR UPPER)						
8008-	BJ60,HJ60,FJ60			47655-60010-	2	455	
	47654 LINING, REAR BRAKE SHOE (FOR REAR OR LOWER)						
8008-	BJ60,HJ60,FJ60			47655-60010-	2	455	
	47663 LEVER, AUTOMATIC ADJUST, RH (FOR REAR BRAKE)						
8008-	BJ60,HJ60,FJ60			47643-60010-	1	455	
	47664 LEVER, AUTOMATIC ADJUST, LH (FOR REAR BRAKE)						
8008-	BJ60,HJ60,FJ60			47644-60010-	1	455	

GENUINE TOYOTA PARTS

PROD.DATE	MODELS	DESCRIPTION	R/P	PART NUMBER	QTY	REV.REF.CODE FROM	REV.REF.CODE UP TO

FIG.47-08 BRAKE TUBE & CLAMP

2-A14

MR4-11-0456

(8008-)BJ60,HJ60

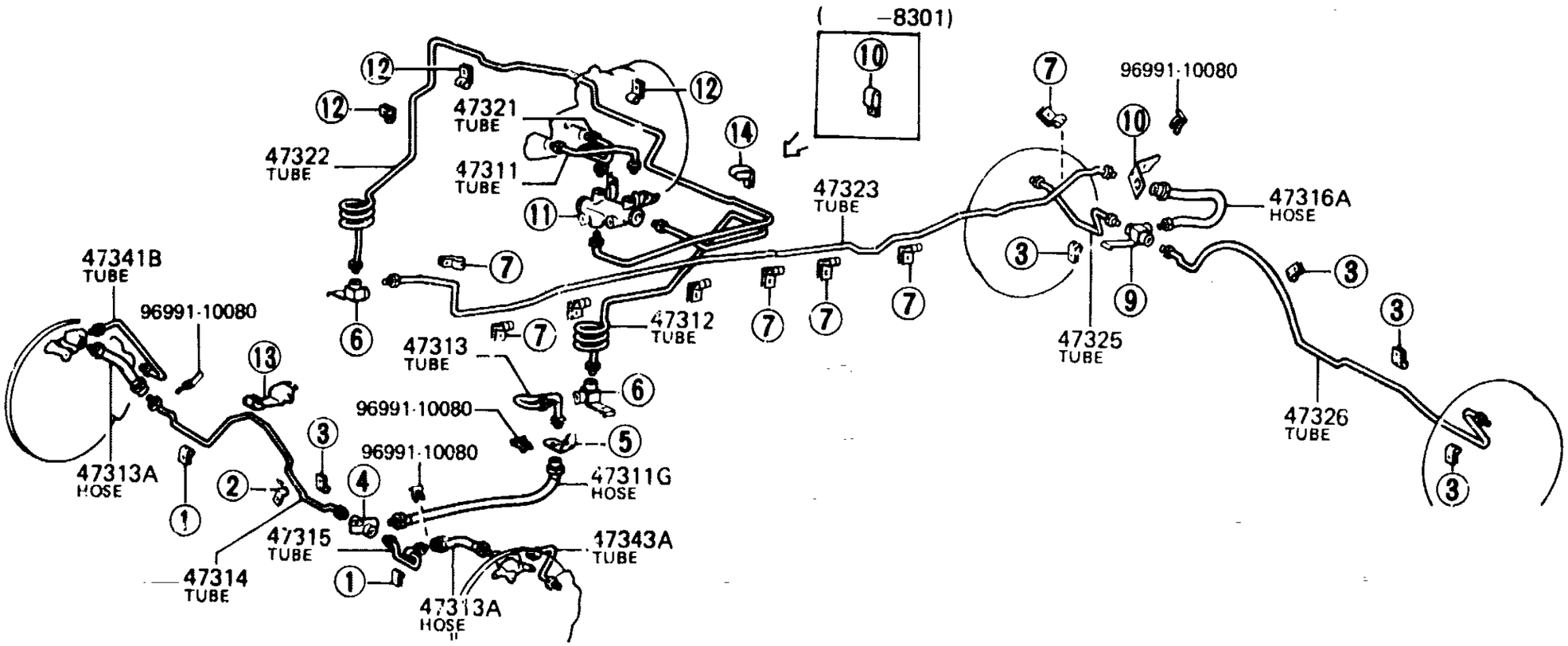

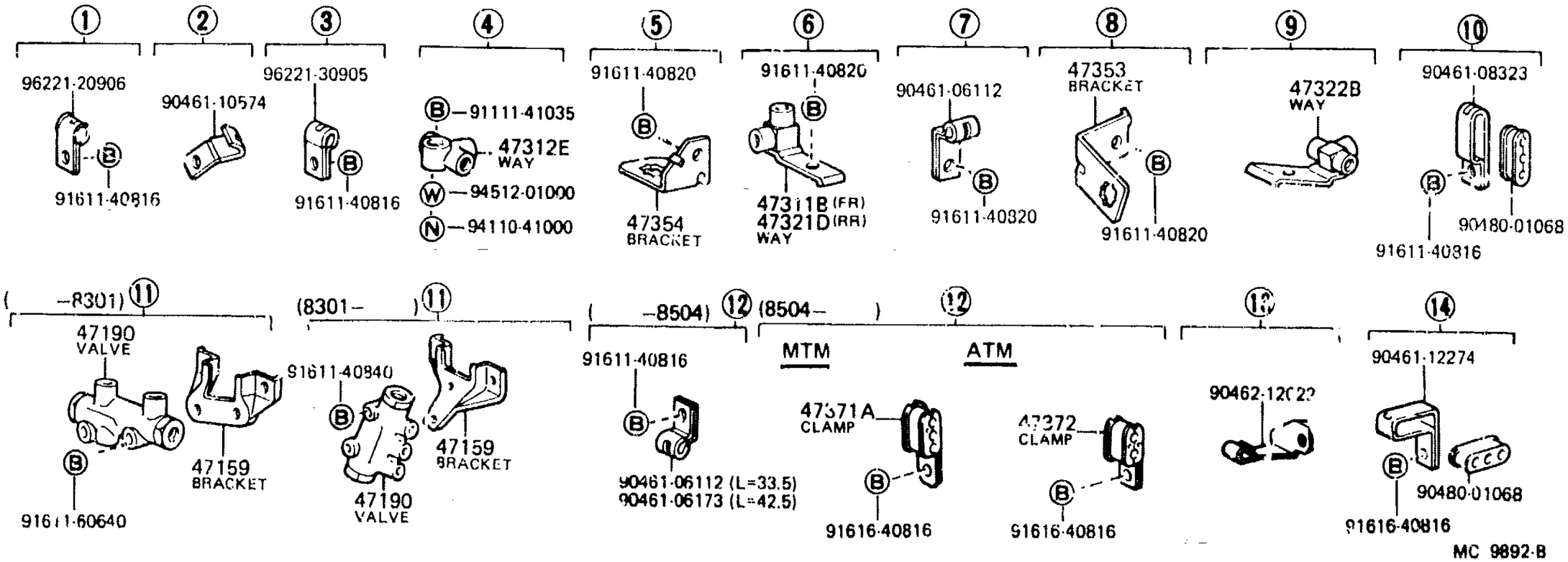

MC 9892-B

FIG.47-08 BRAKE TUBE & CLAMP

2-B14

MR4-11-0457

(8008-)FJ60

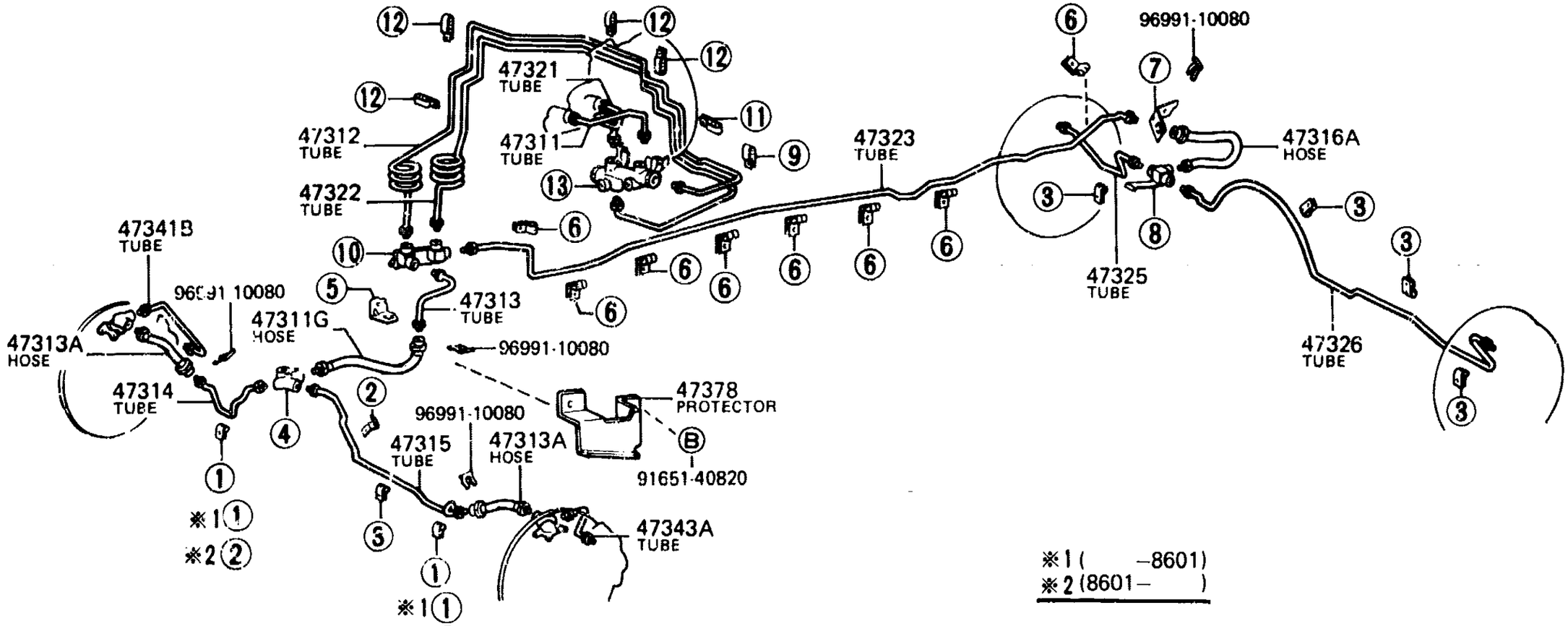

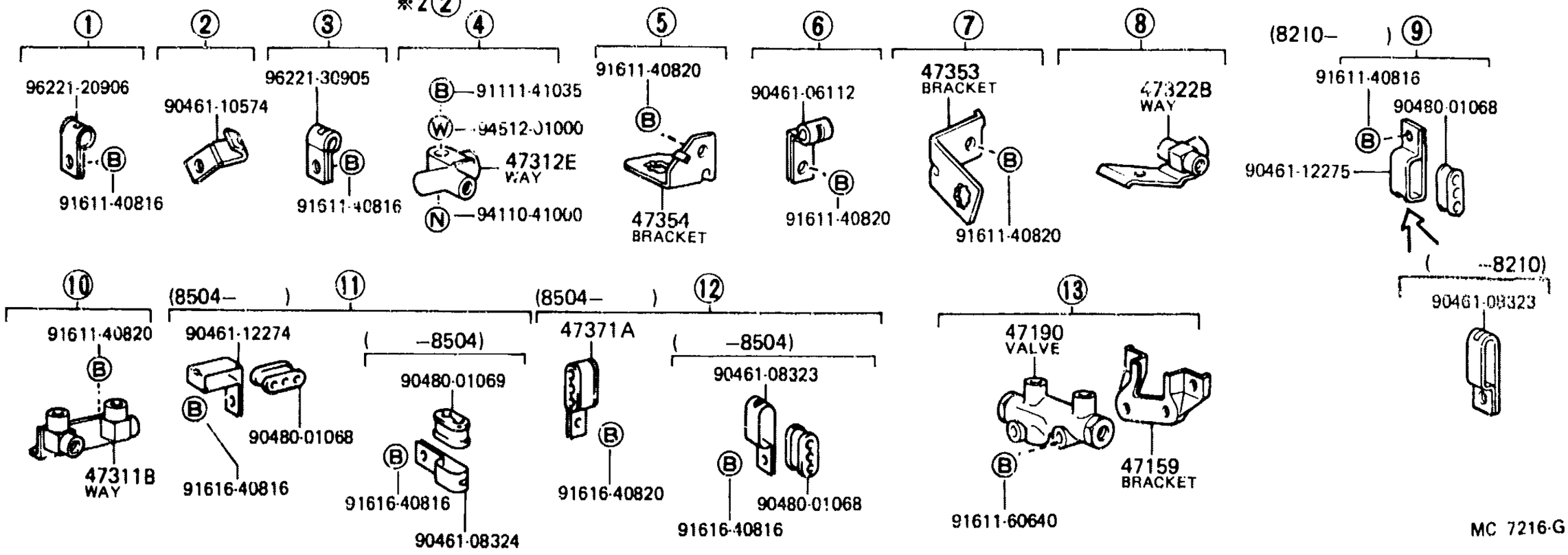

MC 7216-G

	PROD.DATE	MODELS	DESCRIPTION	R/P	PART NUMBER	QTY	REV.REF.CODE FROM	REV.REF.CODE UP TO
	FIG.	47-08 BRAKE TUBE & CLAMP						
		47155	BRACKET, PROPORTIONING VALVE					
	8301-8411	BJ60			47159-30100-	1	483	514
	8008-8301	BJ60,FJ60			47159-30110-	1	455	482
	8411-	BJ60,HJ60			47159-30150-	1	515	
	8301-	FJ60			47159-30110-	1		
		47190	VALVE ASSY, PROPORTIONING AND BY-PASS					
	8301-8411	BJ60			47190-30030-	1	483	514
	8008-8301	BJ60,FJ60			47190-14020-	1	455	482
	8411-	BJ60,HJ60			47190-60010-	1	515	
C	8301-8604	FJ60			47190-14020-	1		572
C	8604-	FJ60			47190-60020-	1	573	
		47311	TUBE, FRONT BRAKE, NO.1					
	8301-8411	BJ60			47311-30330-	1	483	514
	8008-8301	BJ60,FJ60			47311-30320-	1	455	482
	8411-	BJ60,HJ60			47311-30400-	1	515	
	8301-	FJ60			47311-30320-	1		
		47311B	WAY, NO.1 (FOR FRONT BRAKE TUBE)					
	8008-8411	BJ60			90412-10087-	1	455	514
	8411-8510	BJ60			90412-10125-	1	515	566
C	8008-	HJ60,FJ60			90414-10008-	1	455	
		47311G	HOSE, FLEXIBLE (FOR BRAKE TUBE)					
	8008-8510	BJ60			96940-34305-	1	455	566
C	8008-	BJ60,HJ60,FJ60			96940-33005-	1	455	
		47312	TUBE, FRONT BRAKE, NO.2					
	8008-8301	BJ60			47312-60290-	1	455	482
	8301-8411	BJ60			47312-60291-	1	483	514
	8411-8510	BJ60			47312-60292-	1	515	566
	8008-8504	FJ60			47312-60210-	1	455	554
	8504-	FJ60			47312-60211-	1	555	

	PROD.DATE	MODELS	DESCRIPTION	R/P	PART NUMBER	QTY	REV.REF.CODE FROM	REV.REF.CODE UP TO
		47312 CONTINUED	TUBE, FRONT BRAKE, NO.2					
	8510-	HJ60			47312-60442-	1	567	
		47312E	WAY, NO.2 (FOR FRONT BRAKE TUBE)					
	8008-8510	BJ60			90413-10031-	1	455	566
	8008-	HJ60,FJ60			90413-10042-	1	455	
		47313	TUBE, FRONT BRAKE, NO.3					
	8008-8411	BJ60			47313-60110-	1	455	514
	8411-8504	BJ60			47313-60111-	1	515	554
C	8504-	BJ60,HJ60,FJ60			47313-60091-	1	555	
	8008-8504	FJ60		#	47313-60090- (47313-60091-)	1	455	554
		47313A	HOSE, FLEXIBLE (FOR FRONT)					
	8008-	BJ60,HJ60,FJ60			96940-39855-	2	455	
		47314	TUBE, FRONT BRAKE, NO.4					
	8008-8411	BJ60			47315-60270-	1	455	514
	8411-8510	BJ60			47315-60271-	1	515	566
	8008-8504	FJ60			47315-60260-	1	455	554
C	8504-8601	HJ60,FJ60			47315-60261-	1	555	
C	8601-8608	HJ60,FJ60			47315-60262-	1		600
C	8608-	HJ60,FJ60			47315-60340-	1	601	
		47315	TUBE, FRONT BRAKE, NO.5					
	8008-8411	BJ60			47316-60150-	1	455	514
	8411-8510	BJ60			47316-60151-	1	515	566
	8008-8504	FJ60			47316-60140-	1	455	554
C	8504-8604	FJ60			47316-60141-	1	555	572
C	8510-8604	HJ60			47316-60210-	1	567	572
C	8604-8608	HJ60,FJ60			47316-60211-	1	573	600
C	8608-	HJ60,FJ60			47316-60310-	1	601	
		47316A	HOSE, FLEXIBLE (FOR REAR BRAKE TUBE)					
	8411-8504	BJ60			96940-33805-	1	515	554

GENUINE TOYOTA PARTS

	PROD.DATE	MODELS	DESCRIPTION	R/P	PART NUMBER	QTY	REV.REF.CODE FROM	REV.REF.CODE UP TO
		47316A HOSE, FLEXIBLE (FOR REAR BRAKE TUBE) CONTINUED						
	8008-8411	BJ60,FJ60			96940-33605-	1	455	514
	8504-	BJ60,HJ60,FJ60			96940-33805-	1	555	
	8411-8504	FJ60			96940-33605-	1	515	554
		47321 TUBE, REAR BRAKE, NO.1						
	8301-8411	BJ60			47321-30050-	1	483	514
	8008-8301	BJ60,FJ60			47321-60100-	1	455	482
	8411-	BJ60,HJ60			47321-30120-	1	515	
	8301-	FJ60			47321-60100-	1	483	
		47321D WAY, NO.1 (FOR REAR BRAKE TUBE)						
	8008-8411	BJ60			90412-10087-	1	455	514
	8411-8510	BJ60			90412-10124-	1	515	566
		47322 TUBE, REAR BRAKE, NO.2						
	8008-8301	BJ60			47322-60190-	1	455	482
	8301-8411	BJ60			47322-60191-	1	483	514
	8411-8510	BJ60			47322-60192-	1	515	566
	8008-8504	FJ60			47322-60110-	1	455	554
	8504-	FJ60			47322-60111-	1	555	
	8510-	HJ60			47322-60282-	1	567	
		47322B WAY, NO.2 (FOR REAR BRAKE TUBE)						
	8008-	BJ60,HJ60,FJ60			90413-10106-	1	455	
		47323 TUBE, REAR BRAKE, NO.3						
	8411-8504	BJ60			47323-60031-	1	515	554
	8006-8411	BJ60,FJ60			47323-60030-	1	455	514
	8504-	BJ60,HJ60,FJ60			47323-60031-	1	555	
	8411-8504	FJ60			47323-60030-	1	515	554
		47325 TUBE, REAR BRAKE, NO.5						
	8411-8510	BJ60			47325-60011-	1	515	566
	8008-8411	BJ60,FJ60			# 47325-60010- (47325-60011-)	1	455	514
C	8504-8608	HJ60,FJ60			47325-60011-	1	555	600
C	8608-	HJ60,FJ60			47325-60100-	1	601	
		47326 TUBE, REAR BRAKE, NO.6						
	8411-8510	BJ60			47326-60011-	1	515	566
	8008-8411	BJ60,FJ60			# 47326-60010- (47326-60011-)	1	455	514
	8411-8504	FJ60				1	515	554
C	8504-8608	HJ60,FJ60			47326-60011-	1	555	600
C	8608-	HJ60,FJ60			47326-60110-	1	601	
		47341B TUBE, WHEEL CYLINDER, FRONT RH NO.1						
	8008-8408	BJ60,FJ60			# 47341-60030- (47341-60031-)	1	455	
	8408-	BJ60,HJ60,FJ60			47341-60031-	1		
		47343A TUBE, WHEEL CYLINDER, FRONT LH NO.1						
	8008-8408	BJ60,FJ60			# 47343-60020- (47343-60021-)	1	455	
	8408-	BJ60,HJ60,FJ60			47343-60021-	1		
		47353 BRACKET, FLEXIBLE HOSE (FOR REAR)						
	8008-	BJ60,HJ60,FJ60			47355-60030-	1	455	
		47354 BRACKET, FRONT FLEXIBLE HOSE						
	8008-	BJ60,HJ60,FJ60			47354-60030-	1	455	
		47371A CLAMP, BRAKE TUBE, NO.1						
	8504-	HJ60,FJ60..MTM			47371-35020-	4	555	
		47372 CLAMP, BRAKE TUBE, NO.2						
	8510-	HJ60..ATM			47372-35010-	1	567	
		47378 PROTECTOR, BRAKE TUBE						
C	8008-8510	FJ60			47378-60040-	1	455	563

FIG.48-02 FRONT AXLE ARM & STEERING KNUCKLE

2-E14

MR4-13-0247

(8008-)

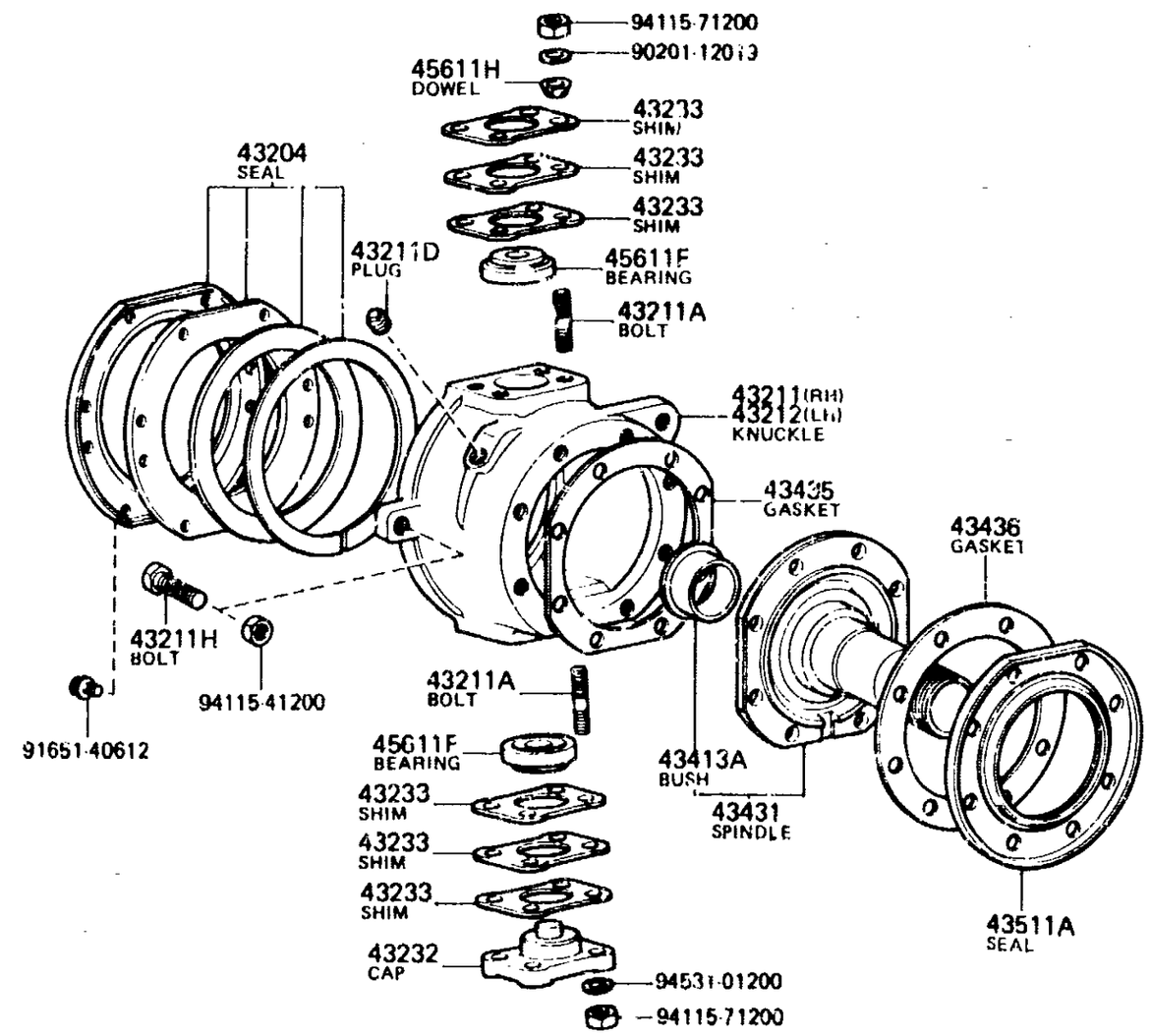

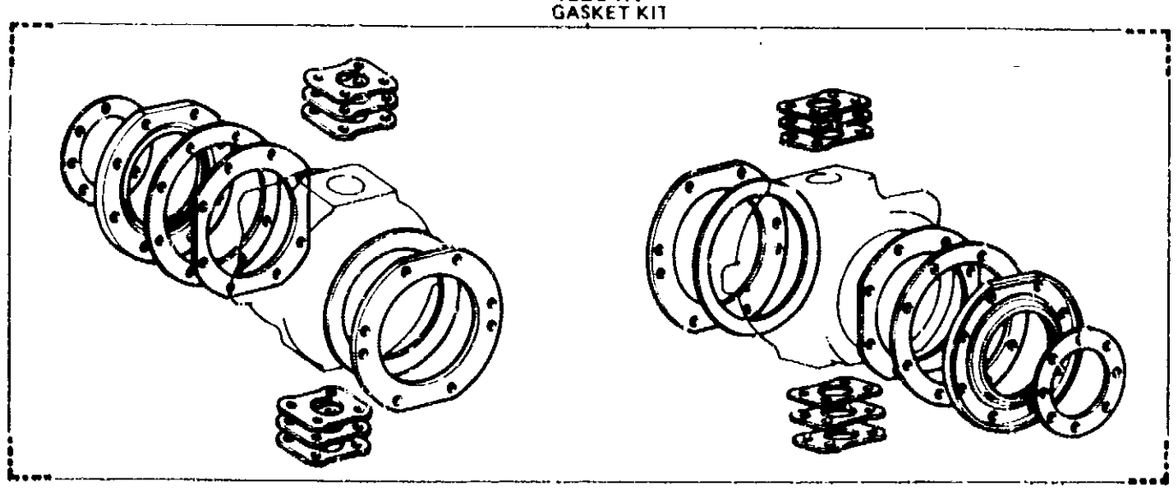

MC 7146

GENUINE TOYOTA PARTS

PROD.DATE	MODELS	DESCRIPTION	R/P	PART NUMBER	QTY	REV.REF.CODE FROM	REV.REF.CODE UP TO
FIG.	48-02 FRONT AXLE ARM & STEERING KNUCKLE						
	43204 SEAL SUB-ASSY, STEERING KNUCKLE OIL						
8008-	BJ60,HJ60,FJ60			43204-60020-	2	455	
	43204K GASKET KIT, FRONT AXLE OVERHAUL						
8008-	BJ60,HJ60,FJ60			04434-60012-	1	455	
	43211 KNUCKLE, STEERING, RH						
8008-	BJ60,HJ60,FJ60			43211-60050-	1	455	
	43211A BOLT, STUD (FOR STEERING SET)						
8008-	BJ60,HJ60,FJ60			90116-12007-	16	455	
	43211D PLUG (FOR STEERING KNUCKLE)						
8008-	BJ60,HJ60,FJ60			90345-53020-	2	455	
	43211H BOLT, ROUND HEXAGON						
8008-	BJ60,HJ60,FJ60			90106-12022-	4	455	
	43212 KNUCKLE, STEERING, LH						
8008-	BJ60,HJ60,FJ60			43212-60050-	1	455	
	43232 CAP, STEERING KNUCKLE BEARING						
8008-8410	BJ60,FJ60			# 43232-60021- (43232-35010-)	2	455	
8410-	BJ60,HJ60,FJ60			43232-35010-	2		
	43233 SHIM, STEERING KNUCKLE ADJUST, NO.1						
8008-	BJ60,HJ60,FJ60	T=0.2		43233-60011-	33	455	
8008-	BJ60,HJ60,FJ60	T=0.5		43234-60011-	33	455	
8008-	BJ60,HJ60,FJ60	T=1.0		43235-60010-	33	455	
8008-	BJ60,HJ60,FJ60	T=0.1		43236-60010-	33	455	
8109-	BJ60,HJ60,FJ60	T=0.3		43237-60030-	33		
	43413A BUSH, SOLID (FOR DRIVE SHAFT)						
8008-	BJ60,HJ60,FJ60			90999-70067-	2	455	

PROD.DATE	MODELS	DESCRIPTION	R/P	PART NUMBER	QTY	REV.REF.CODE FROM	REV.REF.CODE UP TO
	43431 SPINDLE, STEERING KNUCKLE						
8008-	BJ60,HJ60,FJ60			43401-60012-	2	455	
	43435 GASKET, KNUCKLE SPINDLE						
8008-	BJ60,HJ60,FJ60			43435-60011-	2	455	
	43436 GASKET, KNUCKLE SPINDLE OIL RETAINER						
8008-	BJ60,HJ60,FJ60			43436-60011-	2	455	
	43511A SEAL, DUST (FOR FRONT AXLE HUB)						
8008-	BJ60,HJ60,FJ60			90313-93011-	2	455	
	45611F BEARING (FOR STEERING KNUCKLE ARM)						
8008-8102	BJ60,FJ60			# 97610-30303- (90366-17001-)	4	455	
8102-	BJ60,HJ60,FJ60			90366-17001-	4		
	45611H DOWEL, SPLIT (FOR STEERING KNUCKLE ARM)						
8008-	BJ60,HJ60,FJ60			42323-60020-	8	455	

PROD.DATE	MODELS	DESCRIPTION	R/P	PART NUMBER	QTY	REV.REF.CODE FROM	REV.REF.CODE UP TO

FIG.48-03 FRONT SPRING & SHOCK ABSORBER

2-G14

MR4-11-0458

(8008-)WGG

(8008-)

ILLUST.NO. 10F3

ILLUST.NO. 20F3

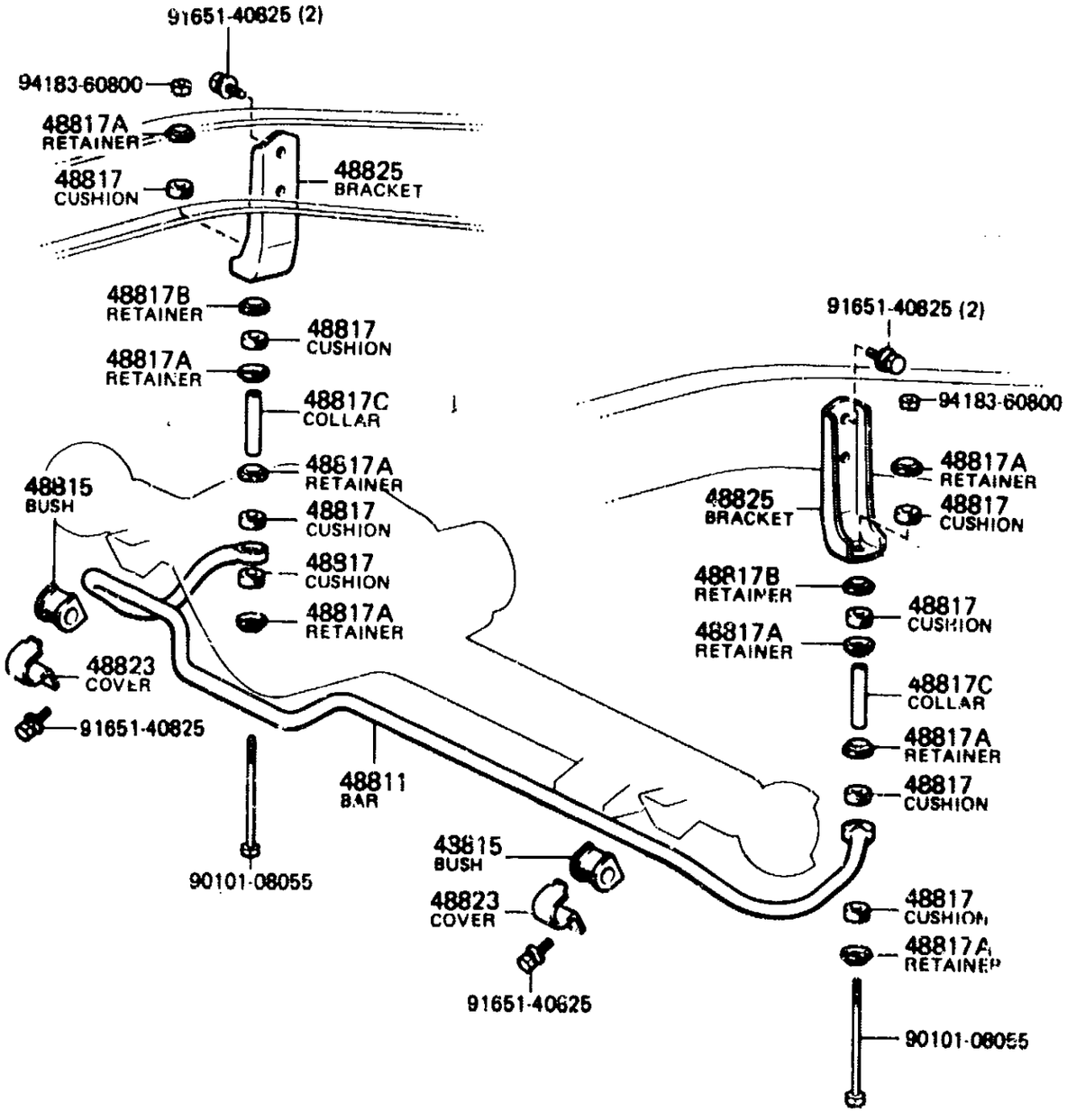

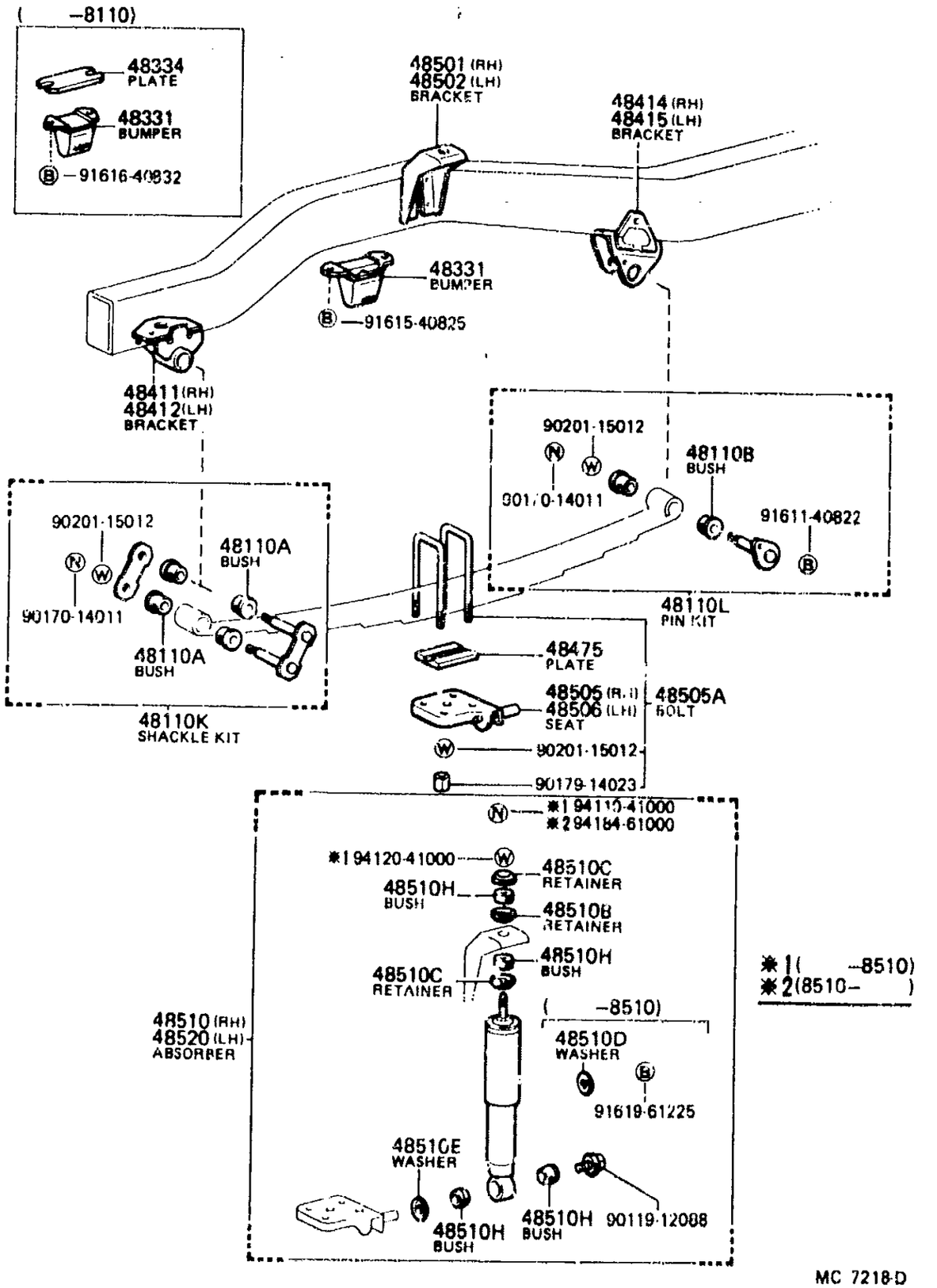

(8008-8411); (8411-8504)FJ60

ILLUST.NO. 30F3

(-8110) WGV

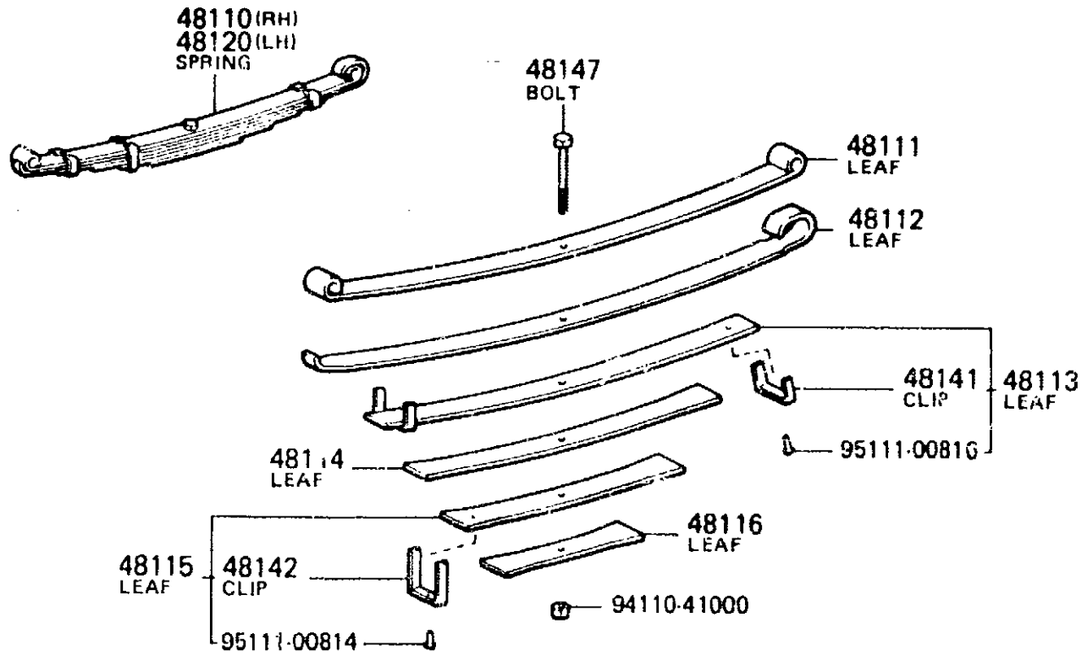

WGG

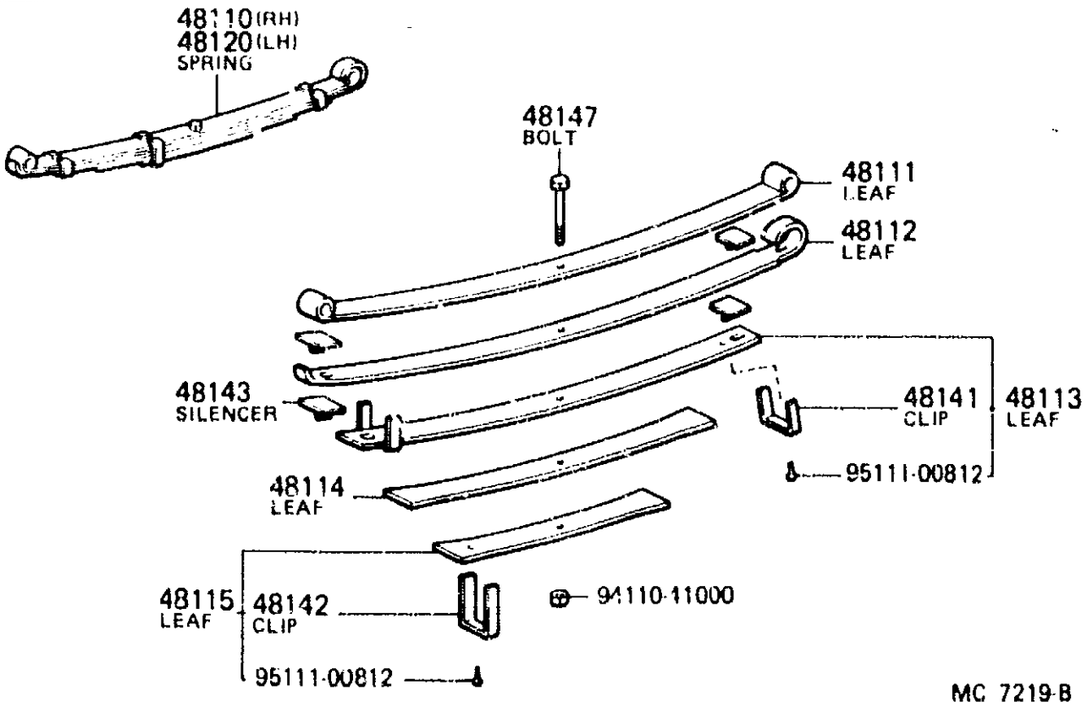

MC 7219-B

(8411-8510)BJ60; (8504-)FJ60; (8510-)HJ60

ILLUST.NO. 30F3

BJ60, FJ60

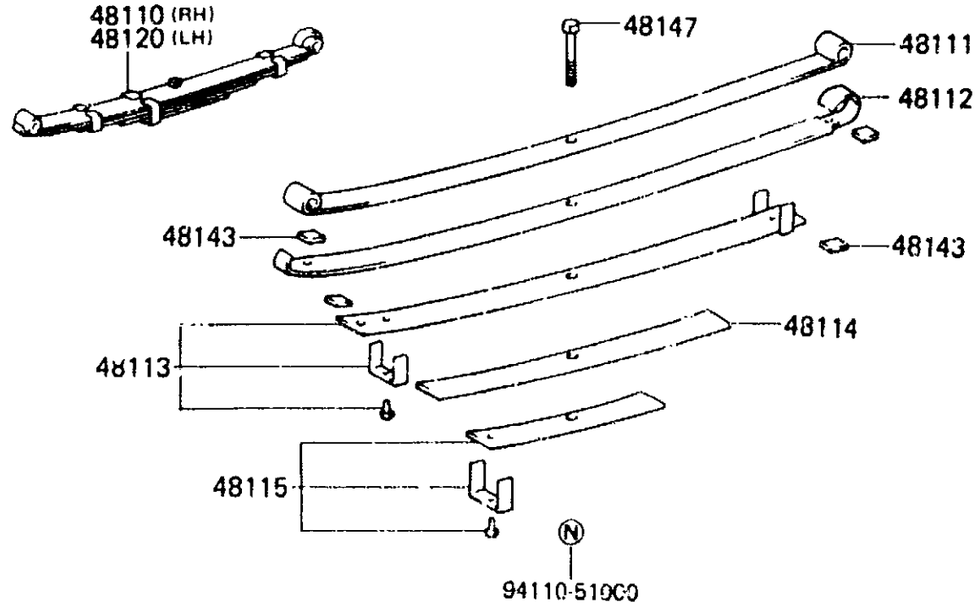

HJ60

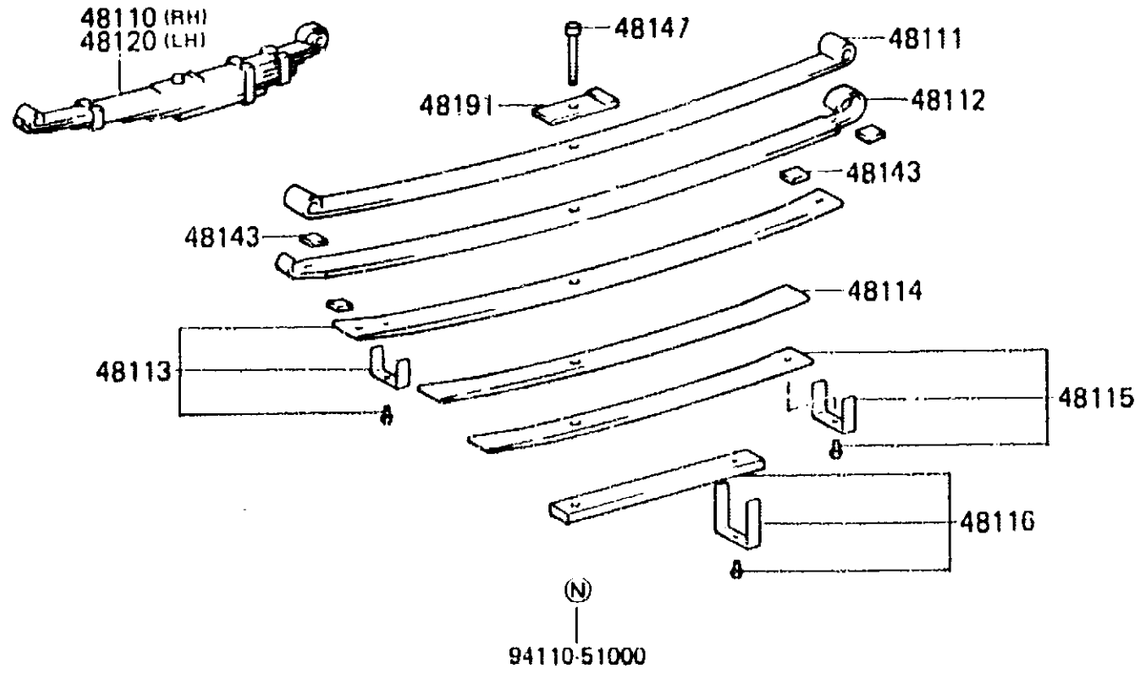

MC D722

GENUINE TOYOTA PARTS

	PROD.DATE	MODELS	DESCRIPTION	R/P	PART NUMBER	QTY	REV.REF.CODE FROM	REV.REF.CODE UP TO
	FIG. 48-03 FRONT SPRING & SHOCK ABSORBER							
		48110 SPRING ASSY, FRONT, RH						
	8411-8504	BJ60			48110-60171-	1	515	554
	8411-8504	BJ60	W/WINCH		48110-60221-	1	515	554
C	8504-8510	BJ60,FJ60	W/WINCH			1	555	566
	8504-	BJ60,FJ60			48110-60171-	1	555	
	8008-8411	BJ60,FJ60..WGG			48110-60170-	1	455	514
	8110-8411	BJ60,FJ60..WGG	W/WINCH		48110-60220-	1		514
	8008-8110	BJ60,FJ60..WGV			48110-60160-	1	455	458
	8411-8504	FJ60..WGG			48110-60170-	1	515	554
	8411-8504	FJ60..WGG	W/WINCH		48110-60220-	1	515	554
	8510-	HJ60			48110-60370-	1	567	
		48110A BUSH (FOR FRONT SPRING SHACKLE)						
	8008-	BJ60,HJ60,FJ60			90389-18002-	8	455	
		48110B BUSH (FOR FRONT SPRING PIN)						
	8008-	BJ60,HJ60,FJ60			90389-18002-	4	455	
		48110K SHACKLE KIT, FRONT SPRING						
	8008-	BJ60,HJ60,FJ60			04481-60020-	2	455	
		48110L PIN KIT, FRONT SPRING						
	8008-	BJ60,HJ60,FJ60			04482-60040-	2	455	
		48111 LEAF, FRONT SPRING, NO.1						
	8411-8504	BJ60			48111-60171-	2	515	554
	8411-8504	BJ60	W/WINCH		48111-60221-	2	515	554
C	8504-8510	BJ60,FJ60	W/WINCH			2	555	566
	8504-	BJ60,FJ60			48111-60171-	2	555	
	8008-8411	BJ60,FJ60..WGG			48111-60170-	2	455	514
	8110-8411	BJ60,FJ60..WGG	W/WINCH		48111-60220-	2		514
	8008-8110	BJ60,FJ60..WGV			48111-60160-	2	455	458
	8411-8504	FJ60..WGG			48111-60170-	2	515	554
	8411-8504	FJ60..WGG	W/WINCH		48111-60220-	2	515	554
	8510-	HJ60			48111-60370-	2	567	
		48111 LEAF, FRONT SPRING, NO.1 CONTINUED						
	8510-	HJ60			48111-60370-	2	567	
		48112 LEAF, FRONT SPRING, NO.2						
	8411-8504	BJ60			48112-60171-	2	515	554
	8411-8504	BJ60	W/WINCH		48112-60221-	2	515	554
C	8504-8510	BJ60,FJ60	W/WINCH			2	555	566
	8504-	BJ60,FJ60			48112-60171-	2	555	
	8008-8411	BJ60,FJ60..WGG			48112-60170-	2	455	514
	8110-8411	BJ60,FJ60..WGG	W/WINCH		48112-60220-	2		514
	8008-8110	BJ60,FJ60..WGV			48112-60160-	2	455	458
	8411-8504	FJ60..WGG			48112-60170-	2	515	554
	8411-8504	FJ60..WGG	W/WINCH		48112-60220-	2	515	554
	8510-	HJ60			48112-60370-	2	567	
		48113 LEAF, FRONT SPRING, NO.3						
	8411-8504	BJ60			48102-60171-	2	515	554
	8411-8504	BJ60	W/WINCH		48102-60221-	2	51	554
C	8504-8510	BJ60,FJ60	W/WINCH			2	555	566
	8504-	BJ60,FJ60			48102-60171-	2	555	
	8008-8411	BJ60,FJ60..WGG			48102-60170-	2	455	514
	8110-8411	BJ60,FJ60..WGG	W/WINCH		48102-60220-	2		514
	8008-8110	BJ60,FJ60..WGV			48102-60160-	2	455	458
	8411-8504	FJ60..WGG			48102-60170-	2	515	554
	8411-8504	FJ60..WGG	W/WINCH		48102-60220-	2	515	554
	8510-	HJ60			48102-60370-	2	567	
		48114 LEAF, FRONT SPRING, NO.4						
	8411-8504	BJ60			48114-60171-	2	515	554
	8411-8504	BJ60	W/WINCH		48114-60221-	2	515	554
C	8504-8510	BJ60,FJ60	W/WINCH			2	555	566
	8504-	BJ60,FJ60			48114-60171-	2	555	
	8008-8411	BJ60,FJ60..WGG			48114-60170-	2	455	514
	8110-8411	BJ60,FJ60..WGG	W/WINCH		48114-60220-	2		514

GENUINE TOYOTA PARTS

	PROD.DATE	MODELS	DESCRIPTION	R/P	PART NUMBER	QTY	REV.REF.CODE FROM	REV.REF.CODE UP TO
		48114 LEAF, FRONT SPRING, NO.4						
		CONTINUED						
	8008-8110	BJ60,FJ60..WGV			48114-60160-	2	455	458
	8411-8504	FJ60..WGG			48114-60170-	2	515	554
	8411-8504	FJ60..WGG	W/WINCH		48114-60220-	2	515	554
	8510-	HJ60			48114-60370-	2	567	
		48115 LEAF, FRONT SPRING, NO.5						
	8411-8504	BJ60			48103-60171-	2	515	554
	8411-8504	BJ60	W/WINCH		48103-60221-	2	515	554
C	8504-8510	BJ60,FJ60	W/WINCH			2	555	566
	8504-	BJ60,FJ60			48103-60171-	2	555	
	8008-8411	BJ60,FJ60..WGG			48103-60170-	2	455	514
	8110-8411	BJ60,FJ60..WGG	W/WINCH		48103-60220-	2		514
	8008-8110	BJ60,FJ60..WGV			48103-60160-	2	455	458
	8411-8504	FJ60..WGG			48103-60170-	2	515	554
	8411-8504	FJ60..WGG	W/WINCH		48103-60220-	2	515	554
	8510-	HJ60			48103-60370-	2	567	
		48116 LEAF, FRONT SPRING, NO.6						
	8008-8110	BJ60,FJ60..WGV			48116-60160-	2	455	458
	8510-	HJ60			48104-60320-	2	567	
		48120 SPRING ASSY, FRONT, LH						
	8411-8504	BJ60			48110-60171-	1	515	554
	8411-8504	BJ60	W/WINCH		48110-60221-	1	515	554
C	8504-8510	BJ60,FJ60	W/WINCH			1	555	566
	8504-	BJ60,FJ60			48110-60171-	1	555	
	8008-8411	BJ60,FJ60..WGG			48110-60170-	1	455	514
	8110-8411	BJ60,FJ60..WGG	W/WINCH		48110-60220-	1		514
	8008-8110	BJ60,FJ60..WGV			48110-60160-	1	455	458
	8411-8504	FJ60..WGG			48110-60170-	1	515	554
	8411-8504	FJ60..WGG	W/WINCH		48110-60220-	1	515	554
	8510-	HJ60			48110-60370-	1	567	

	PROD.DATE	MODELS	DESCRIPTION	R/P	PART NUMBER	QTY	REV.REF.CODE FROM	REV.REF.CODE UP TO
		48141 CLIP, FRONT SPRING, NO.1						
	8008-	BJ60,FJ60..WGG			48141-60081-	4	455	
	8008-8110	BJ60,FJ60..WGV			48141-35021-	4	455	458
		48142 CLIP, FRONT SPRING, NO.2						
C	8008-8411	BJ60,FJ60..WGG			48142-60081-	2	455	514
	8008-8110	BJ60,FJ60..WGV			48142-60121-	2	455	458
		48143 SILENCER, FRONT SPRING						
C	8008-	BJ60,HJ60,FJ60..WGG			48252-26070-	8	455	
		48147 BOLT, FRONT SPRING, CENTER						
	8008-	BJ60,FJ60..WGG			48147-60170-	2	455	
	8008-8110	BJ60,FJ60..WGV			48247-25160-	2	455	458
C	8510-	HJ60			48247-27340-	2	567	
		48191 WEDGE, CASTER (FOR FRONT LEAF SPRING)						
C	8510-	HJ60			48191-60030-	2	567	
		48331 BUMPER, FRONT SPRING, NO.1						
	8008-8110	BJ60,FJ60		#	48304-60030- (48304-60031-)	2	455	464
	8110-	BJ60,HJ60,FJ60			48304-60031-	2	465	
		48334 PLATE, BUMPER FRONT						
	8008-8110	BJ60,FJ60			48334-60010-	1	455	464
		48411 BRACKET, FRONT SPRING (FOR FRONT RH)						
	8008-	BJ60,HJ60,FJ60			48401-60020-	1	455	
		48412 BRACKET, FRONT SPRING (FOR FRONT LH)						
	8008-	BJ60,HJ60,FJ60			48401-60020-	1	455	
		48414 BRACKET, FRONT SPRING (FOR REAR RH)						
	8411-8504	BJ60			48412-60020-	1	515	554
	8008-8411	BJ60,FJ60			48413-60030-	1	455	514
	8504-	BJ60,FJ60			48412-60020-	1	555	

	PROD.DATE	MODELS	DESCRIPTION	R/P	PART NUMBER	QTY	REV.REF.CODE FROM	REV.REF.CODE UP TO
		48414 BRACKET, FRONT SPRING (FOR REAR RH) CONTINUED						
	8411-8504	FJ60			48413-60030-	1	515	554
	8510-	HJ60			48412-60021-	1	567	
		48415 BRACKET, FRONT SPRING (FOR REAR LH)						
	8411-8504	BJ60			48413-60031-	1	515	554
	8008-8411	BJ60,FJ60			48413-60030-	1	455	514
	8504-	BJ60,FJ60			48413-60031-	1	555	
	8411-8504	FJ60			48413-60030-	1	515	554
	8510-	HJ60			48413-60032-	1	567	
		48475 PLATE, DISTANCE (FOR FRONT)						
	8008-	BJ60,FJ60			48475-60020-	1	455	
		48501 BRACKET SUB-ASSY, FRONT SHOCK ABSORBER, UPPER RH						
C	8008-	BJ60,HJ60,FJ60			48512-60030-	1	455	
		48502 BRACKET SUB-ASSY, FRONT SHOCK ABSORBER, UPPER LH						
	8008-	BJ60,HJ60,FJ60			48512-60030-	1	455	
		48505 SEAT, FRONT SPRING, RH						
	8008-	BJ60,HJ60,FJ60			48048-60020-	1	455	
		48505A BOLT, U (FOR FRONT SPRING)						
C	8008-8608	BJ60,FJ60,,WGG	L=195,W/DISTANCE PLATE		90118-14187-	2	455	
C	8008-8608	BJ60,FJ60,,WGG	L=185		90118-14188-	4	455	
	8008-8110	BJ60,FJ60,,WGV	L=195		90118-14187-	4	455	458
	8008-8110	BJ60,FJ60,,WGV	L=205,W/DISTANCE PLATE		90118-14189-	2	455	458
C	8608-	FJ60	L=195,W/DISTANCE PLATE		90117-14016-	2		
C	8608-	FJ60	L=185		90117-14017-	4		
	8510-	HJ60			90118-14224-	2	567	

	PROD.DATE	MODELS	DESCRIPTION	R/P	PART NUMBER	QTY	REV.REF.CODE FROM	REV.REF.CODE UP TO
		48506 SEAT, FRONT SPRING, LH						
	8008-	BJ60,HJ60,FJ60			48049-60020-	1	455	
		48510 ABSORBER ASSY, SHOCK, FRONT RH						
	8008-8411	BJ60,FJ60,,WGG			# 48511-69065- (48511-69066-)	1	455	514
	8008-8110	BJ60,FJ60,,WGV			48511-69055-	1	455	458
	8411-	BJ60,HJ60,FJ60			48511-69066-	1	515	
		48510B RETAINER, CUSHION, NO.1 (FOR FRONT SHOCK ABSORBER)						
	8008-	BJ60,HJ60,FJ60			90948-02017-	2	455	
		48510C RETAINER, CUSHION, NO.2 (FOR FRONT SHOCK ABSORBER)						
	8008-	BJ60,HJ60,FJ60			90948-02002-	4	455	
		48510D WASHER, FRONT SHOCK ABSORBER CUSHION, NO.1						
C	8008-8510	BJ60,FJ60			90948-03015-	2	455	566
		48510E WASHER, FRONT SHOCK ABSORBER CUSHION, NO.2						
	8008-	BJ60,HJ60,FJ60			90948-03011-	2	455	
		48510H BUSH (FOR FRONT SHOCK ABSORBER)						
	8008-	BJ60,HJ60,FJ60	LWR		90385-19057-	4	455	
	8008-	BJ60,HJ60,FJ60	UPR		90948-01003-	4	455	
		48520 ABSORBER ASSY, SHOCK, FRONT LH						
	8008-8411	BJ60,FJ60,,WGG			# 48511-69065- (48511-69066-)	1	455	514
	8008-8110	BJ60,FJ60,,WGV			48511-69055-	1	455	458
	8411-	BJ60,HJ60,FJ60			48511-69066-	1	515	
		48811 BAR, STABILIZER, FRONT						
C	8008-8608	BJ60,HJ60,FJ60,,WGG			48811-60010-	1	455	600
C	8608-	HJ60,FJ60			48811-60011-	1	601	
		48815 BUSH, STABILIZER, FRONT						
	8008-	BJ60,HJ60,FJ60,,WGG			48815-20030-	2	455	

PROD.DATE	MODELS	DESCRIPTION	R/P	PART NUMBER	QTY	REV.REF.CODE FROM	REV.REF.CODE UP TO
	48817	CUSHION, FRONT STABILIZER					
8008-	BJ60,HJ60,FJ60..WGG			48817-30010-	8	455	
	48817A	RETAINER, CUSHION, NO.1 (FOR FRONT STABILIZER BAR)					
8008-	BJ60,HJ60,FJ60..WGG			90948-02032-	8	455	
	48817B	RETAINER, CUSHION, NO.2 (FOR FRONT STABILIZER BAR)					
8008-	BJ60,HJ60,FJ60..WGG			90948-02015-	2	455	
	48817C	COLLAR (FOR STABILIZER BAR)					
8008-	BJ60,HJ60,FJ60..WGG			96387-09006-	2	455	
	48823	COVER, STABILIZER LINK (FOR FRONT)					
8008-	BJ60,HJ60,FJ60..WGG			48823-27010-	2	455	
	48825	BRACKET, STABILIZER, NO.2					
8008-	BJ60 HJ60,FJ60..WGG			48825-60010-	2	455	

PROD.DATE	MODELS	DESCRIPTION	R/P	PART NUMBER	QTY	REV.REF.CODE FROM	REV.REF.CODE UP TO

FIG.48-04 REAR SPRING & SHOCK ABSORBER

2-M14

(8008-8510)BJ60; (8411-)FJ60

ILLUST.NO. 10F2

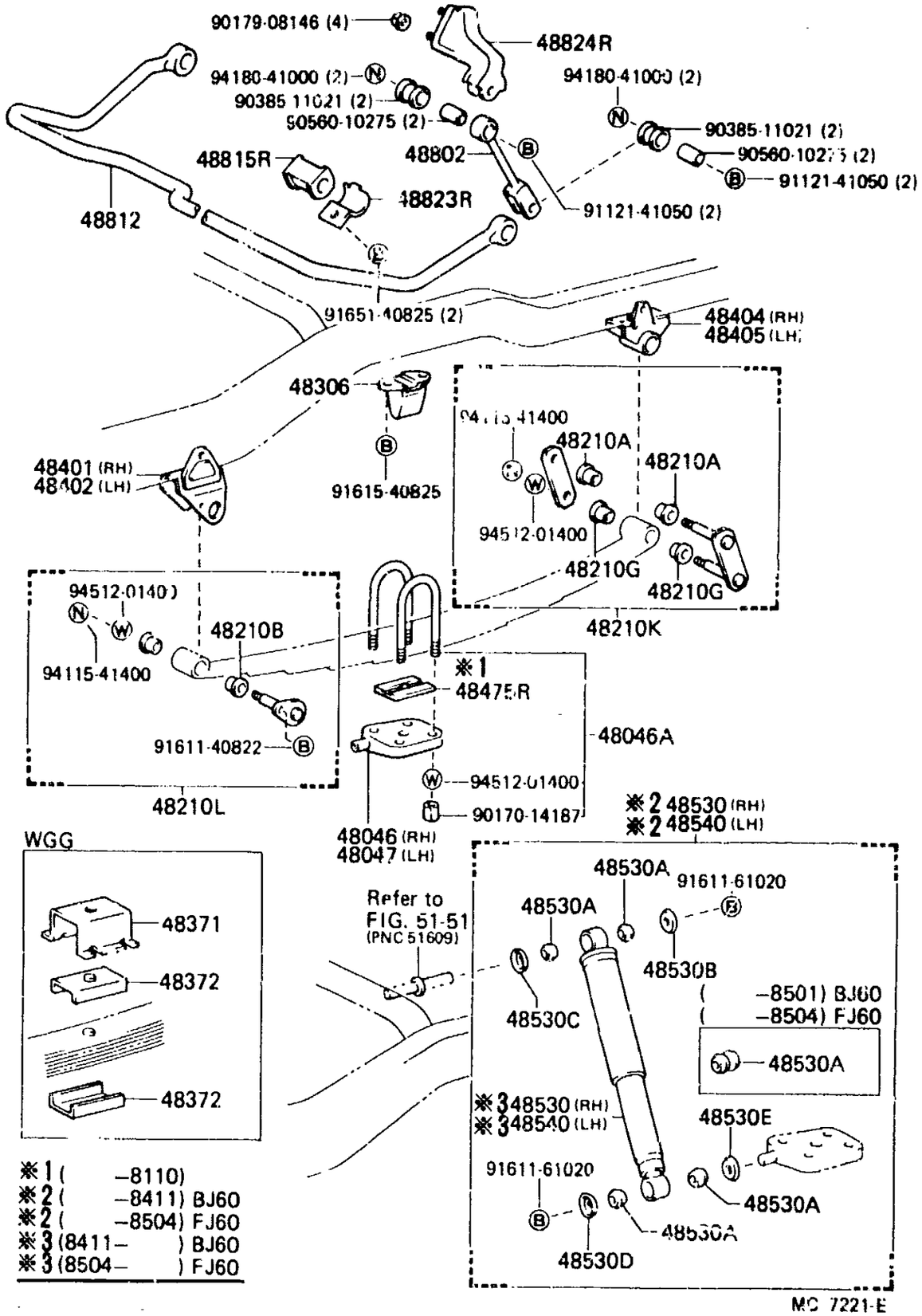

※1 (-8110)
※2 (-8411) BJ60
※2 (-8504) FJ60
※3 (8411-) BJ60
※3 (8504-) FJ60

MC 7221-E

ILLUST.NO. 10F2

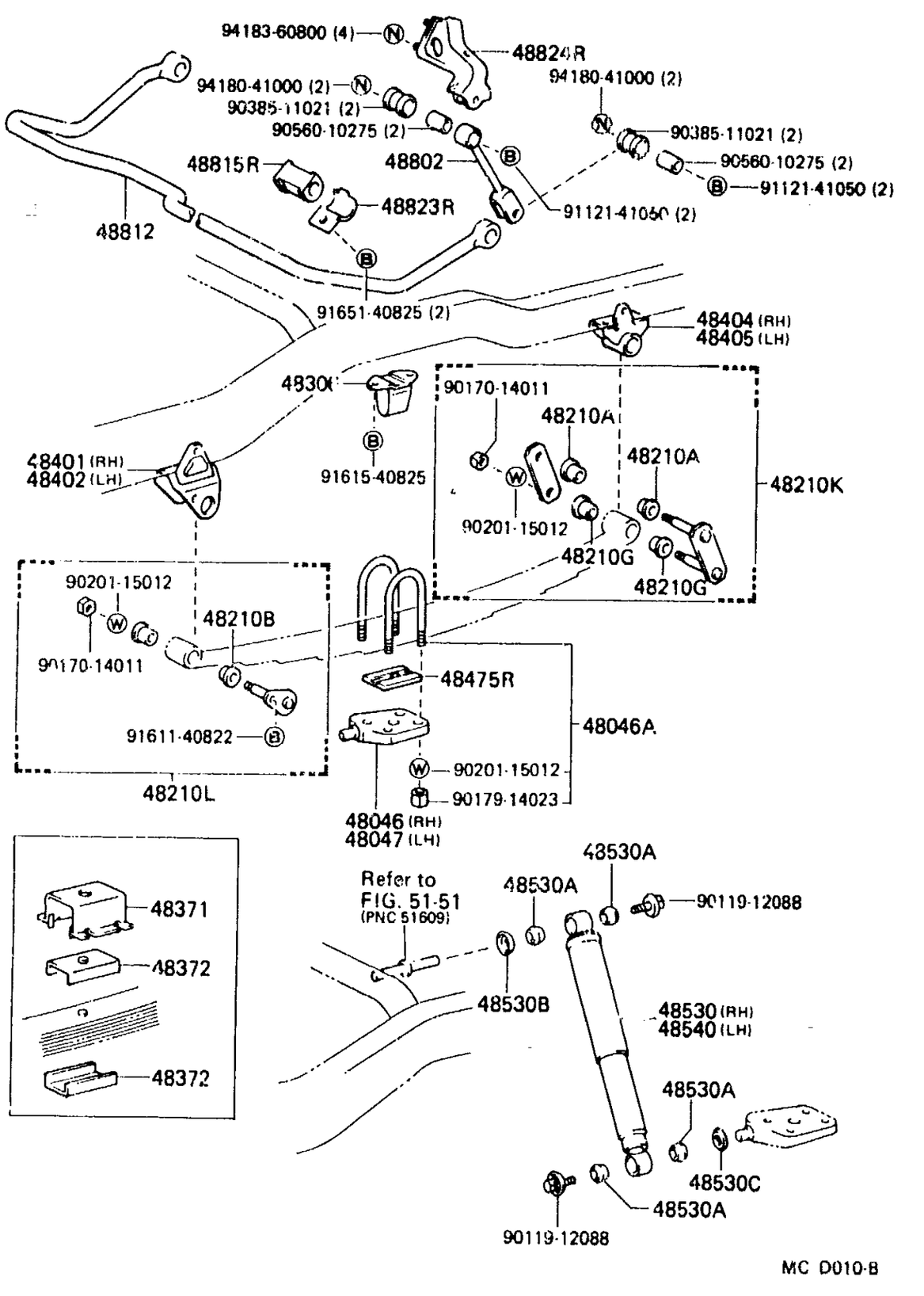

MC D010-B

MC7221E

MCD010A

(8008-)

ILLUST.NO. 2OF2

WGV

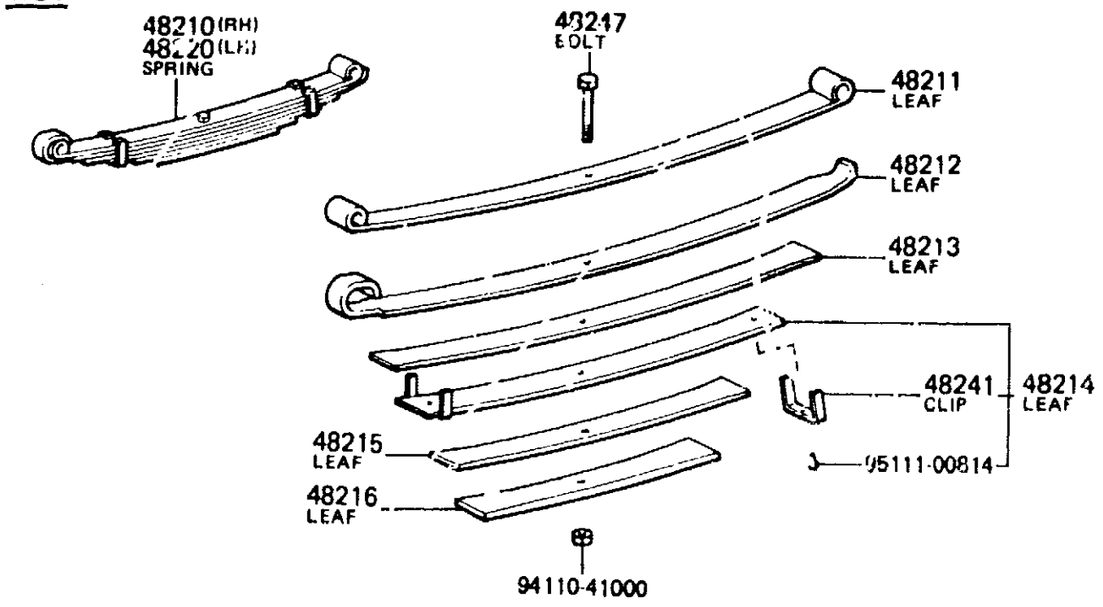

WGG

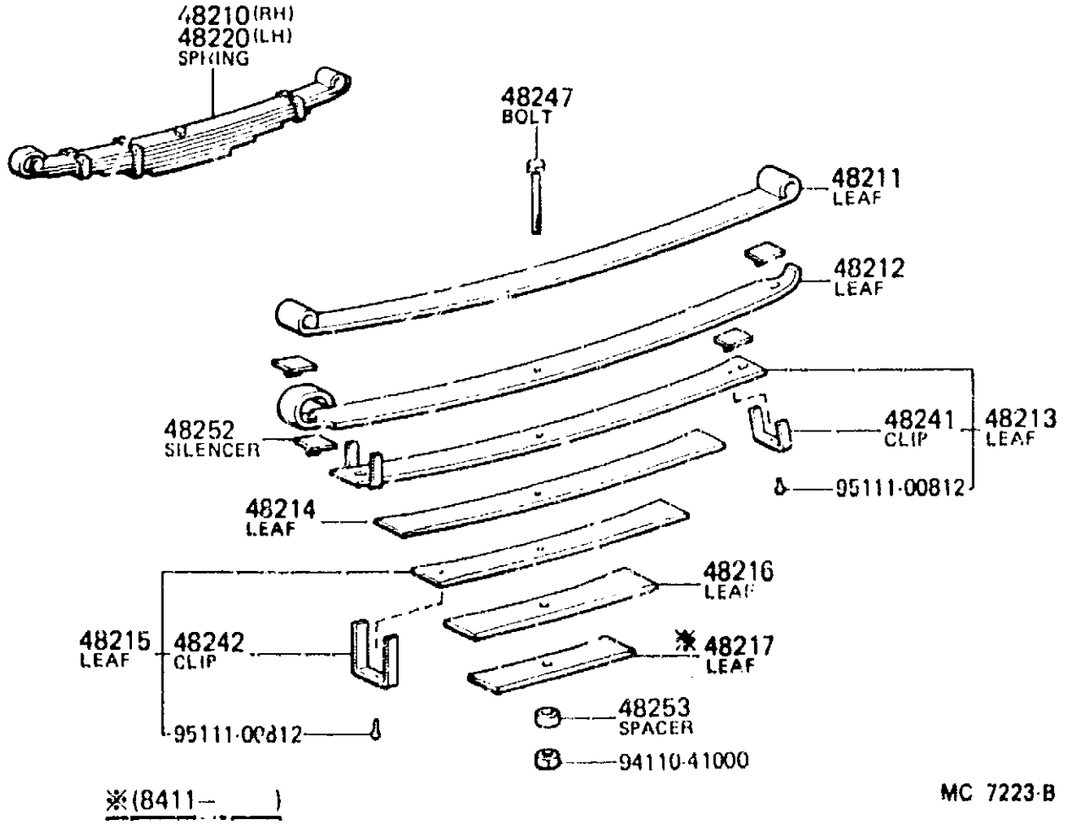

※(8411-)

MC 7223-B

GENUINE TOYOTA PARTS

	PROD.DATE	MODELS	DESCRIPTION	R/P	PART NUMBER	QTY	REV.REF.CODE FROM	REV.REF.CODE UP TO
	FIG.	48-04 REAR SPRING & SHOCK ABSORBER						
		48046 SEAT SUB-ASSY, SPRING U BOLT, RH						
	8008-	BJ60,FJ60..WGG			48046-60050-	1	455	
	8008-8110	BJ60,FJ60..WGV			48046-60040-	1	455	458
	8510-	HJ60			48046-60051-	1	567	
		48046A BOLT, U (FOR REAR SPRING)						
	8008-8411	BJ60,FJ60..WGG	L=195		90118-14109-	2	455	514
	8008-8411	BJ60,FJ60..WGG	L=190		90118-14190-	4	455	514
	8008-8110	BJ60,FJ60..WGV	L=180		90118-14160-	4	455	458
	8008-8110	BJ60,FJ60..WGV	L=190,W/DISTANCE PLATE		90118-14190-	2	455	458
C	8411-8605	BJ60,HJ60	L=205		90118-14110-	2	515	
C	8605-	HJ60	L=205		90117-14180-	2		
	8411-	BJ60,HJ60	L=200		90118-14210-	2	515	
C	8411-8605	FJ60	L=195		90118-14109-	2	515	
	8411-	FJ60	L=190		90118-14190-	4	515	
C	8605-	FJ60	L=195		90117-14179-	2		
		48047 SEAT SUB-ASSY, SPRING U BOLT, LH						
	8008-	BJ60,FJ60..WGG			48047-60050-	1	455	
	8008-8110	BJ60,FJ60..WGV			48047-60040-	1	455	458
	8510-	HJ60			48047-60051-	1	567	
		48210 SPRING ASSY, REAR RH						
	8008-8411	BJ60,FJ60..WGG			48210-60280-	1	455	514
	8008-8110	BJ60,FJ60..WGV			48210-60270-	1	455	458
	8411-	BJ60,HJ60			48210-60410-	1	515	
	8411-	FJ60			48210-60280-	1	515	
		48210A BUSH (FOR REAR SPRING SHACKLE UPPER)						
	8008-	BJ60,HJ60,FJ60			90389-18002-	4	455	
		48213 BUSH (FOR REAR SPRING PIN)						
	8008-	BJ60,HJ60,FJ60			90389-18002-	4	455	

PROD.DATE	MODELS	DESCRIPTION	R/P	PART NUMBER	QTY	REV.REF.CODE FROM	REV.REF.CODE UP TO
	48210G BUSH (FOR REAR SPRING SHACKLE LOWER)						
8008-	BJ60,HJ60,FJ60			90389-18002-	4	455	
	48210K SHACKLE KIT, REAR SPRING						
8008-	BJ60,HJ60,FJ60			04483-60050-	2	455	
	48210L PIN KIT, REAR SPRING						
8008-	BJ60,HJ60,FJ60			04482-60040-	2	455	
	48211 LEAF, REAR SPRING, NO.1						
8008-8411	BJ60,FJ60..WGG	LH		48211-60250-	1	455	514
8008-8411	BJ60,FJ60..WGG	RH		48211-60280-	1	455	514
8008-8110	BJ60,FJ60..WGV	LH		48211-60240-	1	455	458
8008-8110	BJ60,FJ60..WGV	RH		48211-60270-	1	455	458
8411-	BJ60,HJ60	RH		48211-60400-	1	515	
8411-	BJ60,HJ60	LH		48211-60410-	1	515	
8411-	FJ60	LH		48211-60250-	1	515	
8411-	FJ60	RH		48211-60280-	1	515	
	48212 LEAF, REAR SPRING, NO.2						
8008-8411	BJ60,FJ60..WGG	LH		48212-60250-	1	455	514
8008-8411	BJ60,FJ60..WGG	RH		48212-60280-	1	455	514
8008-8110	BJ60,FJ60..WGV	LH		48212-60240-	1	455	458
8008-8110	BJ60,FJ60..WGV	RH		48212-60270-	1	455	458
8411-	BJ60,HJ60	RH		48212-60400-	1	515	
8411-	BJ60,HJ60	LH		48212-60410-	1	515	
8411-	FJ60	LH		48212-60250-	1	515	
8411-	FJ60	RH		48212-60280-	1	515	
	48213 LEAF, REAR SPRING, NO.3						
8008-8411	BJ60,FJ60..WGG	LH		48202-60250-	1	455	514
8008-8411	BJ60,FJ60..WGG	RH		48202-60280-	1	455	514
8008-8110	BJ60,FJ60..WGV	LH		48213-60240-	1	455	458
8008-8110	BJ60,FJ60..WGV	RH		48213-60270-	1	455	458
8411-	BJ60,HJ60	RH		48202-60400-	1	515	

PROD.DATE	MODELS	DESCRIPTION	R/P	PART NUMBER	QTY	REV.REF.CODE FROM	REV.REF.CODE UP TO
	48213 LEAF, REAR SPRING, NO.3 CONTINUED						
8411-	BJ60,HJ60	LH		48202-60410-	1	515	
8411-	FJ60	LH		48202-60250-	1	515	
8411-	FJ60	RH		48202-60280-	1	515	
	48214 LEAF, REAR SPRING, NO.4						
8008-8411	BJ60,FJ60..WGG	LH		48214-60250-	1	455	514
8008-8411	BJ60,FJ60..WGG	RH		48214-60280-	1	455	514
8008-8110	BJ60,FJ60..WGV	LH		48202-60240-	1	455	458
8008-8110	BJ60,FJ60..WGV	RH		48202-60270-	1	455	458
8411-	BJ60,HJ60	RH		48214-60400-	1	515	
8411-	BJ60,HJ60	LH		48214-60410-	1	515	
8411-	FJ60	LH		48214-60250-	1	515	
8411-	FJ60	RH		48214-60280-	1	515	
	48215 LEAF, REAR SPRING, NO.5						
8008-8411	BJ60,FJ60..WGG	LH		48203-60250-	1	455	514
8008-8411	BJ60,FJ60..WGG	RH		48203-60280-	1	455	514
8008-8110	BJ60,FJ60..WGV	LH		48215-60240-	1	455	458
8008-8110	BJ60,FJ60..WGV	RH		48215-60270-	1	455	458
8411-	BJ60,HJ60	RH		48203-60400-	1	515	
8411-	BJ60,HJ60	LH		48203-60410-	1	515	
8411-	FJ60	LH		48203-60250-	1	515	
8411-	FJ60	RH		48203-60280-	1	515	
	48216 LEAF, REAR SPRING, NO.6						
8008-8411	BJ60,FJ60..HGG	LH		48216-60250-	1	455	514
8008-8411	BJ60,FJ60..WGG	RH		48216-60280-	1	455	514
8008-8110	BJ60,FJ60..WGV	LH		48216-60240-	1	455	458
8008-8110	BJ60,FJ60..WGV	RH		48216-60270-	1	455	458
8411-	BJ60,HJ60	RH		48216-60400-	1	515	
8411-	BJ60,HJ60	LH		48216-60410-	1	515	
8411-	FJ60	LH		48216-60250-	1	515	
8411-	FJ60	RH		48216-60280-	1	515	

GENUINE TOYOTA PARTS

PROD.DATE	MODELS	DESCRIPTION	R/P	PART NUMBER	QTY	REV.REF.CODE FROM	REV.REF.CODE UP TO
	48217 LEAF, REAR SPRING, NO.7						
8411-	BJ60,HJ60	RH		48217-60400-	1	515	
8411-	BJ60,HJ60	LH		48217-60410-	1	515	
	48220 SPRING ASSY, REAR LH						
8008-8411	BJ60,FJ60..WGG			48210-60250-	1	455	514
8008-8110	BJ60,FJ60..WGV			48210-60240-	1	455	458
8411-	BJ60,HJ60			48210-60400-	1	515	
8411-	FJ60			48210-60250-	1	515	
	48241 CLIP, REAR SPRING, NO.1						
8008-8205	BJ60,FJ60..WGG			48141-60081-	4	455	
8205-8411	BJ60,FJ60..WGG	LH		48141-35021-	4		514
8205-8411	BJ60,FJ60..WGG	RH		48141-60081-	2		514
8008-8110	BJ60,FJ60..WGV			48142-60081-	4	455	458
8411-	BJ60,HJ60	RH & LH		48241-60250-	4	515	
8411-	FJ60	LH		48141-35021-	4	515	
8411-	FJ60	RH		48141-60081-	2	515	
	48242 CLIP, REAR SPRING, NO.2						
8008-8205	BJ60,FJ60..WGG			48142-60081-	4	455	
8205-8411	BJ60,FJ60..WGG	RH			2		514
8205-8411	BJ60,FJ60..WGG	LH		48142-60280-	4		514
8411-	BJ60,HJ60	RH & LH		48142-60121-	2	515	
8411-	FJ60	RH		48142-60081-	2	515	
8411-	FJ60	LH		48142-60280-	4	515	
	48247 BOLT, REAR SPRING, CENTER						
8008-8411	BJ60,FJ60..WGG			48247-60250-	2	455	514
8008-8110	BJ60,FJ60..WGV			48247-29210-	2	455	458
8411-	BJ60,HJ60	RH & LH		48247-60380-	2	515	
8411-	FJ60			48247-60250-	2	515	
	48252 SILENCER, REAR SPRING						
8008-	BJ60,HJ60,FJ60..WGG			48252-26070-	8	455	

PROD.DATE	MODELS	DESCRIPTION	R/P	PART NUMBER	QTY	REV.REF.CODE FROM	REV.REF.CODE UP TO
	48253 SPACER, REAR SPRING LEAF						
8008-	BJ60,HJ60,FJ60..WGG			48253-15010-	2	455	
	48306 BUMPER SUB-ASSY, REAR SPRING						
8008-	BJ60,HJ60,FJ60			48306-60030-	2	455	
	48371 RETAINER, SPRING PAD						
8008-8411	BJ60,FJ60..WGG			48371-60010-	2	455	514
8008-8411	BJ60,FJ60..WGG	W/DISTANCE PLATE		48371-60020-	1	455	514
8411-	BJ60,HJ60			48371-60030-	1	515	
8411-	BJ60,HJ60	W/DISTANCE PLATE		48371-60040-	1	515	
8411-	FJ60			48371-60010-	2	515	
8411-	FJ60	W/DISTANCE PLATE		48371-60020-	1	515	
	48372 PAD, SPRING						
8008-	BJ60,HJ60,FJ60..WGG			48372-23030-	4	455	
	48401 BRACKET SUB-ASSY, REAR SPRING FRONT, RH						
8411-8504	BJ60			48414-60041-	1	515	554
8008-8411	BJ60,FJ60			48414-60040-	1	455	514
8504-	BJ60,FJ60			48414-60041-	1	555	
8411-8504	FJ60			48414-60040-	1	515	554
8510-	HJ60			48414-60042-	1	567	
	48402 BRACKET SUB-ASSY, REAR SPRING FRONT, LH						
8411-8504	BJ60			48415-60041-	1	515	554
8008-8411	BJ60,FJ60			48415-60040-	1	455	514
8504-	BJ60,FJ60			48415-60041-	1	555	
8411-8504	FJ60			48415-60040-	1	515	554
8510-	HJ60			48415-60042-	1	567	
	48404 BRACKET SUB-ASSY, REAR SPRING REAR, RH						
8008-	BJ60,HJ60,FJ60			48416-60030-	1	455	

PROD.DATE	MODELS	DESCRIPTION	R/P	PART NUMBER	QTY	REV.REF.CODE FROM	REV.REF.CODE UP TO
	48405 BRACKET SUB-ASSY, REAR SPRING REAR, LH						
8008-	BJ60,HJ60,FJ60			48416-60030-	1	455	
	48475R PLATE, DISTANCE (FOR REAR)						
8008-8110	BJ60,FJ60..WGV			48475-60020-	1	455	458
	48530 ABSORBER ASSY, SHOCK REAR, RH						
8411-8510	BJ60			48531-60081-	1	515	566
8008-8411	BJ60,FJ60			48531-69065-	1	455	514
8411-8504	FJ60				1	515	554
8504-	FJ60			48531-60081-	1	555	
8510-	HJ60			48531-60160-	1	567	
	48530A BUSH (FOR REAR SHOCK ABSORBER)						
8501-8504	BJ60			90385-16007-	8		554
8008-8501	BJ60,FJ60			90385-16004-	4	455	
8504-	BJ60,FJ60			90385-16007-	8	555	
8501-8504	FJ60			90385-16004-	4		554
8510-	HJ60			90385-19057-	8	567	
	48530B WASHER, REAR SHOCK ABSORBER CUSHION, NO.1						
8008-	BJ60,FJ60			90948-03007-	2	455	
8510-	HJ60			90948-03011-	2	567	
	48530C WASHER, REAR SHOCK ABSORBER CUSHION, NO.2						
8008-	BJ60,FJ60			90948-03004-	2	455	
8510-	HJ60			90948-03011-	2	567	
	48530D WASHER, REAR SHOCK ABSORBER CUSHION, NO.3						
8008-	BJ60,FJ60			90948-03007-	2	455	
	48530E WASHER, REAR SHOCK ABSORBER CUSHION, NO.4						
8008-	BJ60,FJ60			90948-03004-	2	455	
	48540 ABSORBER ASSY, SHOCK REAR, LH						
8411-8510	BJ60			48531-60081-	1	515	566

GENUINE TOYOTA PARTS

PROD.DATE	MODELS	DESCRIPTION	R/P	PART NUMBER	QTY	REV.REF.CODE FROM	REV.REF.CODE UP TO
	48540 ABSORBER ASSY, SHOCK REAR, LH CONTINUED						
8008-8411	BJ60,FJ60			48531-69065-	1	455	514
8411-8504	FJ60				1	515	554
8504-	FJ60			48531-60081-	1	555	
8510-	HJ60			48541-60020-	1	567	
	48802 LINK SUB-ASSY, STABILIZER						
8411-	BJ60,HJ60	RH & LH		48802-60020-	2	515	
	48812 BAR, STABILIZER, REAR						
8411-	BJ60,HJ60			48812-60020-	1	515	
	48815R BUSH, STABILIZER (FOR REAR)						
8411-	BJ60,HJ60	RH & LH		48815-20060-	2	515	
	48823R COVER, STABILIZER LINK (FOR REAR)						
8411-	BJ60,HJ60	RH & LH		48823-27010-	2	515	
	48824R BRACKET, STABILIZER (FOR REAR)						
8411-8510	BJ60	RH & LH		48825-60030-	2	515	566
8510-	HJ60	RH & LH		48825-60031-	2	567	

(8008-8411); (8411-8504)FJ60

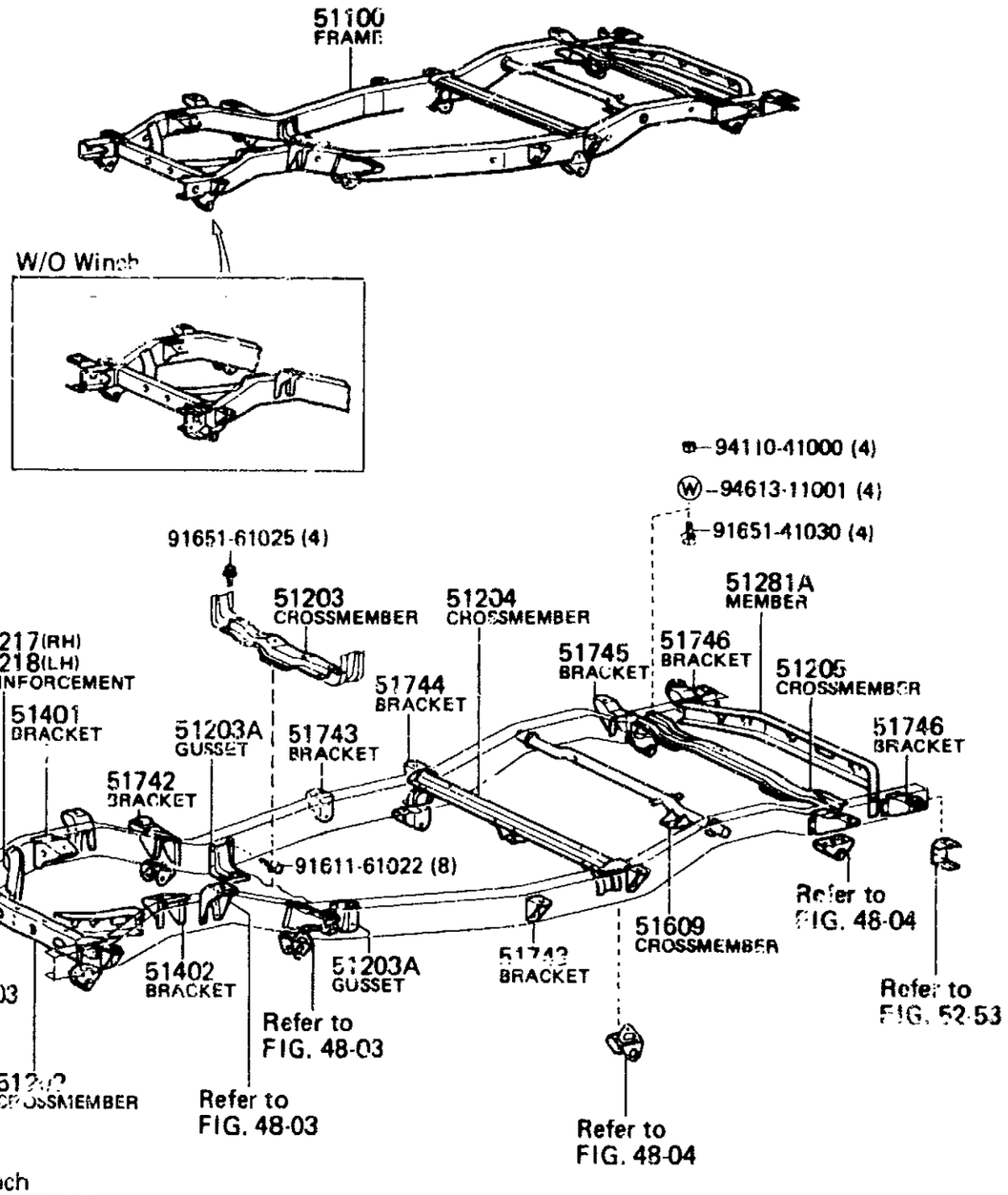

MB B631-F

(8411-)BJ60; (8504-)FJ60

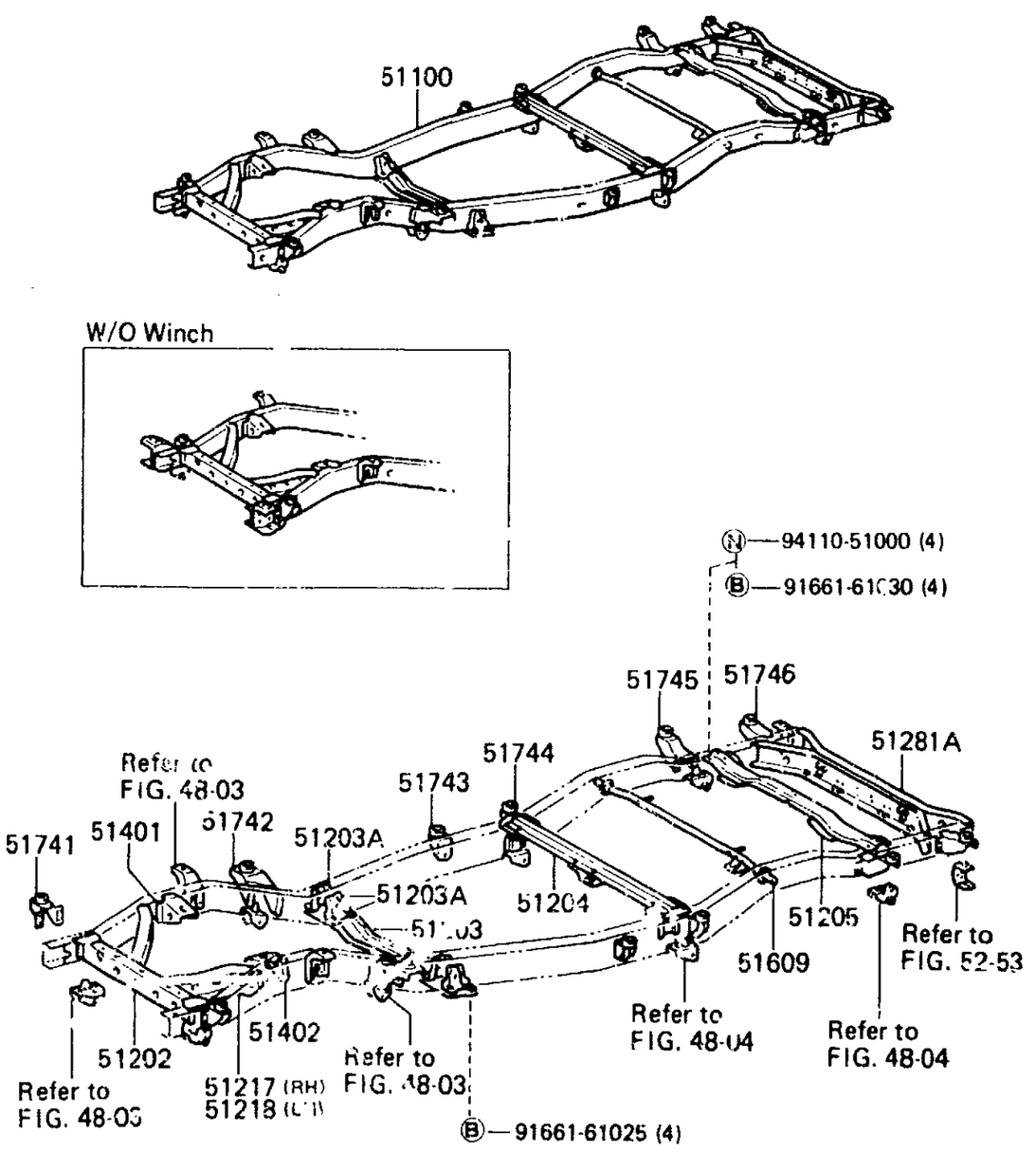

MB H705-A

GENUINE TOYOTA PARTS

	PROD.DATE	MODELS	DESCRIPTION	R/P	PART NUMBER	QTY	REV.REF.CODE FROM	REV.REF.CODE UP TO
	FIG. 51-51 FRAME							
	51100 FRAME ASSY							
	8008-8307	BJ60	W/O WINCH	#	51001-60620- (51001-60621-)	1	455	
	8008-8307	BJ60	W/WINCH	#	51001-60680- (51001-60681-)	1	455	
	8307-8411	BJ60	W/O WINCH		51001-60621-	1		514
	8307-8411	BJ60	W/WINCH		51001-60681-	1		514
	8411-8510	BJ60	W/O WINCH		51001-60622-	1	515	566
	8411-8510	BJ60	W/WINCH		51001-60682-	1	515	566
	8008-8307	FJ60	W/O WINCH	#	51001-60580- (51001-60581-)	1	455	
	8008-8307	FJ60	W/WINCH	#	51001-60640- (51001-60641-)	1	455	
	8307-8504	FJ60	W/O WINCH		51001-60581-	1		554
	8307-8504	FJ60	W/WINCH		51001-60641-	1		554
C	8504-8510	FJ60	W/WINCH		51002-60510-	1	555	566
	8504-	FJ60	W/O WINCH		51002-60500-	1	555	
	8510-	HJ60..ATM			51002-60471-	1	567	
	8510-	HJ60..MTM			51001-60603-	1	567	
		51202 CROSSMEMBER SUB-ASSY, FRAME, NO.1						
	8008-	BJ60,HJ60,FJ60			51201-60080-	1	455	
		51203 CROSSMEMBER SUB-ASSY, FRAME, NO.2						
	8411-8504	BJ60			51202-60072-	1	515	554
	8008-8210	BJ60,FJ60		#	51202-60070- (51202-60071-)	1	455	466
	8210-8411	BJ60,FJ60			51202-60071-	1	467	514
	8504-	BJ60,HJ60,FJ60..MTM			51202-60072-	1	555	
	8411-8504	FJ60			51202-60071-	1	515	554
	8510-	HJ60..ATM			51202-60150-	1	567	
		51203A GUSSET SUB-ASSY, CROSSMEMBER, NO.2						
	8008-8411	BJ60	RH		51041-60020-	1	455	514
	8008-8411	BJ60	LH		51042-60020-	1	455	514

	PROD.DATE	MODELS	DESCRIPTION	R/P	PART NUMBER	QTY	REV.REF.CODE FROM	REV.REF.CODE UP TO
		51203A GUSSET SUB-ASSY, CROSSMEMBER, NO.2 CONTINUED						
	8411-8504	BJ60	OUTER		51321-60011-	2	515	554
	8411-8504	BJ60	INNER		51322-60011-	2	515	554
	8504-	BJ60,HJ60,FJ60..MTM	OUTOR		51321-60011-	2	555	
	8504-	BJ60,HJ60,FJ60..MTM	INNER		51322-60011-	2	555	
	8008-8504	FJ60	RH		51041-60010-	1	455	554
	8008-8504	FJ60	LH		51042-60010-	1	455	554
	8510-	HJ60..ATM	INNER		51321-60030-	2	567	
	8510-	HJ60..ATM	OUTER		51322-60030-	2	567	
		51204 CROSSMEMBER SUB-ASSY, FRAME, NO.3						
	8411-8504	BJ60			51203-60101-	1	515	554
	8008-8411	BJ60,FJ60		#	51203-60100- (51203-60101-)	1	455	514
C	8504-8604	BJ60,FJ60			51203-60101-	1	555	572
	8411-8504	FJ60		#	51203-60100- (51203-60101-)	1	515	554
C	8604-	FJ60			51203-60102-	1	573	
	8510-	HJ60				1	567	
		51205 CROSSMEMBER SUB-ASSY, FRAME, NO.4						
	8008-	BJ60,HJ60,FJ60			51205-60010-	1	455	
		51217 REINFORCEMENT, FRONT CROSSMEMBER, LOWER RH						
	8008-8409	BJ60,FJ60			51217-60010-	1	455	
	8409-	BJ60,HJ60,FJ60			51217-60011-	1		
		51218 REINFORCEMENT, FRONT CROSSMEMBER, LOWER LH						
	8008-8409	BJ60,FJ60			51218-60010-	1	455	
	8409-	BJ60,HJ60,FJ60			51218-60011-	1		
		51281A MEMBER, REAR DIAGONAL						
	8008-8411	BJ60,FJ60			51281-60060-	1	455	514
	8411-	BJ60,HJ60			51209-60090-	1	515	
	8411-	FJ60			51281-60060-	1	515	

	PROD.DATE	MODELS	DESCRIPTION	R/P	PART NUMBER	QTY	REV.REF.CODE FROM	REV.REF.CODE UP TO
		51401 BRACKET SUB-ASSY, ENGINE FRONT MOUNTING, RH						
	8008-8411	BJ60			51421-60060-	1	455	514
	8411-8510	BJ60			51421-60061-	1	515	566
	8008-	FJ60			51421-60040-	1	455	
C	8510-	HJ60			51401-60021-	1	567	
		51402 BRACKET SUB-ASSY, ENGINE FRONT MOUNTING, LH						
	8008-8411	BJ60			51422-60060-	1	455	514
	8411-8510	BJ60			51422-60061-	1	515	566
	8008-	FJ60			51422-60040-	1	455	
C	8510-	HJ60			51422-60052-	1	567	
		51609 CROSSMEMBER SUB-ASSY, REAR SHOCK ABSORBER SUPPORT						
	8008-8307	BJ60,FJ60			51204-60050-	1	455	
	8307-	BJ60,FJ60			51204-60051-	1		
	8510-	HJ60			51204-60052-	1	567	
		51741 BRACKET, REAR BODY MOUNTING, NO.1						
	8411-8504	BJ60		RH	51701-60051-	1	515	554
	8411-8504	BJ60		LH	51702-60020-	1	515	554
	8008-8411	BJ60,FJ60			51701-60050-	2	455	514
	8504-	BJ60,HJ60,FJ60		RH	51701-60051-	1	555	
	8504-	BJ60,HJ60,FJ60		LH	51702-60020-	1	555	
	8411-8504	FJ60			51701-60050-	2	515	554
		51742 BRACKET, BODY MOUNTING, NO.2						
	8008-	BJ60,HJ60,FJ60		RH	51703-60020-	1	455	
	8008-	BJ60,HJ60,FJ60		LH	51704-60010-	1	455	
		51743 BRACKET, BODY MOUNTING, NO.3						
	8411-8504	BJ60			51705-60061-	2	515	554
	8008-8411	BJ60,FJ60			51705-60060-	2	455	514
	8504-8505	BJ60,FJ60			51705-60061-	2	555	
	8505-	BJ60,HJ60,FJ60			51705-60062-	2		
	8411-8504	FJ60			51705-60060-	2	515	554

GENUINE TOYOTA PARTS

PROD.DATE	MODELS	DESCRIPTION	R/P	PART NUMBER	QTY	REV.REF.CODE FROM	REV.REF.CODE UP TO
	51744 BRACKET, BODY MOUNTING, NO.4						
8411-8504	BJ60			51705-60110-	2	515	554
8008-8411	BJ60,FJ60			51705-60060-	2	455	514
8504-	BJ60,HJ60,FJ60			51705-60110-	2	555	
8411-8504	FJ60			51705-60060-	2	515	554
	51745 BRACKET, BODY MOUNTING, NO.5						
8411-8504	BJ60			51707-60030-	2	515	554
8008-8411	BJ60,FJ60			51737-60020-	2	455	514
8504-	BJ60,HJ60,FJ60			51707-60030-	2	555	
8411-8504	FJ60			51737-60020-	2	515	554
	51746 BRACKET, BODY MOUNTING, NO.6						
8008-	BJ60,HJ60,FJ60			51709-60020-	2	455	

FIG.51-52 SUSPENSION CROSSMEMBER & UNDER COVER

3-D1

(8008-8510); (8510-8604)FJ60

(8510-8604)HJ60; (8604-)

FJ60..WGG

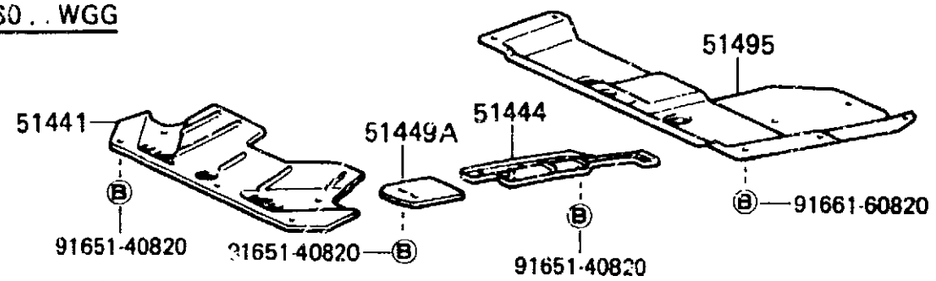

FJ60..WGV (8008-8110)

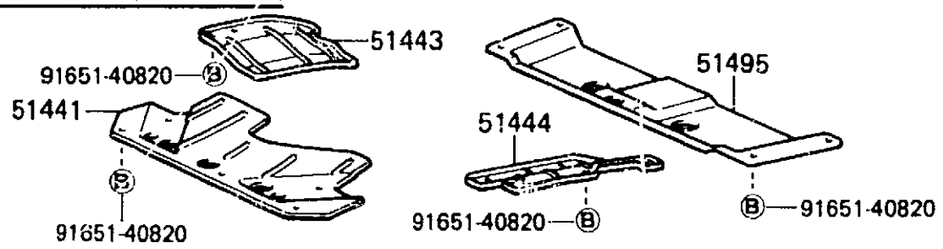

BJ60

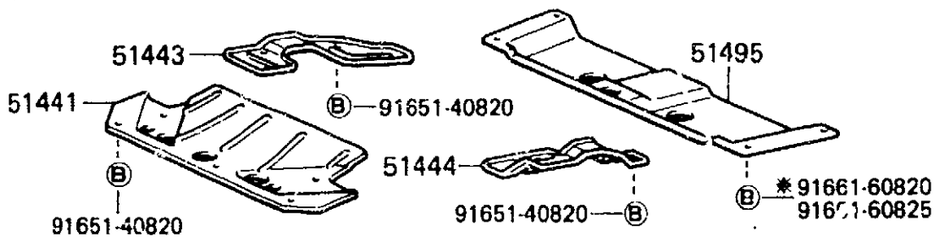

HJ60

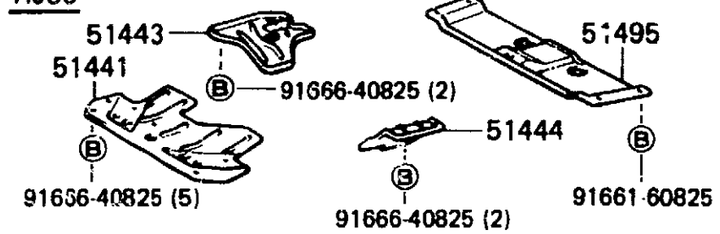

ATM

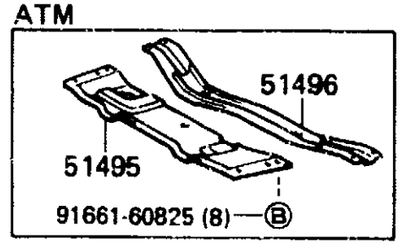

FR

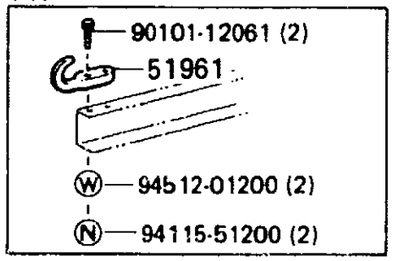

RR

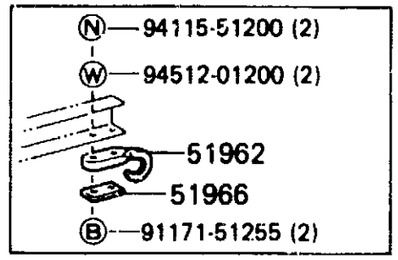

MB K246

FR

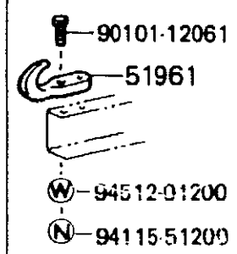

RR (8008-8411)

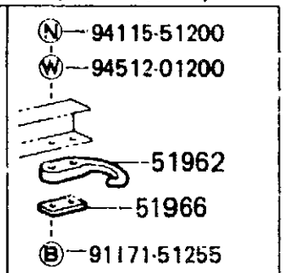

W/ Pintle Hook

※(8008-8411)

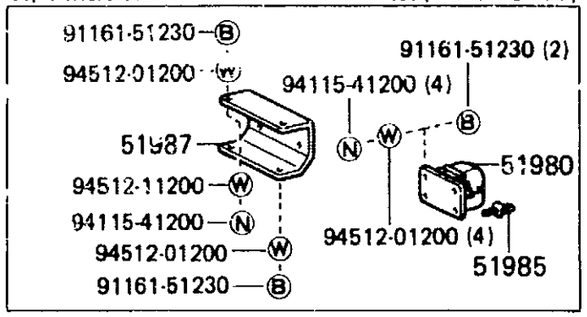

RR (8411-)

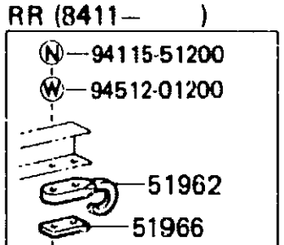

MB B727-E

	PROD.DATE	MODELS	DESCRIPTION	R/P	PART NUMBER	QTY	REV.REF.CODE FROM	REV.REF.CODE UP TO
	FIG.	51-52 SUSPENSION CROSSMEMBER & UNDER COVER						
		51441	COVER, ENGINE UNDER, NO.1					
	8008-8510	BJ60			51441-60070-	1	455	566
C	8008-8604	FJ60			# 51441-60060- (51441-60061-)	1	455	572
C	8604-	FJ60			51441-60061-	1	573	
	8510-	HJ60				1	567	
		51443	COVER, ENGINE UNDER, REAR RH					
	8008-8411	BJ60			51443-60050-	1	455	514
	8411-8510	BJ60			51443-60051-	1	515	566
	8008-8510	FJ60,,WGV			# 51443-60030- (51443-60031-)	1	455	566
	8510-	HJ60			51443-60100-	1	567	
		51444	COVER, ENGINE UNDER, REAR LH					
	8008-8411	BJ60			51444-60060-	1	455	514
	8008-8411	FJ60			51444-60040-	1	455	514
	8411-	FJ60			51444-60041-	1	515	
	8510-	HJ60			51444-60070-	1	567	
		51449A	COVER, ENGINE SIDE UNDER, LH					
C	8008-8608	FJ60,,WGG			51449-60010-	1	455	600
		51495	COVER, TRANSMISSION UNDER					
	8110-8411	BJ60			51495-60090-	1	459	514
	8008-8110	BJ60,FJ60,,WGV			51495-60070-	1	455	458
	8411-	BJ60,HJ60,,MTM			51495-60091-	1	515	
C	8504-	FJ60			51405-60060-	1	555	
C	8008-8504	FJ60,,WGG			51405-60020-	1	455	554
	8510-	HJ60,,ATM			51495-60140-	1	567	
		51496	COVER, TRANSMISSION UNDER, NO.2					
	8510-	HJ60,,ATM			51496-60040-	1	567	

	PROD.DATE	MODELS	DESCRIPTION	R/P	PART NUMBER	QTY	REV.REF.CODE FROM	REV.REF.CODE UP TO
		51961	HOOK, NO.1					
	8008-	BJ60,HJ60,FJ60			51961-60010-	1	455	
		51962	HOOK, NO.2					
	8008-8411	BJ60,FJ60			51965-60010-	1	455	514
	8411-	BJ60,HJ60,FJ60			51961-36040-	1	515	
		51966	RETAINER, REAR HOOK					
	8008-	BJ60,HJ60,FJ60			51966-60010-	1	455	
		51980	HOOK ASSY, PINTLE					
	8008-8110	BJ60,FJ60			51980-60010-	1	455	458
C	8110-8608	FJ60				1	459	600
		51985	HOOK, EYELET PINTLE					
	8008-8110	BJ60,FJ60			51985-60011-	2	455	458
C	8110-8608	FJ60				2	459	600
		51987	BRACKET, PINTLE HOOK					
	8008-8110	BJ60,FJ60			51987-60010-	1	455	458
	8110-8411	FJ60				1	459	514
C	8411-8608	FJ60			51987-60030-	1	515	600

GENUINE TOYOTA PARTS

FIG. 51-53 SPARE WHEEL CARRIER

(8008-)

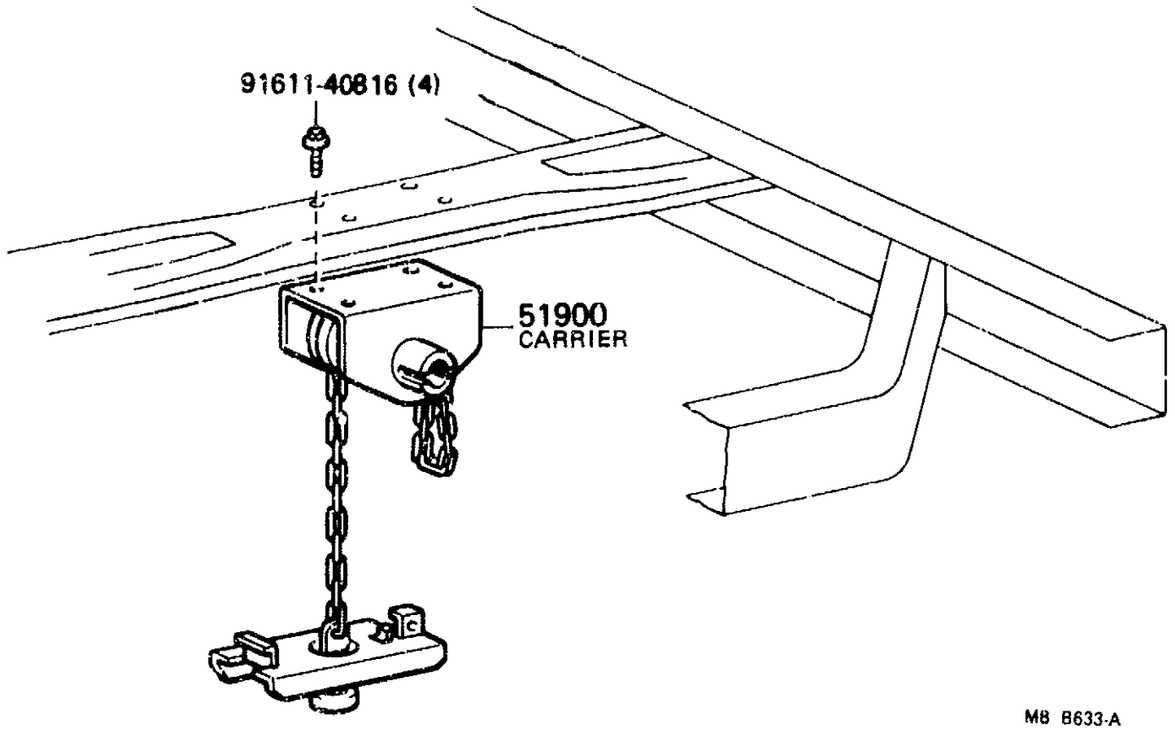

PROD.DATE	MODELS	DESCRIPTION	R/P	PART NUMBER	QTY	REV.REF.CODE FROM	REV.REF.CODE UP TO
FIG.	51-53 SPARE WHEEL CARRIER						
	51900 CARRIER ASSY, SPARE WHEEL						
8008-	BJ60,HJ60,FJ60			51900-60100-	1	455	

FIG.52-51 CAB MOUNTING & BODY MOUNTING

3-G1

MR4-11-0463

(8008-8411); (8411-8504)FJ60

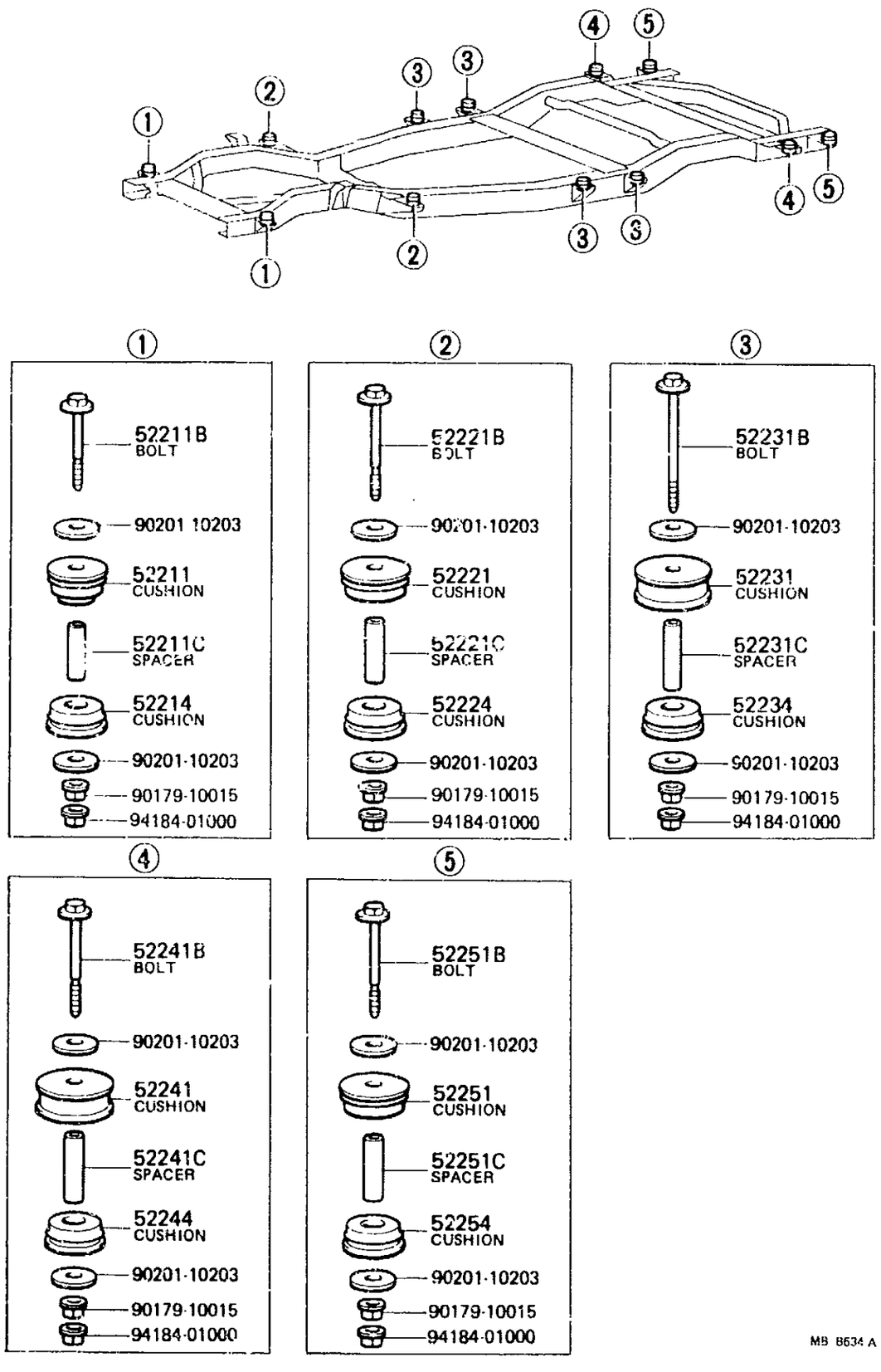

(8411-)BJ60; (8504-)FJ60

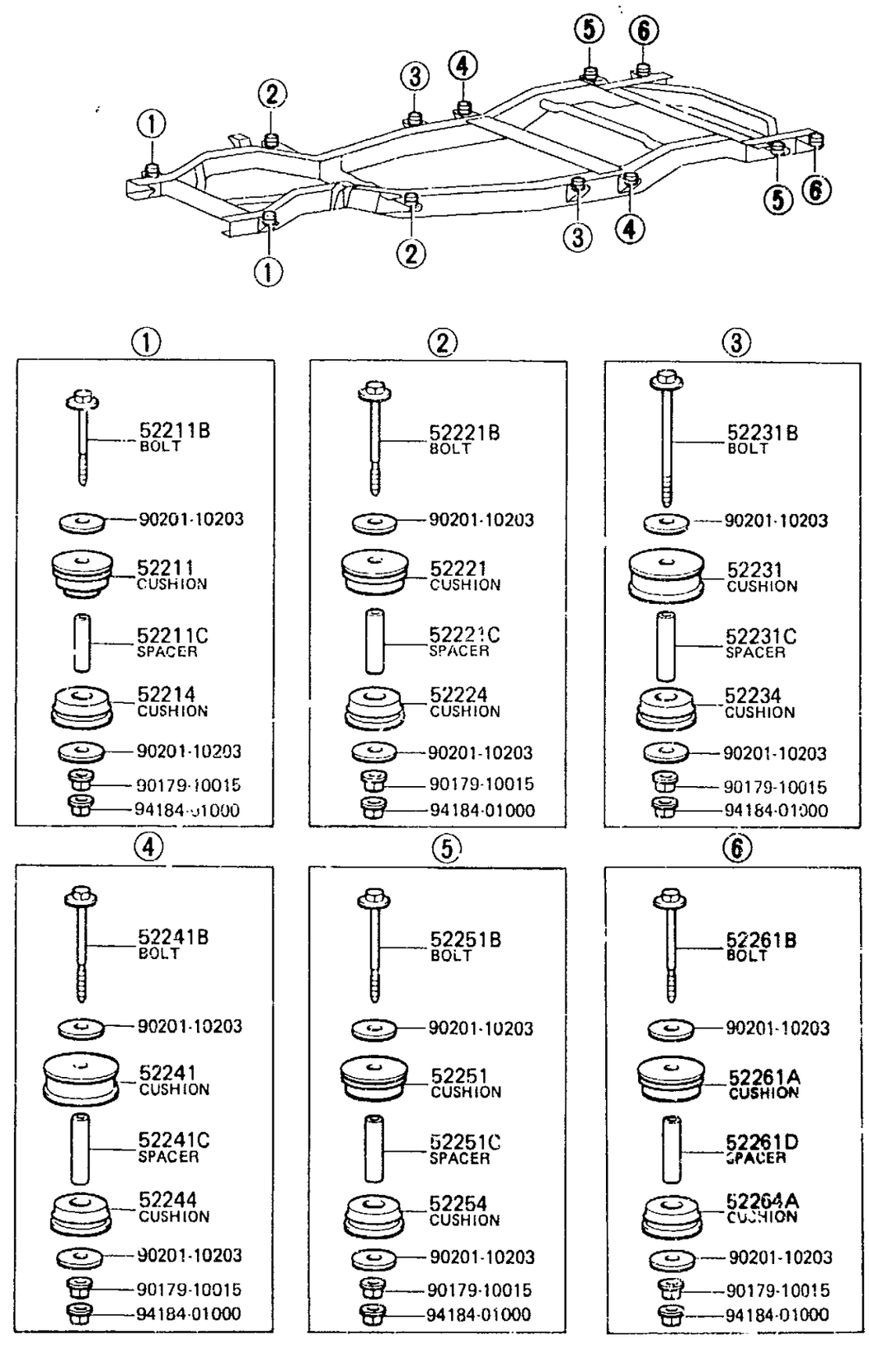

MBB634A

MBH712

PROD.DATE	MODELS	DESCRIPTION	R/P	PART NUMBER	QTY	REV.REF.CODE FROM	REV.REF.CODE UP TO
FIG.	52-51 CAB MOUNTING & BODY MOUNTING						
	52211 CUSHION, BODY MOUNT, NO.1 UPPER						
8008-	BJ60,HJ60,FJ60			52201-35021-	2	455	
	52211B BOLT (FOR BODY MOUNT NO.1 CUSHION)						
8008-	BJ60,HJ60,FJ60			90105-10039-	2	455	
	52211C SPACER (FOR BODY MOUNT NO.1 CUSHION)						
8008-	BJ60,HJ60,FJ60			90440-16007-	2	455	
	52214 CUSHION, BODY MOUNT, NO.1 LOWER						
8008-	BJ60,HJ60,FJ60			52202-35021-	2	455	
	52221 CUSHION, BODY MOUNT, NO.2 UPPER						
8008-	BJ60,HJ60,FJ60			52201-25020-	2	455	
	52221B BOLT (FOR BODY MOUNT NO.2 CUSHION)						
8008-	BJ60,HJ60,FJ60			90105-10039-	2	455	
	52221C SPACER (FOR BODY MOUNT NO.2 CUSHION)						
8008-	BJ60,HJ60,FJ60			90440-17021-	2	455	
	52224 CUSHION, BODY MOUNT, NO.2 LOWER						
8008-	BJ60,HJ60,FJ60			52202-25020-	2	455	
	52231 CUSHION, BODY MOUNT NO.3 UPPER						
8411-8504	BJ60			52203-60030-	2	515	554
8008-8411	BJ60,FJ60			90540-17002-	4	455	514
8504-	BJ60,HJ60,FJ60			52203-60030-	2	555	
8411-8504	FJ60			90540-17002-	4	515	554
	52231B BOLT (FOR BODY MOUNT NO.3 CUSHION)						
8411-8504	BJ60			90105-10029-	2	515	554
8008-8411	BJ60,FJ60				4	455	514
8504-	BJ60,HJ60,FJ60				2	555	
8411-8504	FJ60				4	515	554
	52231C SPACER (FOR BODY MOUNT NO.3 CUSHION)						
8411-8504	BJ60			90560-12233-	2	514	554
8008-8411	BJ60,FJ60				4	455	514
8504-	BJ60,HJ60,FJ60				2	555	
8411-8504	FJ60				4	515	554
	52234 CUSHION, BODY MOUNT NO.3, LOWER						
8411-8504	BJ60			52023-60011-	2	514	554
8008-8411	BJ60,FJ60				4	455	514
8504-	BJ60,HJ60,FJ60				2	555	
8411-8504	FJ60				4	515	554
	52241 CUSHION, BODY MOUNT NO.4, UPPER						
8411-8504	BJ60			52207-60010-	2	515	554
8008-8411	BJ60,FJ60			90540-17002-	2	455	514
8504-	BJ60,HJ60,FJ60			52207-60010-	2	555	
8411-8504	FJ60			90540-17002-	2	515	554
	52241B BOLT (FOR BODY MOUNT NO.4 CUSHION)						
8411-8504	BJ60			90105-10029-	2	515	554
8008-8411	BJ60,FJ60			90105-10039-	2	455	514
8504-	BJ60,HJ60,FJ60			90105-10029-	2	555	
8411-8504	FJ60			90105-10039-	2	515	554
	52241C SPACER (FOR BODY MOUNT NO.4 CUSHION)						
8008-	BJ60,HJ60,FJ60			90560-12233-	2	455	
	52244 CUSHION, BODY MOUNT NO.4, LOWER						
8411-8504	BJ60			52208-60010-	2	515	554
8008-8411	BJ60,FJ60			52023-60011-	2	455	514
8504-	BJ60,HJ60,FJ60			52208-60010-	2	555	
8411-8504	FJ60			52023-60011-	2	514	554
	52251 CUSHION, BODY MOUNT NO.5, UPPER						
8411-8504	BJ60			52203-60030-	2	515	554

GENUINE TOYOTA PARTS

PROD DATE	MODELS	DESCRIPTION	R/P	PART NUMBER	QTY	REV.REF.CODE FROM	REV.REF.CODE UP TO
	52251 CUSHION, BODY MOUNT NO.5, UPPER CONTINUED						
8008-8411	BJ60,FJ60			52201-25020-	2	455	514
8504-	BJ60,HJ60,FJ60			52203-60030-	2	555	
8411-8504	FJ60			52201-25020-	2	515	554
	52251B BOLT (FOR BODY MOUNT NO.5 CUSHION)						
8008-	BJ60,HJ60,FJ60			90105-10039-	2	455	
	52251C SPACER (FOR BODY MOUNT NO.5 CUSHION)						
8411-8504	BJ60			90560-12233-	2	515	554
8008-8411	BJ60,FJ60			90440-17021-	2	455	514
8504-	BJ60,HJ60,FJ60			90560-12233-	2	555	
8411-8504	FJ60			90440-17021-	2	515	554
	52254 CUSHION, BODY MOUNT NO.5, LOWER						
8411-85	BJ60			52023-60011-	2	515	554
8008-8411	BJ60,FJ60			52202-[illegible]20-	2	455	514
8504-	BJ60,HJ60,FJ60			52023-60011-	2	555	
8411-8504	FJ60			52202-25020-	2	515	554
	52261A CUSHION, BODY MOUNT NO.6, UPPER						
8411-8504	BJ60			52201-25020-	2	515	554
8504-	BJ60,HJ60,FJ60				2	555	
	52261B BOLT (FOR BODY MOUNT NO.6 CUSHION)						
8411-8504	BJ60			90105-10039-	2	515	554
8504-	BJ60,HJ60,FJ60				2	555	
	52261D SPACER (FOR BODY MOUNT NO.6 CUSHION)						
8411-8504	BJ60			90440-17021-	2	515	554
8504-	BJ60,HJ60,FJ60				2	555	
	52264A CUSHION, BODY MOUNT NO.6, LOWER						
8411-8504	BJ60			52202-25020-	2	515	554
8504-	BJ60,HJ60,FJ60				2	555	

GENUINE TOYOTA PARTS

PROD.DATE	MODELS	DESCRIPTION	R/P	PART NUMBER	QTY	REV.REF.CODE FROM	REV.REF.CODE UP TO

FIG.52-52 FRONT BUMPER & BUMPER STAY

3-J1

MR4-13-0250

(8008-)

W/O Winch

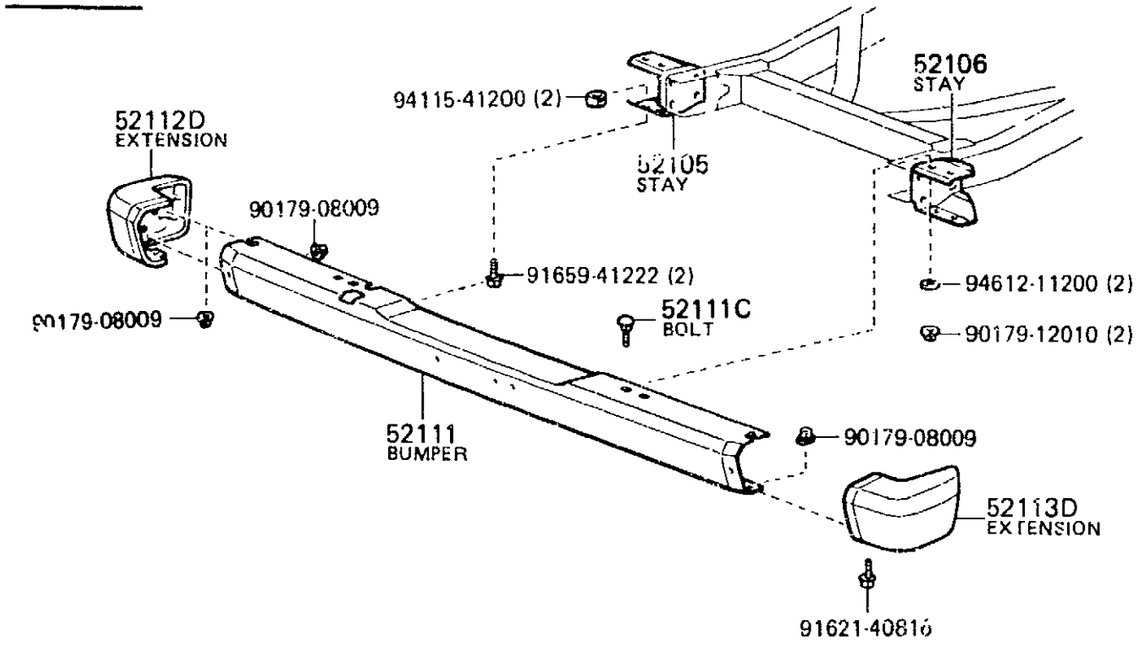

W/Winch

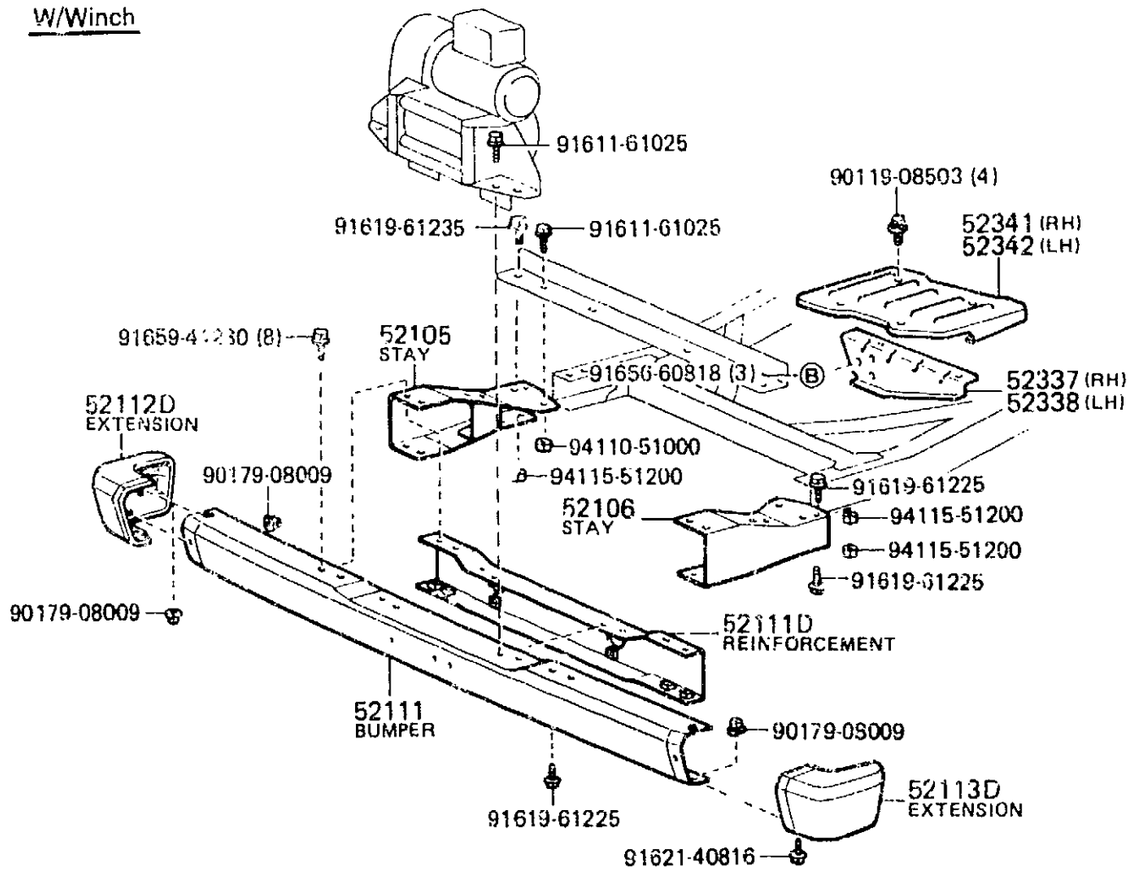

MB B635-G

GENUINE TOYOTA PARTS

	PROD.DATE	MODELS	DESCRIPTION	R/P	PART NUMBER	QTY	REV.REF.CODE FROM	REV.REF.CODE UP TO
	FIG.	52-52 FRONT BUMPER & BUMPER STAY						
		52105 STAY SUB-ASSY, FRONT BUMPER, RH						
	8411-8504	BJ60	W/WINCH		52130-60011-	1	515	554
	8008-8411	BJ60,FJ60	W/WINCH		52130-60010-	1	455	514
	8504-8507	BJ60,FJ60	W/WINCH		52130-60011-	1	555	
	8008-	BJ60,HJ60,FJ60	W/O WINCH		52141-60030-	1	455	
	8411-8504	FJ60	W/WINCH		52130-60010-	1	515	554
C	8507-8510	FJ60	W/WINCH		52130-60011-	1		566
		52106 STAY SUB-ASSY, FRONT BUMPER, LH						
	8411-8504	BJ60	W/WINCH		52140-60011-	1	515	554
	8008-8411	BJ60,FJ60	W/WINCH		52140-60010-	1	455	514
	8504-8507	BJ60,FJ60	W/WINCH		52140-60011-	1	555	
	8008-	BJ60,HJ60,FJ60	W/O WINCH		52142-60030-	1	455	
	8411-8504	FJ60	W/WINCH		52140-60010-	1	515	554
C	8507-8510	FJ60	W/WINCH		52140-60011-	1		566
		52111 BUMPER ASSY, FRONT						
	8411-8504	BJ60	CHROME,W/WINCH		52111-60141-	1	515	554
	8008-8411	BJ60,FJ60	W/WINCH		52111-60130-	1	455	514
	8008-8411	BJ60,FJ60	CHROME,W/WINCH		52111-60140-	1	455	514
	8008-8504	BJ60,FJ60	W/O WINCH		52111-60110-	1	455	554
	8411-8507	BJ60,FJ60	W/WINCH		52111-60131-	1	515	
C	8504-8604	BJ60,HJ60	W/O WINCH		52111-60110-	1	555	572
	8008-	BJ60,HJ60,FJ60	CHROME,W/O WINCH		52111-60120-	1	455	
	8411-8504	FJ60	W/WINCH		52111-60130-	1	515	554
	8411-8504	FJ60	CHROME,W/WINCH		52111-60140-	1	515	554
C	8504-8510	FJ60	CHROME,W/WINCH		52111-60141-	1	555	566
C	8507-8510	FJ60	W/WINCH		52111-60131-	1		566
C	8604-	HJ60,FJ60	W/O WINCH		52111-60110-	1	572	

GENUINE TOYOTA PARTS

	PROD.DATE	MODELS	DESCRIPTION	R/P	PART NUMBER	QTY	REV.REF.CODE FROM	REV.REF.CODE UP TO
		52111C BOLT, ROUND HEAD SQUARE NECK (FOR FRONT BUMPER)						
	8008-	BJ60,HJ60,FJ60	W/O WINCH		90112-12041-	4	455	
		52111D REINFORCEMENT, FRONT BUMPER						
	8008-8507	BJ60,FJ60	W/WINCH		52131-60020-	1	455	
C	8507-8510	FJ60	W/WINCH			1		566
		52112D EXTENSION, FRONT BUMPER, RH						
	8008-	BJ60,HJ60,FJ60			52102-60010-	1	455	
		52113D EXTENSION, FRONT BUMPER, LH						
	8008-	BJ60,HJ60,FJ60			52103-60010-	1	455	
		52337 STAY, FRONT BUMPER STEP, RH						
	8411-8502	BJ60	W/WINCH		52337-90A00-	1	515	566
C	8504-8510	FJ60	W/WINCH			1	555	566
		52338 STAY, FRONT BUMPER STEP, LH						
	8411-8502	BJ60	W/WINCH		52338-90A00-	1	515	566
C	8504-8510	FJ60	W/WINCH			1	555	566
		52341 STEP, FRONT BUMPER, RH						
	8411-8502	BJ60	W/WINCH		52341-90A00-	1	515	
	8411-8502	BJ60	CHROME,W/WINCH		52341-90A01-	1	515	
C	8504-8510	FJ60	W/WINCH		52341-90A00-	1	555	566
C	8504-8510	FJ60	CHROME,W/WINCH		52341-90A01-	1	555	566
		52342 STEP, FRONT BUMPER, LH						
	8411-8502	BJ60	W/WINCH		52342-90A00-	1	515	
	8411-8502	BJ60	CHROME,W/WINCH		52342-90A01-	1	515	
C	8504-8510	FJ60	W/WINCH		52342-90A00-	1	555	566
C	8504-8510	FJ60	CHROME,W/WINCH		52342-90A01-	1	555	566

PROD.DATE	MODELS	DESCRIPTION	R/P	PART NUMBER	QTY	REV.REF.CODE FROM	REV.REF.CODE UP TO

(8008–)

(8008–8510)

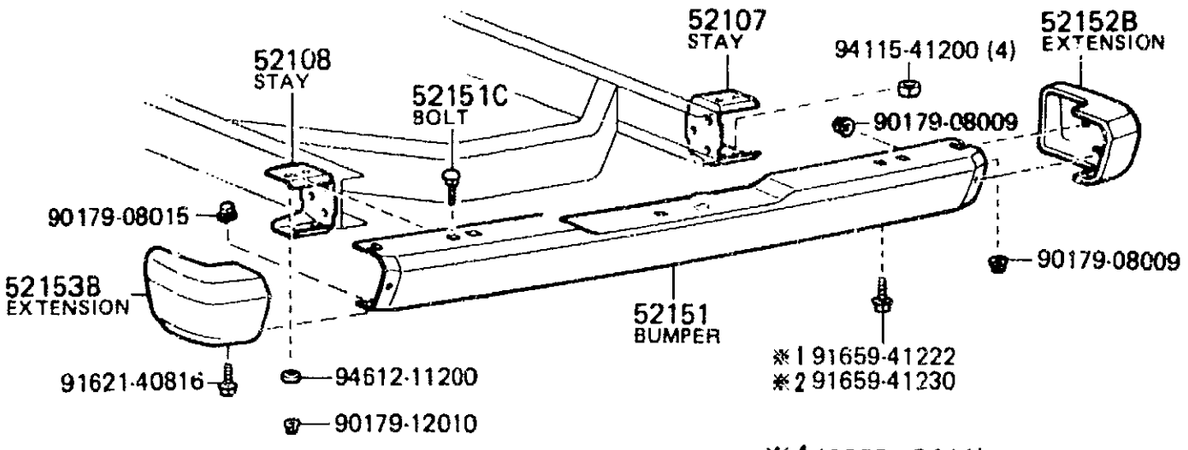

※1 (8008–8411)
※2 (8411–8510)

(8510–)

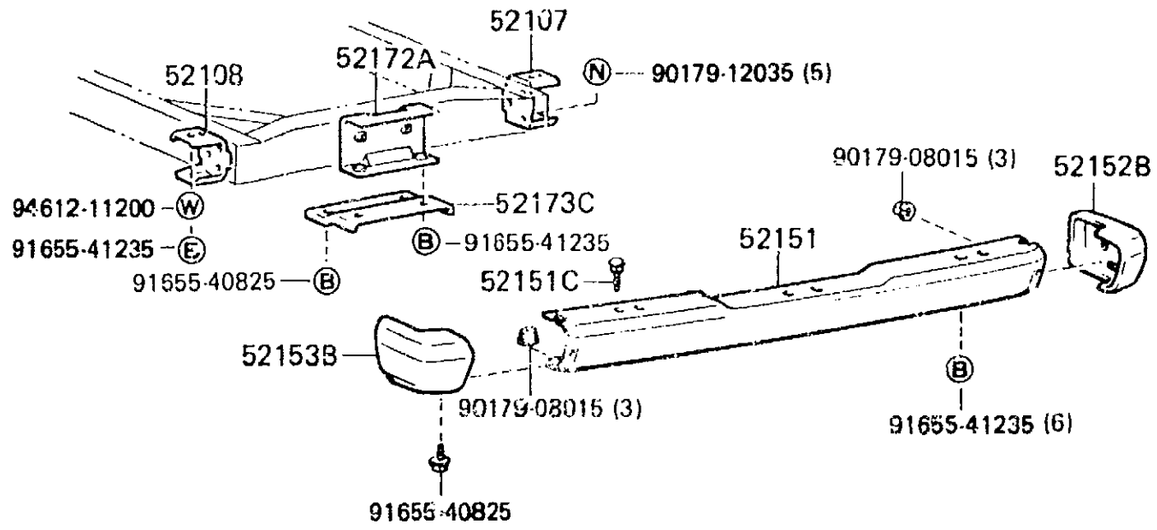

MB H713-B

GENUINE TOYOTA PARTS

PROD. DATE	MODELS	DESCRIPTION	R/P	PART NUMBER	QTY	REV. REF. CODE FROM	REV. REF. CODE UP TO
FIG.	52-53 REAR BUMPER & BUMPER STAY						
	52107 STAY SUB-ASSY, REAR BUMPER, RH						
8008–	BJ60,HJ60,FJ60			52153-60060–	1	455	
	52108 STAY SUB-ASSY, REAR BUMPER, LH						
8008–	BJ60,HJ60,FJ60			52154-60010–	1	455	
	52151 BUMPER ASSY, REAR						
8411–8504	BJ60			52151-60031–	1	515	554
8411–8504	BJ60	CHROME		52151-60041–	1	515	554
8008–8411	BJ60,FJ60		#	52151-60030– (52151-60031–)	1	455	514
8008–8411	BJ60,FJ60	CHROME	#	52151-60040– (52151-60041–)	1	455	514
8504–	BJ60,HJ60,FJ60			52151-60031–	1	555	
8504–	BJ60,HJ60,FJ60	CHROME		52151-60041–	1	555	
8411–8504	FJ60		#	52151-60030– (52151-60031–)	1	515	554
8411–8504	FJ60	CHROME	#	52151-60040– (52151-60041–)	1	515	554
	52151C BOLT, ROUND HEAD SQUARE NECK (FOR REAR BUMPER)						
8411–8504	BJ60			90112-12041–	6	515	554
8008–8411	BJ60,FJ60				7	455	514
8504–	BJ60,HJ60,FJ60				6	555	
8411–8504	FJ60				7	515	554
	52152B EXTENSION, REAR BUMPER, RH						
8008–	BJ60,HJ60,FJ60			52106-60010–	1	455	
	52153B EXTENSION, REAR BUMPER, LH						
8008–	BJ60,HJ60,FJ60			52107-60010–	1	455	
	52172A REINFORCEMENT, REAR BUMPER BAR, CENTER						
8510–	HJ60			52172-60020–	1	557	
	52173C REINFORCEMENT, REAR BUMPER, NO.3						
8510–	HJ60			52173-60050–	1	567	

FIG. 53-51 RADIATOR GRILLE

(8008-)

3-M1

HR4-13-0252

GENUINE TOYOTA PARTS

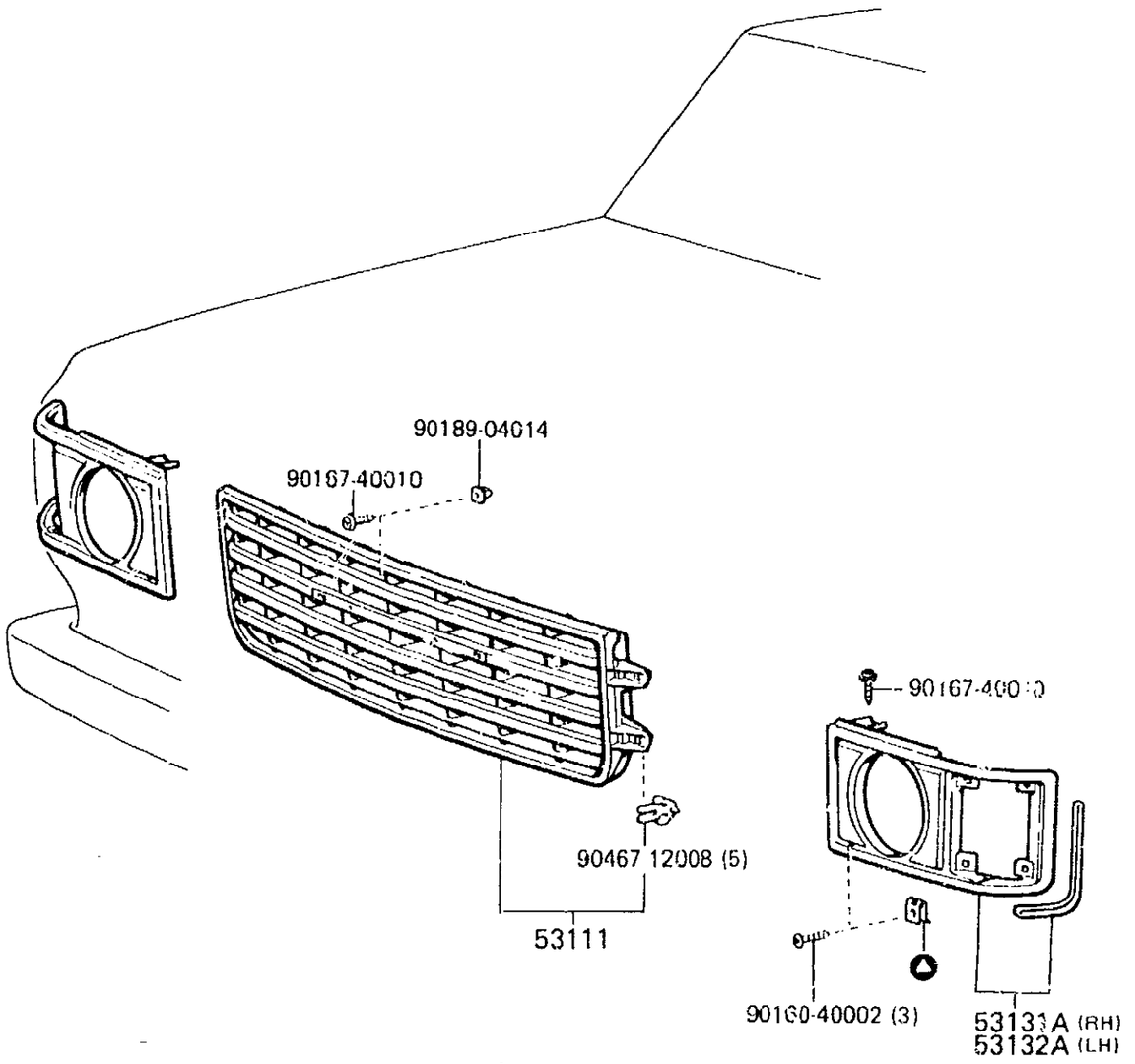

90183-04083 (4)	90189-04009 (4)

MB H716-B

PROD. DATE	MODELS	DESCRIPTION	R/P	PART NUMBER	QTY	REV. REF. CODE FROM	REV. REF. CODE UP TO
FIG.	53-51 RADIATOR GRILLE						
	53111 : GRILLE, RADIATOR						
8008-	BJ60,HJ60,FJ60			53111-90A00-	1	455	
8008-	BJ60,HJ60,FJ60	CHROME		53111-90A01-	1	455	
	53131A : DOOR, HEADLAMP, RH						
8008-	BJ60,HJ60,FJ60			53131-90A00-	1	455	
8008-	BJ60,HJ60,FJ60	CHROME		53131-90A01-	1	455	
	53132A : DOOR, HEADLAMP, LH						
8008-	BJ60,HJ60,FJ60			53132-90A00-	1	455	
8008-	BJ60,HJ60,FJ60	CHROME		53132-90A01-	1	455	

GENUINE TOYOTA PARTS

(8008-)

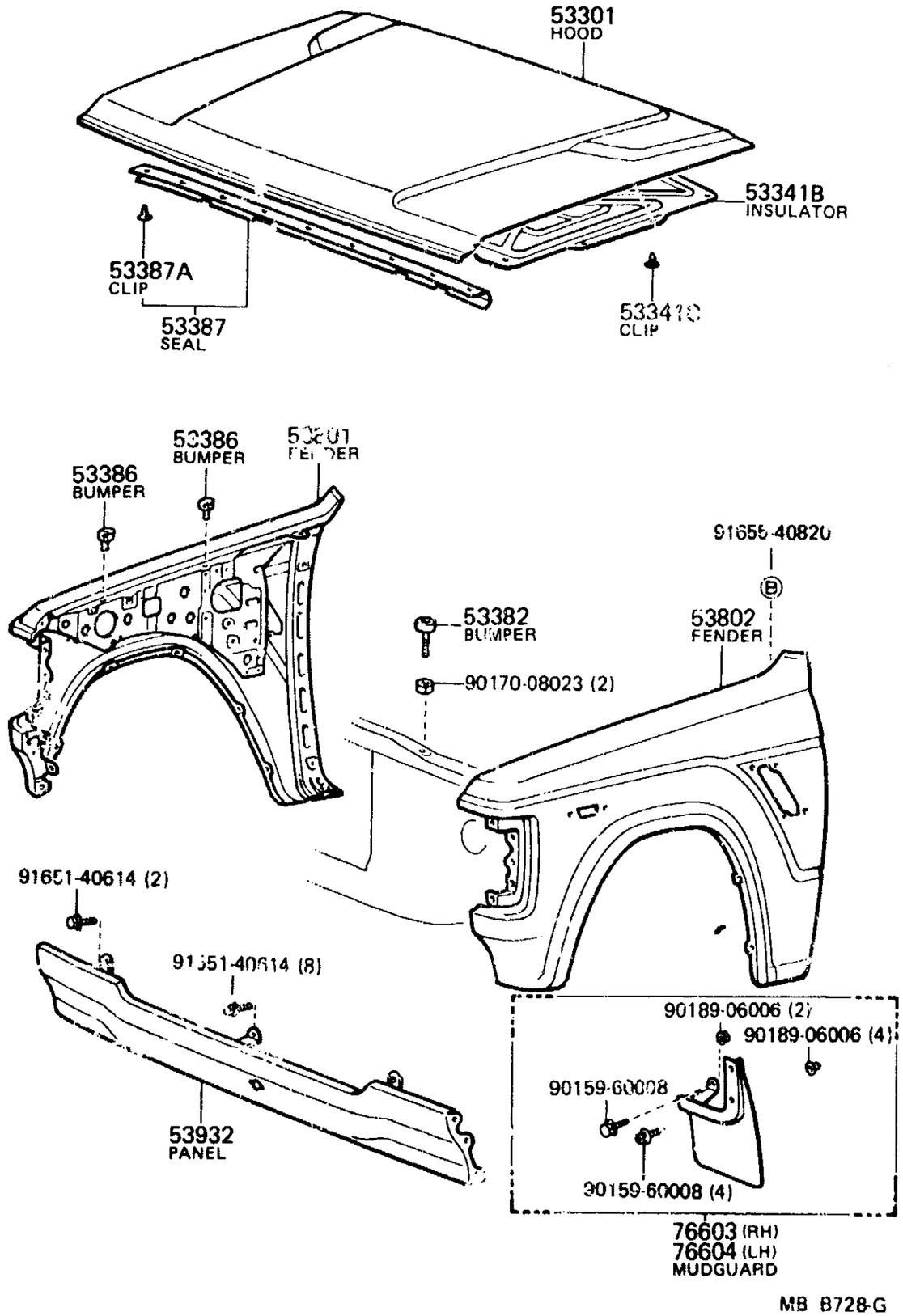

MB B728-G

	PROD.DATE	MODELS	DESCRIPTION	R/P	PART NUMBER	QTY	REV.REF.CODE FROM	REV.REF.CODE UP TO
	FIG.	53-53 HOOD & FRONT FENDER						
		53301 HOOD SUB-ASSY						
	8008-	BJ60,HJ60,FJ60			53301-90A01-	1	455	
		53341B INSULATOR, HOOD						
C	8008-	BJ60,HJ60,FJ60			53341-90A00-	1	455	
		53341C CLIP (FOR HOOD INSULATOR)						
	8008-	BJ60,HJ60,FJ60			90467-09014-	19	455	
		53382 BUMPER, HOOD, FRONT						
	8008-8511	BJ60,HJ60,FJ60			# 53382-20011- (53382-90A00-)	2	455	
C	8511-	HJ60,FJ60			53382-90A00-	2		
		53386 BUMPER, HOOD, REAR						
	8008-	BJ60,HJ60,FJ60			53382-30060-	4	455	
		53387 SEAL, HOOD TO RADIATOR SUPPORT						
	8008-	BJ60,HJ60,FJ60			53381-90A00-	1	455	
		53387A CLIP, (FOR HOOD TO RADIATOR SUPPORT SET)						
	8008-8109	BJ60,FJ60			90467-08008-	9	455	
	8109-	BJ60,HJ60,FJ60			90467-08011-	9		
		53801 FENDER SUB-ASSY, FRONT, RH						
	8008-8110	BJ60,FJ60..WGV			53801-90A02-	1	455	458
	8110-	BJ60,HJ60				1	459	
C	8603-	FJ60	W/MOULDING		53801-90A79-	1		
C	8008-8603	FJ60..WGG	W/MOULDING		53801-90A04-	1	455	
		53802 FENDER SUB-ASSY, FRONT, LH						
	8008-8110	BJ60,FJ60..WGV			53802 2-	1	455	458
	8110-	BJ60,HJ60				1	459	
C	8603-	FJ60	W/MOULDING		53802-90A59-	1		
C	8008-8603	FJ60..WGG	W/MOULDING		53802-90A04-	1	455	

GENUINE TOYOTA PARTS

PROD.DATE	MODELS	DESCRIPTION	R/P	PART NUMBER	QTY	REV.REF.CODE FROM	REV.REF.CODE UP TO
	53932 PANEL SUB-ASSY, FRONT END						
8411-8504	BJ60			53903-90A08-	1	515	554
8008-8110	BJ60,FJ60	W/HEADLAMP CLEANER		53903-90A03-	1	455	458
8008-8411	BJ60,FJ60	W/O HEADLAMP CLEANER		53903-90A02-	1	455	514
8504-	BJ60,HJ60,FJ60			53903-90A08-	1	555	
8110-8411	FJ60	W/HEADLAMP CLEANER		53903-90A03-	1	459	514
8411-8504	FJ60	W/O HEADLAMP CLEANER		53903-90A02-	1	515	554
8504-	FJ60	W/HEADLAMP CLEANER		53903-90A09-	1	555	
	76603 MUDGUARD SUB-ASSY, FRONT FENDER, RH						
8008-	BJ60,HJ60,FJ60			76603-69015-	1	455	
	76604 MUDGUARD SUB-ASSY, FRONT FENDER, LH						
8008-	BJ60,HJ60,FJ60			76604-69015-	1	455	

PROD.DATE | MODELS | DESCRIPTION | R/P | PART NUMBER | QTY | REV.REF.CODE FROM | REV.REF.CODE UP TO

FIG.53-54 HOOD LOCK & HINGE

(8008--)

WGV

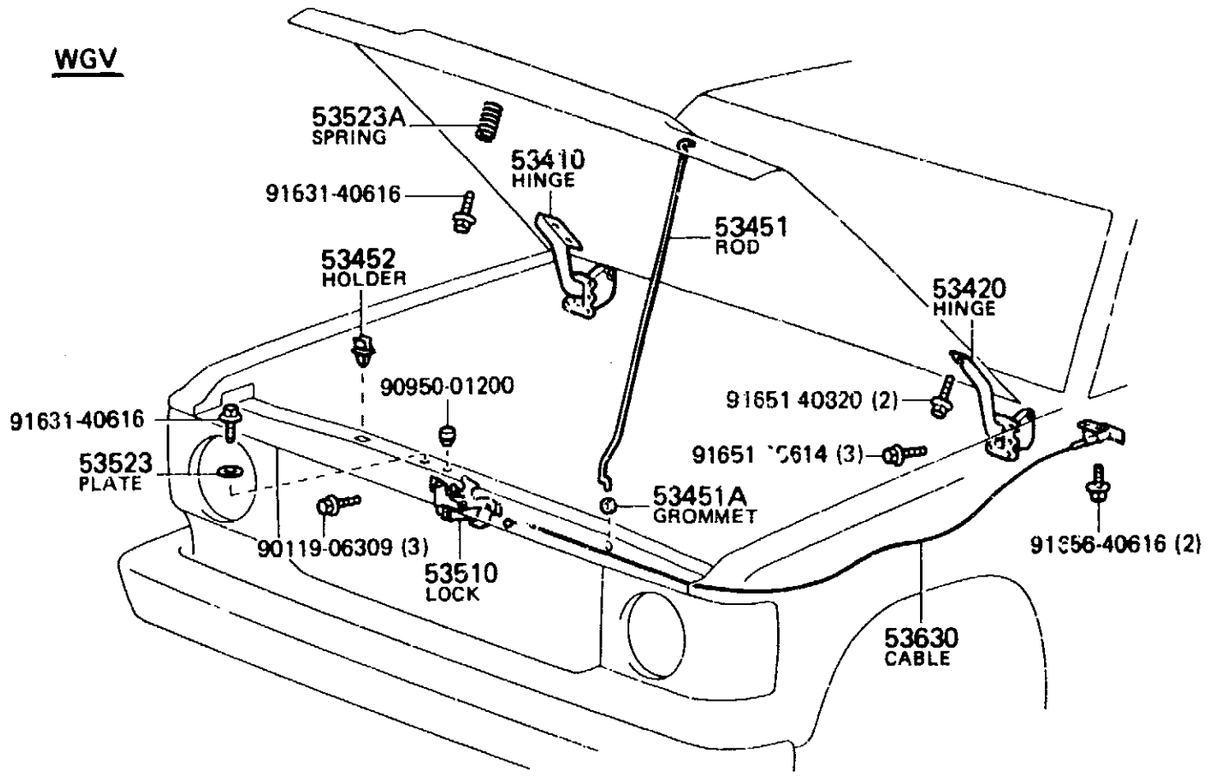

WGG

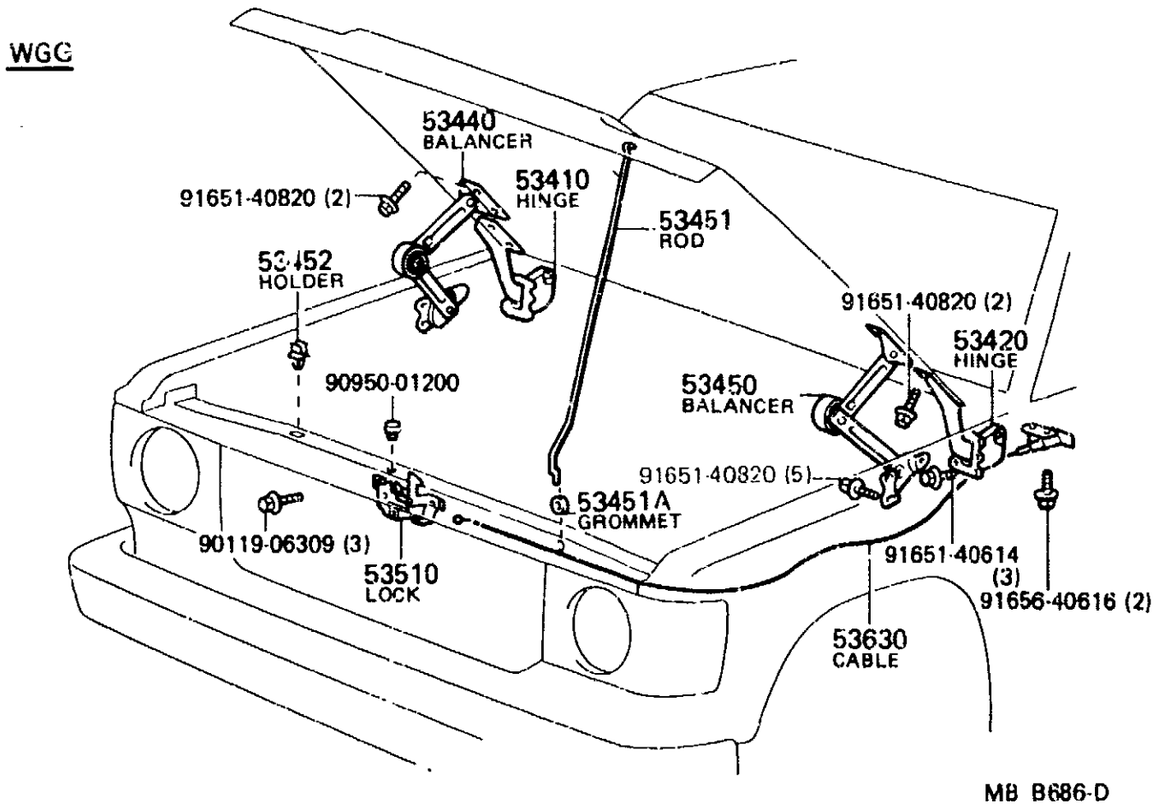

MB B686-D

GENUINE TOYOTA PARTS

PROD.DATE	MODELS	DESCRIPTION	R/P	PART NUMBER	QTY	REV.REF.CODE FROM	REV.REF.CODE UP TO
FIG.	53-54 HOOD LOCK & HINGE						
	53410 HINGE ASSY, HOOD, RH						
8008-	BJ60,HJ60,FJ60			53410-90A00-	1	455	
	53420 HINGE ASSY, HOOD, LH						
8008-	BJ60,HJ60,FJ60			53420-90A00-	1	455	
	53440 BALANCER ASSY, HOOD, RH						
8110-	BJ60,HJ60,FJ60			53440-90A00-	1	459	
8008-8110	FJ60..WGG				1	455	458
	53450 BALANCER ASSY, HOOD, LH						
8110-	BJ60,HJ60,FJ60			53450-90A00-	1	459	
8008-8110	FJ60..WGG				1	455	458
	53451 ROD, HOOD SUPPORT						
8008-	BJ60,HJ60,FJ60			53451-90A00-	1	455	
	53451A GROMMET (FOR HOOD SUPPORT ROD)						
8008-	BJ60,HJ60,FJ60			90480-15002-	1	455	
	53452 HOLDER, HOOD STAY						
8008-	BJ60,HJ60,FJ60			53452-90351-	1	455	
	53510 LOCK ASSY, HOOD						
8008-	BJ60,HJ60,FJ60			53510-90A01-	1	455	
	53523 PLATE, HOOD LOCK AUXILIARY SPRING						
8008-8110	BJ60,FJ60..WGV			53523-90A00-	1	455	458
	53523A SPRING, HOOD LOCK AUXILIARY						
8008-8110	BJ60,FJ60..WGV			90504-29001-	1	455	458
	53630 CABLE ASSY, HOOD LOCK CONTROL						
8008-8205	BJ60,FJ60			* 53630-90A00- (53630-90A01-)	1	455	
8205-	BJ60,HJ60,FJ60			53630-90A01-	1		

(8008-)

ILLUST•NO• 1OF2

Cold Spec

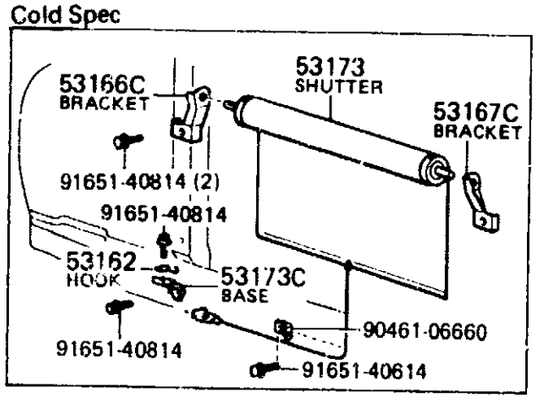

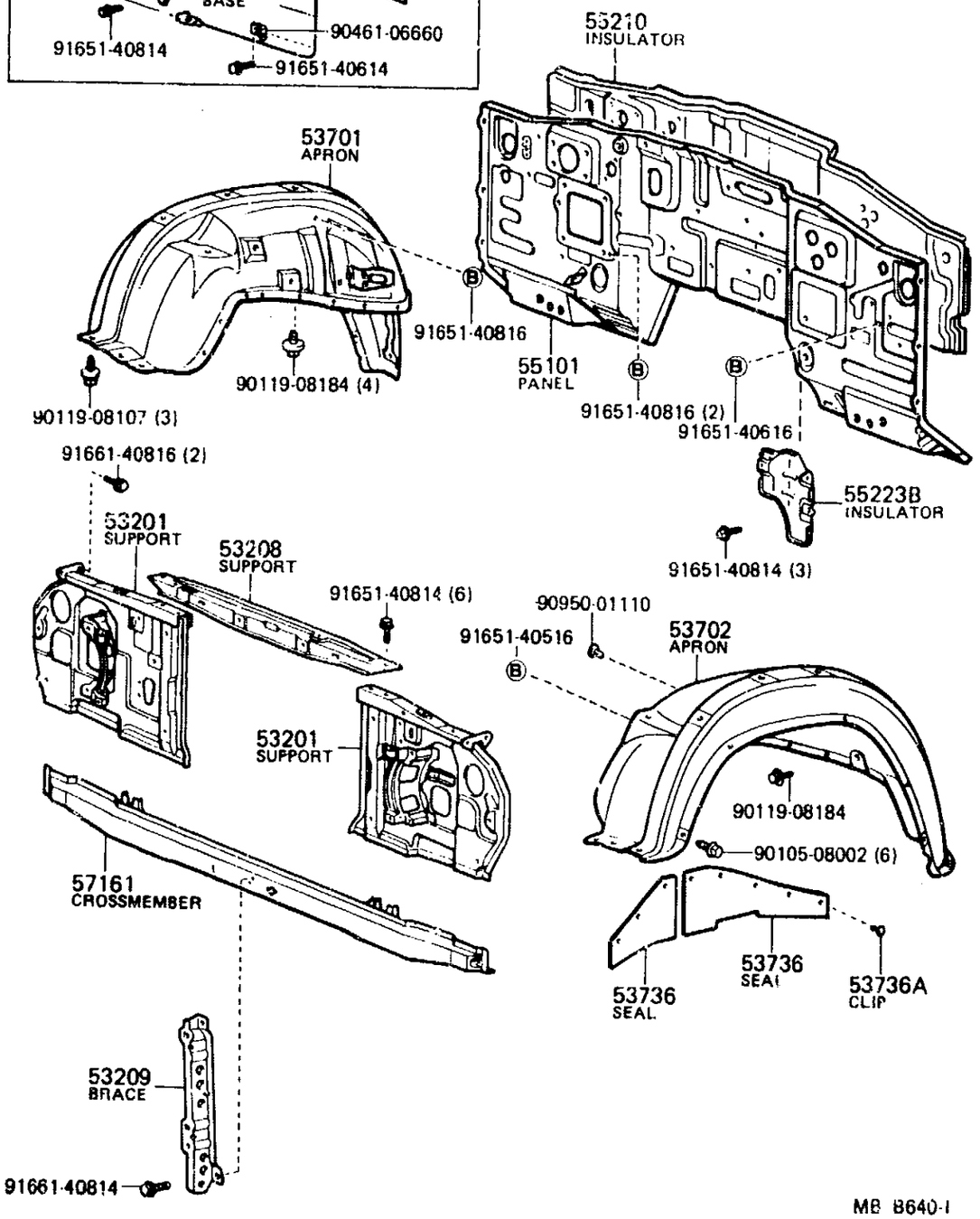

MB 8640-I

(8008-)

ILLUST•NO• 2OF2

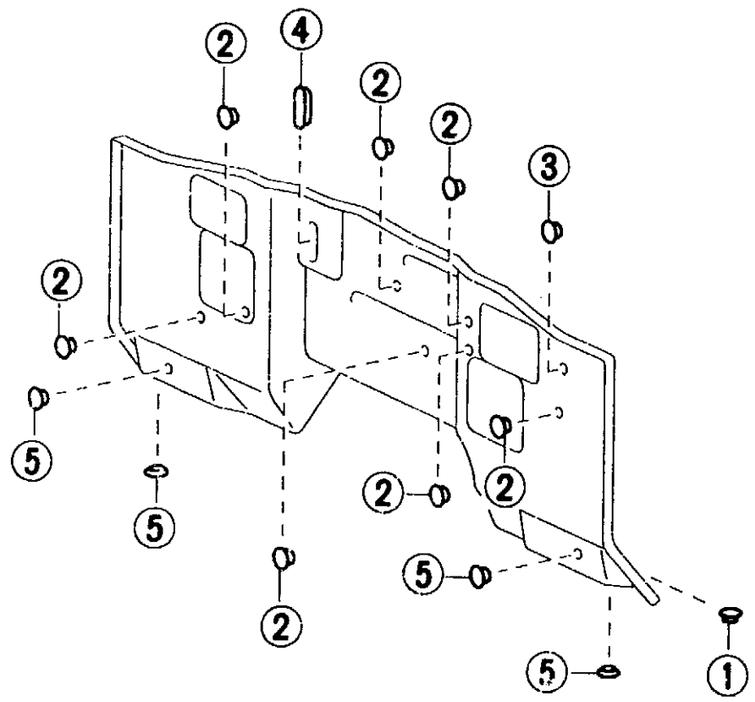

①	②	③	④
90950-01205	90950-01006	90950-01056	90950-01003

⑤
90950-01257

MB C463

	PROD.DATE	MODELS	DESCRIPTION	R/P	PART NUMBER	QTY	REV.REF.CODE FROM	REV.REF.CODE UP TO
	FIG.	53-55 FRONT FENDER APRON & DASH PANEL						
		53162 HOOK, RADIATOR SHUTTER						
	8008-	BJ60,HJ60			53162-90500-	1	455	
		53166C BRACKET, RADIATOR SHUTTER SUPPORT, RH						
	8008-	BJ60,HJ60			53188-90A00-	1	455	
	8411-	BJ60,HJ60	W/COOLER		53188-90A01-	1	515	
		53167C BRACKET, RADIATOR SHUTTER SUPPORT, LH						
	8008-	BJ60,HJ60			53189-90A00-	1	455	
	8411-	BJ60,HJ60	W/COOLER		53189-90A01-	1	515	
		53173 SHUTTER SUB-ASSY, RADIATOR WIND						
	8008-	BJ60,HJ60			53180-90A00-	1	455	
		53173C BASE, RADIATOR SHUTTER CONTROL WIRE CLAMP						
	8008-	BJ60,HJ60			53191-90A00-	1	455	
		53201 SUPPORT SUB-ASSY, RADIATOR						
C	8008-8604	BJ60,HJ60,FJ60	LH		53203-90A01-	1	455	572
	8008-	BJ60,HJ60,FJ60	RH		53202-90A01-	1	455	
C	8604-	FJ60	LH		53203-90A03-	1	573	
C	8604-	HJ60	LH		53203-90A01-	1	573	
		53208 SUPPORT SUB-ASSY, RADIATOR GRILLE, CENTER						
	8411-8504	BJ60			53216-90A01-	1	515	554
	8008-8411	BJ60,FJ60		#	53216-90A00- (53216-90A01-)	1	455	514
	8504-	BJ60,HJ60,FJ60			53216-90A01-	1	555	
	8411-8504	FJ60		#	53216-90A00- (53216-90A01-)	1	515	554
		53209 BRACE SUB-ASSY, HOOD LOCK						
	8411-8504	BJ60			53209-90A01-	1	515	554
	8008-8411	BJ60,FJ60			53217-90A01-	1	455	514
	8504-	BJ60,HJ60,FJ60			53209-90A01-	1	555	
	8411-8504	FJ60			53217-90A01-	1	515	554

	PROD.DATE	MODELS	DESCRIPTION	R/P	PART NUMBER	QTY	REV.REF.CODE FROM	REV.REF.CODE UP TO
		53701 APRON SUB-ASSY, FRONT FENDER, RH						
	8008-8510	BJ60			53701-90A30-	1	455	566
	8411-8510	BJ60	W/CLUTCH BOOSTER		53701-90A51-	1	515	566
	8110-8411	FJ60		#	53701-90A01- (53701-90G01-)	1	459	514
C	8504-8604	FJ60			53701-90G01-	1	555	572
C	8604-	FJ60			53701-90G13-	1	573	
	8008-8110	FJ60..WGG		#	53701-90A32- (53701-90A47-)	1	455	458
	8008-8303	FJ60..WGG	W/WINCH	#	53701-90A17- (53701-90A01-)	1	455	
	8303-8504	FJ60..WGG	W/WINCH	#	53701-90A01- (53701-90G01-)	1		554
	8008-8110	FJ60..WGV		#	53701-90A33- (53701-90A47-)	1	455	458
	8008-8110	FJ60..WGV	W/O WINCH	#	53701-90A40- (53701-90A33-)	1	455	458
C	8510-8608	HJ60			53701-90G06-	1	567	600
C	8608-	HJ60			53701-90A75-	1	601	
		53702 APRON SUB-ASSY, FRONT FENDER, LH						
	8008-8110	BJ60			53702-90A14-	1	455	458
	8008-8110	BJ60	W/WINCH	#	53702-90A24- (53702-90A14-)	1	455	458
	8110-8411	BJ60	W/WINCH	#	53702-90A29- (53702-90A28-)	1	459	514
	8110-8510	BJ60			53702-90A28-	1	459	566
	8504-	FJ60			53702-90A69-	1	555	
	8008-8504	FJ60..WGG		#	53702-90A03- (53702-90A69-)	1	455	554
	8008-8110	FJ60..WGV		#	53702-90A20- (53702-90A33-)	1	455	458
	8510-	HJ60		#	53702-90A21- (53702-90A33-)	1	567	
		53736 SEAL, FRONT FENDER APRON, RH						
	8008-	BJ60,HJ60,FJ60	FR		53738-90A00-	2	455	
	8008-	BJ60,HJ60,FJ60	RR		53739-90A00-	2	455	

GENUINE TOYOTA PARTS

	PROD.DATE	MODELS	DESCRIPTION	R/P	PART NUMBER	QTY	REV.REF.CODE FROM	REV.REF.CODE UP TO
		53736A CLIP (FOR	FRONT FENDER APRON SEAL)					
	8008-	BJ60,HJ60,FJ60			90467-08011-	16	455	
		55101 PANEL SUB-	ASSY, DASH					
	8008-8210	BJ60		#	55101-90A15- (55101-90A41-)	1	455	466
	8210-8411	BJ60			55101-90A61-	1	467	514
	8210-8411	BJ60	W/CLUTCH BOOSTER		55101-90A90-	1	467	514
	8411-8510	BJ60			55101-90G26-	1	515	566
	8411-8510	BJ60	W/COOLER		55101-90G41-	1	515	566
	8411-8510	BJ60	W/CLUTCH BOOSTER		55101-90G43-	1	515	566
	8411-8510	BJ60	W/CLUTCH BOOSTER		55101-90G73-	1	515	566
	8210-8411	FJ60			55101-90A72-	1	467	514
	8210-8504	FJ60	W/COOLER		55101-90A74-	1	467	554
C	8504-8604	FJ60	W/COOLER		55101-90G87-	1	555	572
C	8604-	FJ60			55016-90A34-	1	573	
C	8604-	FJ60	W/COOLER		55016-90A36-	1	573	
	8008-8110	FJ60••WGG	W/O HEATER,COOLER	#	55101-90A11- (55101-90A34-)	1	455	458
	8008-8110	FJ60••WGG	W/HEATER		55101-90A34-	1	455	458
	8008-8110	FJ60••WGG	W/COOLER,W/O HEATER	#	55101-90A43- (55101-90A44-)	1	455	458
	8008-8110	FJ60••WGG	W/HEATER,COOLER		55101-90A44-	1	455	458
	8110-8210	FJ60••WGG	W/FR HEATER	#	55101-90A11- (55101-90A34-)	1	459	466
	8110-8210	FJ60••WGG			55101-90A34-	1	459	466
	8110-8210	FJ60••WGG	W/FR HEATER,COOLER	#	55101-90A43- (55101-90A44-)	1	459	466
	8110-8210	FJ60••WGG	W/COOLER		55101-90A44-	1	459	466
	8008-8110	FJ60••WGV		#	55101-90A12- (55101-90A34-)	1	455	458
	8510-	HJ60••ATM			55016-90A14-	1	567	
	8510-	HJ60••ATM	W/COOLER		55016-90A16-	1	567	

PROD.DATE	MODELS	DESCRIPTION	R/P	PART NUMBER	QTY	REV.REF.CODE FROM	REV.REF.CODE UP TO
	55101 PANEL SUB- CONTINUED	ASSY, DASH					
8510-	HJ60••MTM	W/CLUTCH BOOSTER,COOLER		55016-90A01-	1	567	
8510-	HJ60••MTM			55101-90680-	1	567	
8510-	HJ60••MTM	W/COOLER		55101-90682-	1	567	
8510-	HJ60••MTM	W/CLUTCH BOOSTER		55101-90689-	1	567	
	55210 INSULATOR	ASSY, DASH PANEL					
8411-8504	BJ60			55210-90A09-	1	515	554
8008-8110	BJ60,FJ60	W/O COOLER		55210-90A04-	1	455	458
8110-8210	BJ60,FJ60	W/FR HEATER,W/O COOLER			1	459	466
8210-8411	BJ60,FJ60			55210-90A07-	1	467	514
8504-	BJ60,HJ60,FJ60			55210-90A09-	1	555	
8411-8504	FJ60			55210-90A07-	1	515	554
8008-8110	FJ60••WGG	W/COOLER		35210-90A05-	1	455	458
8110-8210	FJ60••WGG	W/FR HEATER,COOLER			1	459	466
	55223B INSULATOR,	DASH PANEL HEAT, NO.1					
8008-8411	BJ60			55223-90A03-	1	455	514
8411-8510	BJ60			55223-90A04-	1	515	566
8008-	FJ60			55223-90A02-	1	455	
	57161 CROSSMEMBER,	FRONT					
8411-8504	BJ60			57104-90A01-	1	515	554
8008-8411	BJ60,FJ60		#	57104-90A00- (57104-90A01-)	1	455	514
8504-	BJ60,HJ60,FJ60			57104-90A01-	1	555	
8411-8504	FJ60		#	57104-90A00- (57104-90A01-)	1	515	554

FIG.55-51 INSTRUMENT PANEL & GLOVE COMPARTMENT

3-G2

(8008-)

GENUINE TOYOTA PARTS

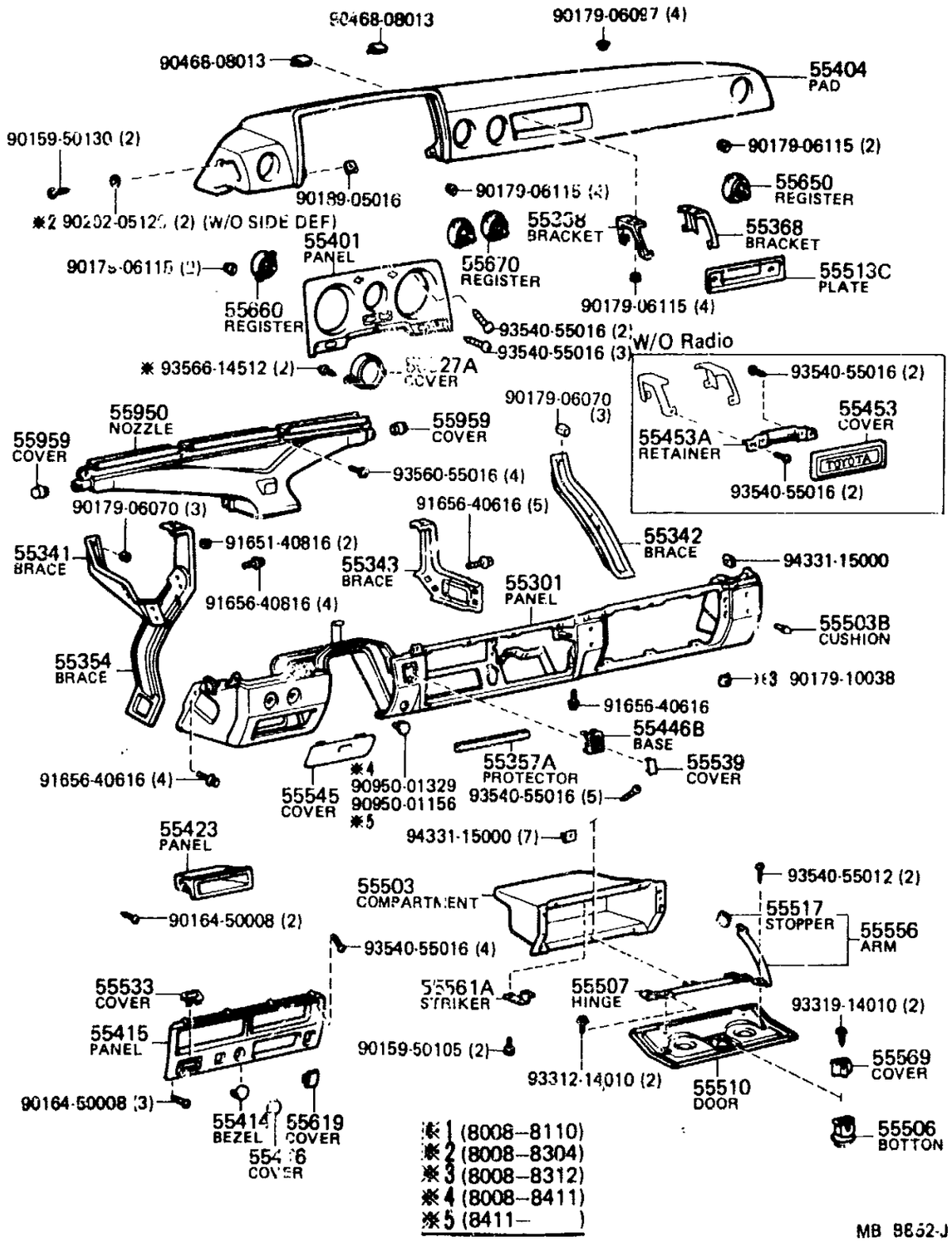

PROD.DATE	MODELS	DESCRIPTION	R/P	PART NUMBER	QTY	REV.REF.CODE FROM	REV.REF.CODE UP TO
FIG.	55-51 INSTRUMENT PANEL & GLOVE COMPARTMENT						
	55301 PANEL SUB-ASSY, INSTRUMENT						
8411-8510	BJ60	GRAY		55301-90A51-03	1	515	566
8411-8510	BJ60	BEIGE		55301-90A51-05	1	515	566
8008-8210	BJ60,FJ60			55301-90A09-	1	455	466
8210-8411	BJ60,FJ60	GRAY		# 55301-90A35-03 (55301-90A55-03) •(55446-90A01-03) •(55524-90A00-) •(55539-32010-01)	1	467	514
8210-8411	BJ60,FJ60	BEIGE		# 55301-90A35-05 (55301-90A55-05) •(55446-90A01-05) •(55539-32010-01)	1	467	514
8411-8504	FJ60	GRAY		# 55301-90A35-03 (55301-90A55-03) •(55446-90A01-03) •(55524-90A00-) •(55539-32010-01)	1	515	554
8411-8504	FJ60	BEIGE		# 55301-90A35-05 (55301-90A55-05) •(55446-90A01-05) •(55539-32010-01)	1	515	554
8504-	FJ60	GRAY		55301-90A55-03	1	555	
8504-	FJ60	BEIGE		55301-90A55-05	1	555	
8510-	HJ60	GRAY		55301-90A63-03	1	567	
C 8510-	HJ60	BEIGE		55301-90A63-05	1	567	
	55341 BRACE, INSTRUMENT PANEL, NO.1						
8008-	BJ60,FJ60			55341-90A02-	1	455	
8510-	HJ60			55341-90A03-	1	567	
	55342 BRACE, INSTRUMENT PANEL, NO.2						
8008-	BJ60,HJ60,FJ60			55342-90A01-	1	455	
	55343 BRACE, INSTRUMENT PANEL, NO.3						
8008-	BJ60,HJ60,FJ60			55344-90A01-	1	455	
	55354 BRACE, INSTRUMENT PANEL TO FLOOR						
8008-	BJ60,FJ60			55351-90A01-	1	455	
8510-	HJ60			55351-90A03-	1	567	

	PROD.DATE	MODELS	DESCRIPTION	R/P	PART NUMBER	QTY	REV.REF.CODE FROM	REV.REF.CODE UP TO
		55357A PROTECTOR, EDGE, NO.1						
	8008-	BJ60,HJ60,FJ60			55357-90A00-	1	455	
		55368 BRACKET, RADIO TUNER MOUNTING						
	8008-	BJ60,HJ60,FJ60	RH		55366-90A00-	1	455	
	8008-	BJ60,HJ60,FJ60	LH		55368-90A00-	1	455	
		55401 PANEL SUB-ASSY, INSTRUMENT CLUSTER FINISH						
	8008-8210	BJ60			55410-90A04-	1	455	466
	8210-8411	BJ60			55410-90A39-	1	467	514
	8411-8510	BJ60	DARK GRAY-M		55410-90A60-03	1	515	566
	8008-8210	FJ60			55410-90A01-	1	455	466
C	8210-	FJ60	DARK GRAY-M		55410-90A29-03	1	467	
C	8510-	HJ60	DARK GRAY-M		55410-90G05-03	1	567	
C	8608-	HJ60	W/DIFF LOCK,DARK GRAY-M		55410-90G13-03	1	601	
		55404 SAFETY PAD SUB-ASSY, INSTRUMENT PANEL, UPPER						
	8411-8504	BJ60	W/SIDE DEFROSTER,SEPIA BROWN		55401-90A03-16	1	515	554
	8008-8411	BJ60,FJ60	W/SIDE DEFROSTER,DARK BROWN		55401-90A03-06	1	455	514
	8210-	BJ60,HJ60,FJ60	W/SIDE DEFROSTER,SHADOW GRAY		55401-90A03-03	1	467	
	8504-	BJ60,HJ60,FJ60	W/SIDE DEFROSTER,SEPIA BROWN		55401-90A03-16	1	555	
	8411-8504	FJ60	W/SIDE DEFROSTER,DARK BROWN		55401-90A03-06	1	515	554
	8504-	FJ60	W/O SIDE DEFROSTER,SEPIA BROWN		55401-90A02-16	1	555	
	8008-8504	FJ60..WGG	W/O SIDE DEFROSTER,DARK BROWN		55401-90A02-06	1	455	554

	PROD.DATE	MODELS	DESCRIPTION	R/P	PART NUMBER	QTY	REV.REF.CODE FROM	REV.REF.CODE UP TO
		55404 SAFETY PAD SUB-ASSY, INSTRUMENT PANEL, UPPER CONTINUED						
	8210-	FJ60..WGG	W/O SIDE DEFROSTER,SHADOW GRAY		55401-90A02-03	1	467	
		55414 BEZEL, CIGAR LIGHTER HOLE						
	8008-	BJ60,FJ60			55477-90A00-	1	455	
	8510-	HJ60			55477-90A01-	1	567	
		55415 PANEL, INSTRUMENT CLUSTER FINISH, CENTER						
	8008-8411	BJ60,FJ60	BEIGE		55412-90A01-05	1	455	514
	8210-8411	BJ60,FJ60	GRAY		55412-90A01-03	1	467	514
	8411-	BJ60,HJ60	BEIGE		55412-90A02-05	1	515	
	8411-	BJ60,HJ60	GRAY		55412-90A02-13	1	515	
	8411-8504	FJ60	GRAY		55412-90A01-03	1	515	554
	8411-	FJ60	BEIGE		55412-90A01-05	1	515	
	8504-	FJ60	GRAY		55412-90A01-13	1	515	
		55423 PANEL, STEREO PLAYER FINISH						
	8008-	BJ60,HJ60,FJ60			55521-90A00-	1	455	
		55446B SPACER, INSTRUMENT PANEL SAFETY PAD, SET						
	8411-8504	BJ60	GRAY		55446-90A01-03	1	515	554
	8411-8504	BJ60	BEIGE		55446-90A01-05	1	515	554
	8411-	BJ60,HJ60	W/FD SW,GRAY		55446-90A02-03	1	515	
	8411-	BJ60,HJ60	W/FD SW,BEIGE		55446-90A02-05	1	515	
C	8504-	BJ60,HJ60,FJ60..MTM	GRAY		55446-90A01-03	1	555	
C	8504-	BJ60,HJ60,FJ60..MTM	BEIGE		55446-90A01-05	1	555	
		55453 COVER, RADIO TUNER OPENING						
	8008-8110	BJ60,FJ60			55522-90A00-	1	455	458
	8110-	FJ60				1	459	
		55453A RETAINER, RADIO TUNER OPENING, NO.1						
	8008-8110	BJ60,FJ60			55417-90A00-	1	455	458

PROD.DATE	MODELS	DESCRIPTION	R/P	PART NUMBER	QTY	REV.REF.CODE FROM	REV.REF.CODE UP TO
	55453A RETAINER, RADIO TUNER OPENING, NO.1 CONTINUED						
8110-	FJ60			55417-90A00-	1	459	
	55476 COVER, CIGARETTE LIGHTER HOLE						
8008-8110	BJ60,FJ60			55477-10010-01	1	455	458
	55503 COMPARTMENT SUB-ASSY, GLOVE						
8008-	BJ60,HJ60,FJ60			55581-90A02-	1	455	
	55503B CUSHION (FOR GLOVE COMPARTMENT)						
8008-	BJ60,HJ60,FJ60			90541-03015-	1	455	
	55506 BUTTON SUB-ASSY, GLOVE COMPARTMENT DOOR LOCK						
8008-8411	BJ60,FJ60			55560-12020-	1	455	514
C 8411-8608	BJ60,HJ60				1	515	600
C 8604-8608	FJ60				1	573	600
	55507 HINGE SUB-ASSY, GLOVE COMPARTMENT DOOR						
8008-	BJ60,HJ60,FJ60			55505-90A00-	1	455	
	55510 DOOR ASSY, GLOVE COMPARTMENT						
8411-8504	BJ60	GRAY		55501-90A00-13	1	515	554
8210-8411	BJ60,FJ60	GRAY		55501-90A00-03	1	467	514
8008-	BJ60,HJ60,FJ60	BEIGE		55501-90A00-05	1	455	
8504-	BJ60,HJ60,FJ60	GRAY		55501-90A00-13	1	555	
8411-8504	FJ60	GRAY		55501-90A00-03	1	515	554
	55513C PLATE, RADIO TUNER FINISH						
8008-	BJ60,HJ60,FJ60			55513-90A00-	1	455	
	55517 STOPPER, GLOVE COMPARTMENT DOOR ARM						
8008-	BJ60,HJ60,FJ60			55517-14010-	1	455	
	55527A COVER, METER OPENING						
8008-8110	BJ60,FJ60..WGV			55527-90A00-	1	455	458

GENUINE TOYOTA PARTS

PROD.DATE	MODELS	DESCRIPTION	R/P	PART NUMBER	QTY	REV.REF.CODE FROM	REV.REF.CODE UP TO
	55533 COVER, AUTO CLOCK HOLE						
8411-	BJ60,HJ60			55533-90A00-	1	515	
	55539 COVER, SPARE SWITCH HOLE						
8411-8504	BJ60			55539-32010-01	1	515	554
C 8504-	BJ60,HJ60,FJ60..MTM				1	555	
	55545 COVER, FUSE BOX OPENING						
8411-8504	BJ60	GRAY		55545-90A00-13	1	515	554
8210-8411	BJ60,FJ60	GRAY		55545-90A00-03	1	467	514
8008-	BJ60,HJ60,FJ60	BEIGE		55545-90A00-05	1	455	
8504-	BJ60,HJ60,FJ60	GRAY		55545-90A00-13	1	555	
8411-8504	FJ60	GRAY		55545-90A00-03	1	515	554
	55556 ARM, GLOVE COMPARTMENT DOOR CHECK						
8008-	BJ60,HJ60,FJ60			55556-90A01-	1	455	
	55561A STRIKER, GLOVE COMPARTMENT DOOR LOCK						
8008-	BJ60,HJ60,FJ60			55561-90A00-	1	455	
	55569 COVER, GLOVE COMPARTMENT DOOR LOCK						
8411-8504	BJ60	GRAY		55569-90A00-13	1	515	554
8210-8411	BJ60,FJ60	GRAY		55569-90A00-03	1	467	514
8008-	BJ60,HJ60,FJ60	BEIGE		55569-90A00-05	1	455	
8504-	BJ60,HJ60,FJ60	GRAY		55569-90A00-13	1	555	
8411-8504	FJ60	GRAY		55569-90A00-03	1	515	554
	55619 COVER, SWITCH HOLE						
8008-	BJ60,HJ60,FJ60			55524-90A00-	8	455	
	55650 REGISTER ASSY, INSTRUMENT PANEL, NO.1						
8008-	BJ60,HJ60,FJ60			55650-90A00-	1	455	
	55660 REGISTER ASSY, INSTRUMENT PANEL, NO.2						
8008-	BJ60,HJ60,FJ60			55650-90A00-	1	455	

PROD.DATE	MODELS	DESCRIPTION	R/P	PART NUMBER	QTY	REV.REF.CODE FROM	REV.REF.CODE UP TO
	55670 REGISTER ASSY, INSTRUMENT PANEL, NO.3						
8008-	BJ60,HJ60,FJ60			55670-90A00-	2	455	
	55950 NOZZLE ASSY, DEFROSTER						
8008-	BJ60,HJ60,FJ60			55950-90A01-	1	455	
	55959 COVER, DEFROSTER NOZZLE OPENING, NO.1						
8008-	FJ60..WGG			55959-14010-	2	455	

PROD.DATE	MODELS	DESCRIPTION	R/P	PART NUMBER	QTY	REV.REF.CODE FROM	REV.REF.CODE UP TO

GENUINE TOYOTA PARTS

(8008-)

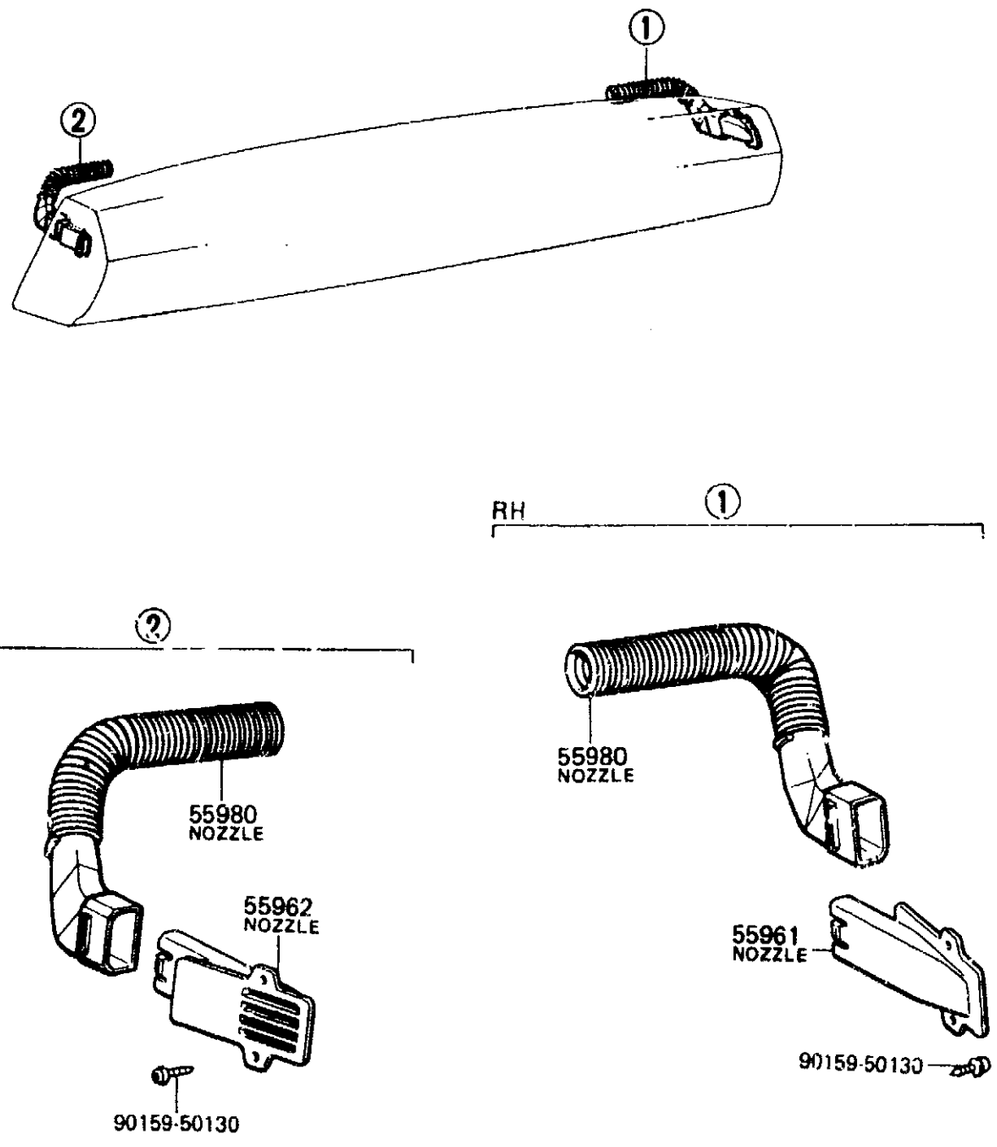

PROD.DATE	MODELS	DESCRIPTION	R/P	PART NUMBER	QTY	REV.REF.CODE FROM	REV.REF.CODE UP TO
FIG.	55-52 FRONT VENTILATOR						
	55961 NOZZLE, SIDE DEFROSTER, RH						
8411-8504	BJ60	SEPIA BROWN		55961-90A00-16	1	515	554
8008-8411	BJ60,FJ60	DARK BROWN		55961-90A00-06	1	455	514
8210-	BJ60,HJ60,FJ60	SHADOW GRAY		55961-90A00-03	1	467	
8504-	BJ60,HJ60,FJ60	SEPIA BROWN		55961-90A00-16	1	555	
8411-8504	FJ60	DARK BROWN		55961-90A00-06	1	515	554
	55962 NOZZLE, SIDE DEFROSTER, LH						
8411-8504	BJ60	SEPIA BROWN		55961-90A00-16	1	515	554
8008-8411	BJ60,FJ60	DARK BROWN		55961-90A00-06	1	455	514
8210-	BJ60,HJ60,FJ60	SHADOW GRAY		55961-90A00-03	1	467	
8504-	BJ60,HJ60,FJ60	SEPIA BROWN		55961-90A00-16	1	555	
8411-8504	FJ60	DARK BROWN		55961-90A00-06	1	515	554
	55980 NOZZLE, SIDE DEFROSTER						
8008-	BJ60,HJ60,FJ60	RH		55970-90A00-	1	455	
8008-	BJ60,HJ60,FJ60	LH		55980-90A00-	1	455	

FIG.55-53 COWL PANEL & WINDSHIELD GLASS

3-L2

MR4-13-0257

(8008-)

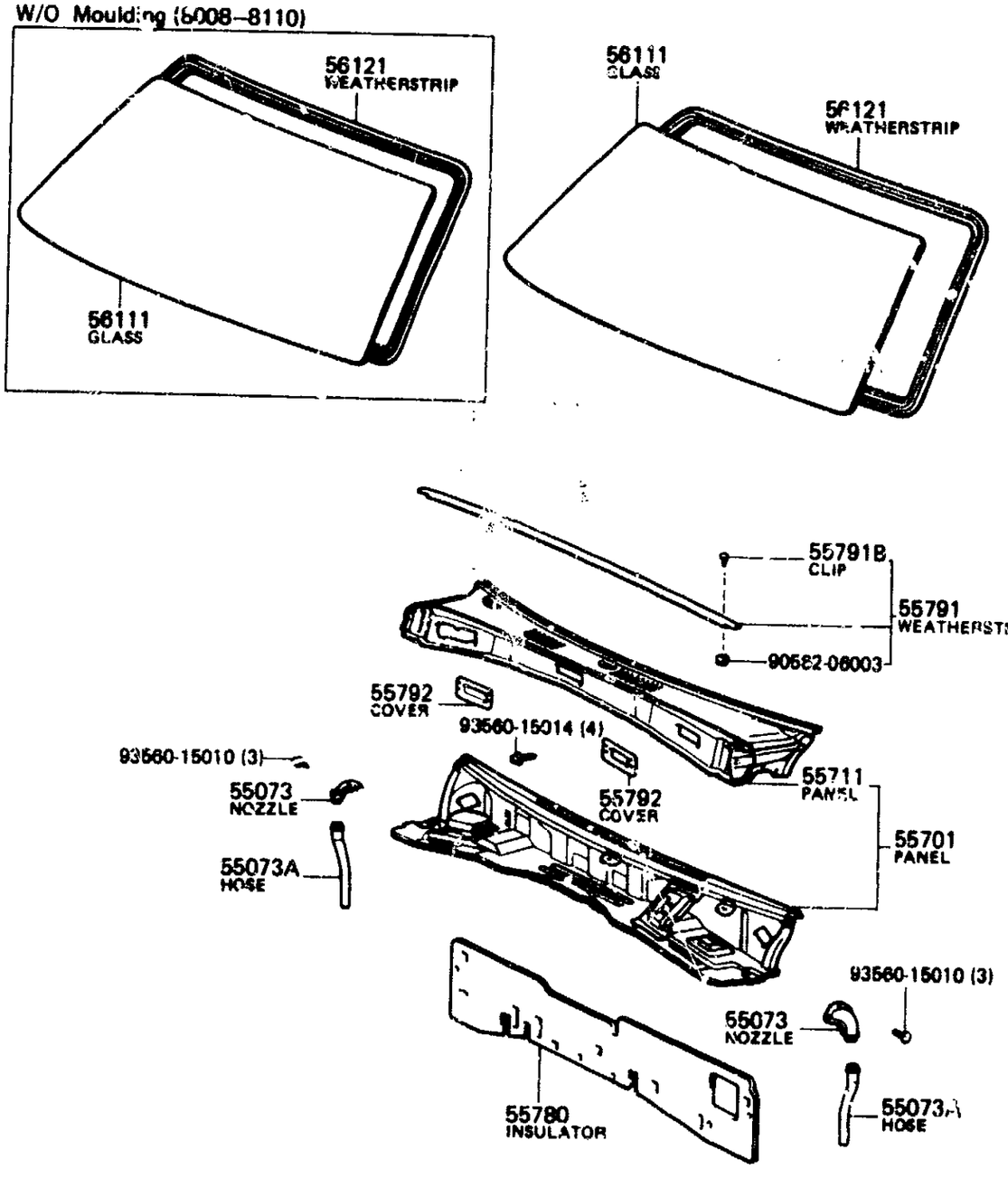

GENUINE TOYOTA PARTS

	PROD.DATE	MODELS	DESCRIPTION	R/P	PART NUMBER	QTY	REV.REF.CODE FROM	REV.REF.CODE UP TO
	FIG.	55-53 COWL PANEL & WINDSHIELD GLASS						
		55073 NOZZLE SUB-ASSY, COWL PANEL WATER EXTRACT						
	8008-	BJ60,HJ60,FJ60			55073-90A00-	2	455	
		55073A HOSE (FOR EXTRACT NOZZLE)						
	8008-	BJ60,HJ60,FJ60			90910-04012-	2	455	
		55701 PANEL SUB-ASSY, COWL						
	8008-8312	BJ60		#	55700-90A09- (55700-90A26-)	1	455	
	8210-8312	BJ60	W/POWER CLUTCH	#	55700-90A19- (55700-90A26-)	1	467	
	8411-8504	BJ60		#	55700-90A41- (55700-90A57-)	1	515	554
	8411-8504	BJ60	W/COOLER	#	55700-90A44- (55700-90A57-)	1	515	554
	8312-8411	BJ60,FJ60			55700-90A26-	1		514
	8411-8601	BJ60,HJ60,FJTM	W/CLUTCH BOOSTER,COOLER	#	55700-90A45- (55700-90A57-)	1	515	
	8504-8601	BJ60,HJ60,FJ60		#	55700-90A41- (55700-90A57-)	1	555	
	8504-8601	BJ60,HJ60,FJ60	W/COOLER	#	55700-90A44- (55700-90A57-)	1	555	
	8008-8312	FJ60	W/COOLER	#	55700-90A05- (55700-90A26-)	1	455	
	8008-8312	FJ60	W/O COOLER	#	55700-90A06- (55700-90A26-)	1	455	
	8411-8504	FJ60			55700-90A26-	1	515	554
C	8601-8604	HJ60,FJ60			55700-90A57-	1		572
C	8604-	HJ60,FJ60			55700-90A88-	1	573	
		55711 PANEL, COWL TOP, OUTER						
	8210-8305	BJ60	W/POWER CLUTCH	#	55701-90A08- (55701-90A11-)	1	467	480
	8008-8312	BJ60		#	55701-90A04- (55701-90A11-)	1	455	
	8305-8312	BJ60	W/POWER CLUTCH	#	55701-90A11- (55701-90A15-)	1	481	
	8312-8601	BJ60,HJ60,FJ60				1		

MB5870D

PROD.DATE	MODELS	DESCRIPTION	R/P	PART NUMBER	QTY	REV.REF.CODE FROM	REV.REF.CODE UP TO
	55711 PANEL, COWL TOP, OUTER						
	CONTINUED						
8008-8312	FJ60		#	55701-90A03- (55701-90A11-)	1	455	
C 8601-8604	HJ60,FJ60			55701-90A15-	1		572
C 8604-	HJ60,FJ60			55701-90A25-	1	573	
	55780 INSULATOR ASSY, COWL TOP						
8008-	BJ60,HJ60,FJ60			55780-90A01-	1	455	
	55791 WEATHERSTRIP, HOOD TO COWL TOP						
8008-	BJ60,HJ60,FJ60			53383-90A00-	1	455	
	55791B CLIP (FOR HOOD TO COWL TOP WEATHERSTRIP)						
8008-	BJ60,HJ60,FJ60			90467-08011-	9	455	
	55792 COVER, WIPER MOTOR SERVICE HOLE						
8411-8504	BJ60			55729-90A00-	2	515	554
8008-8411	BJ60,FJ60			55793-89105-	2	455	514
8504-	BJ60,HJ60,FJ60			55729-90A00-	2	555	
8411-8504	FJ60			55793-89105-	2	515	554
	56111 GLASS, WINDSHIELD						
8008-8110	BJ60,FJ60..WGV	*LAM,T=5.3		56111-90A00-	1	455	458
8110-	BJ60,HJ60,FJ60	*TL,T=5.3		56111-90A02-	1	459	
8008-8110	FJ60..WGG	*TL,T=5.3			1	455	458
	56121 WEATHERSTRIP, WINDSHIELD						
8008-8110	BJ60,FJ60	W/MOULDING	#	56121-90A02- (56121-90A01-)	1	455	458
C 8110-8505	BJ60,FJ60	W/MOULDING			1	459	
8008-8110	BJ60,FJ60..WGV	W/O MOULDING	#	56121-90A03- (56121-90A00-)	1	455	458
8505-	BJ60,HJ60,FJ60	W/MOULDING		56121-90A01-	1		
C 8608-	FJ60	W/O MOULDING		56121-90A00-	1	601	

* LAM = Laminated
* TL = Tinted Laminated

MR4-13-0258

GENUINE TOYOTA PARTS

FIG.57-51 FLOOR MEMBER

(8008-)

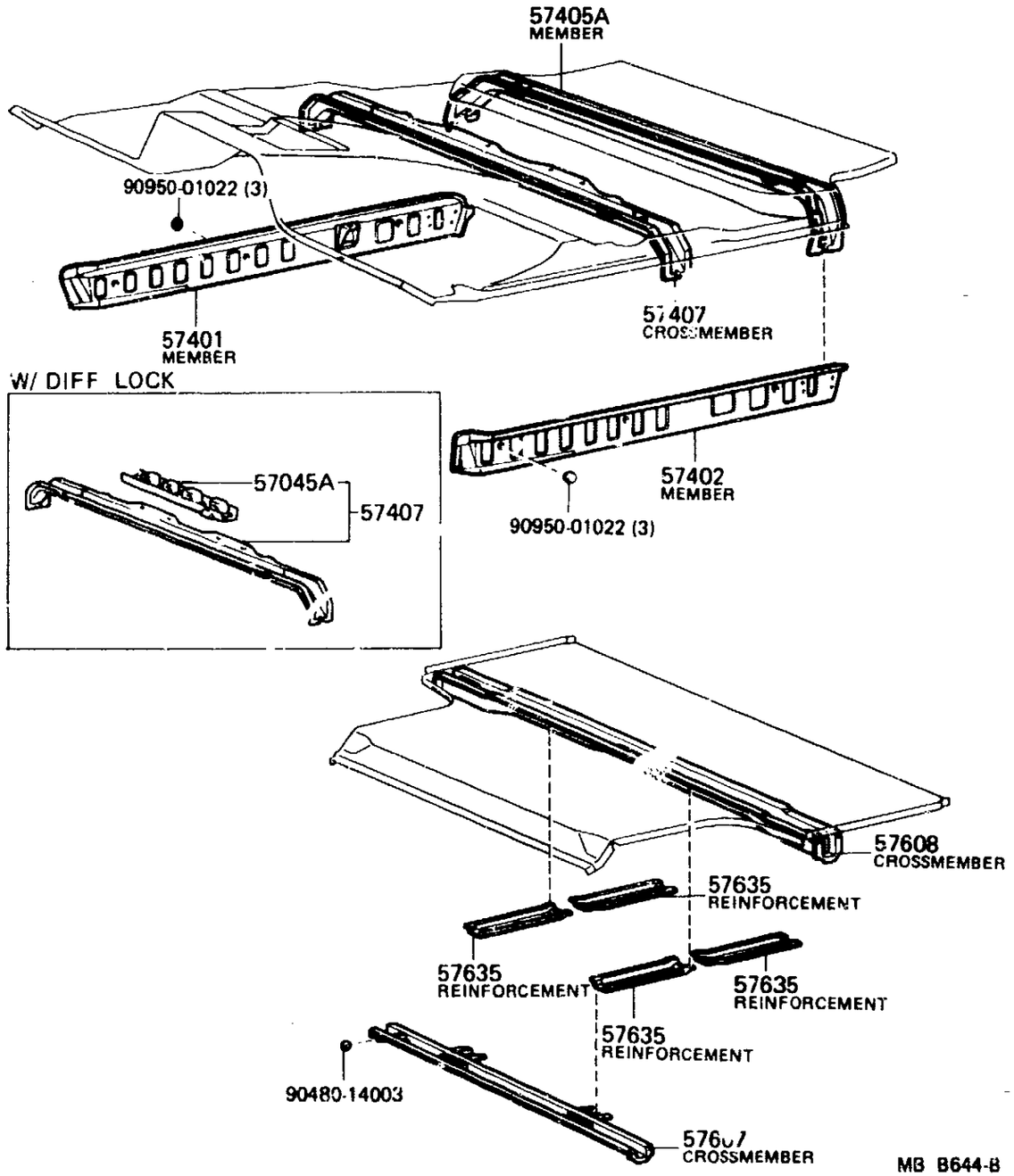

MB B644-B

	PROD.DATE	MODELS	DESCRIPTION	R/P	PART NUMBER	QTY	REV.REF.CODE FROM	REV.REF.CODE UP TO
	FIG.	57-51 FLOOR MEMBER						
		57045A REINFORCEMENT SUB-ASSY, DIFFERENTIAL LOCK LEVER SUPPORT						
C	8608-	HJ60			57045-90A01-	1	601	
		57401 MEMBER SUB-ASSY, MAIN FLOOR SIDE, RH						
	8008-8309	BJ60,FJ60			57401-90A01-	1	455	486
	8309-	BJ60,HJ60,FJ60			57401-90A05-	1	487	
		57402 MEMBER SUB-ASSY, MAIN FLOOR SIDE, LH						
	8008-8309	BJ60,FJ60			57402-90A01-	1	455	486
	8309-	BJ60,HJ60,FJ60			57402-90A05-	1	487	
		57405A MEMBER SUB-ASSY, CENTER FLOOR CROSS, NO.2						
	8008-8309	BJ60,FJ60		#	57405-90A00- (57405-90A03-)	1	455	486
	8309-	BJ60,HJ60,FJ60			57405-90A03-	1	487	
		57407 CROSSMEMBER SUB-ASSY, CENTER FLOOR, NO.1						
	8008-8110	BJ60,FJ60	SEPARATE SEAT,W/HEATER	#	57407-90A03- (57407-90A08-)	1	455	458
	8008-8110	BJ60,FJ60	BENCH SEAT,W/HEATER	#	57407-90A04- (57407-90A09-)	1	455	458
	8110-8309	BJ60,FJ60	W/HEATER	#	57407-90A03- (57407-90A08-)	1	459	486
C	8309-8604	BJ60,HJ60,FJ60			57407-90A09-	1	487	572
C	8604-	FJ60				1	573	
C	8604-	FJ60	W/RR HEATER		57407-90A24-	1	573	
	8008-8110	FJ60••WGG	SEPARATE SEAT	#	57407-90A00- (57407-90A09-)	1	455	458
	8008-8110	FJ60••WGG	BENCH SEAT	#	57407-90A01- (57407-90A08-)	1	455	458
	8110-8309	FJ60••WGG	W/O RR HEATER			1	459	486
	8309-8502	FJ60••WGG	W/O RR HEATER	#	57407-90A06- (57407-90A09-)	1	487	
C	8604-	HJ60			57407-90A09-	1	573	
C	8608-	HJ60	W/*DL		57407-90A21-	1		

*DL = Differential Lock

FIG.57-51 **GENUINE TOYOTA PARTS** 3-B3 **GENUINE TOYOTA PARTS**

PROD.DATE	MODELS	DESCRIPTION	R/P	PART NUMBER	QTY	RCV.REF.CODE FROM	RCV.REF.CODE UP TO
	57607 CROSSMEMBER SUB-ASSY, REAR FLOOR, NO.1						
8008-	BJ60,HJ60,FJ60			57605-90A01-	1	455	
	57608 CROSSMEMBER SUB-ASSY, REAR FLOOR, NO.2						
8411-8504	BJ60			57606-90A03-	1	515	554
8008-8411	BJ60,FJ60			57606-90A00-	1	455	514
8504-	BJ60,HJ60,FJ60			57606-90A03-	1	555	
8411-8504	FJ60			57606-90A00-	1	515	554
	57635 REINFORCEMENT, REAR FLOOR SIDE MEMBER						
8008-8305	BJ60,FJ60			57635-90A00-	4	455	480
8305-	BJ60,HJ60,FJ60			57635-90A02-	4	481	

PROD.DATE	MODELS	DESCRIPTION	R/P	PART NUMBER	QTY	REV.REF.CODE FROM	REV.REF.CODE UP TO

FIG.58-51 FRONT FLOOR PANEL & FRONT FLOOR MEMBER

3-C3

MR4-11-0465

(8008-8510); (8510-8604)FJ60

(8510-8604)HJ60; (8604-)

ILLUST.NO. 1OF2

ILLUST.NO. 1OF2

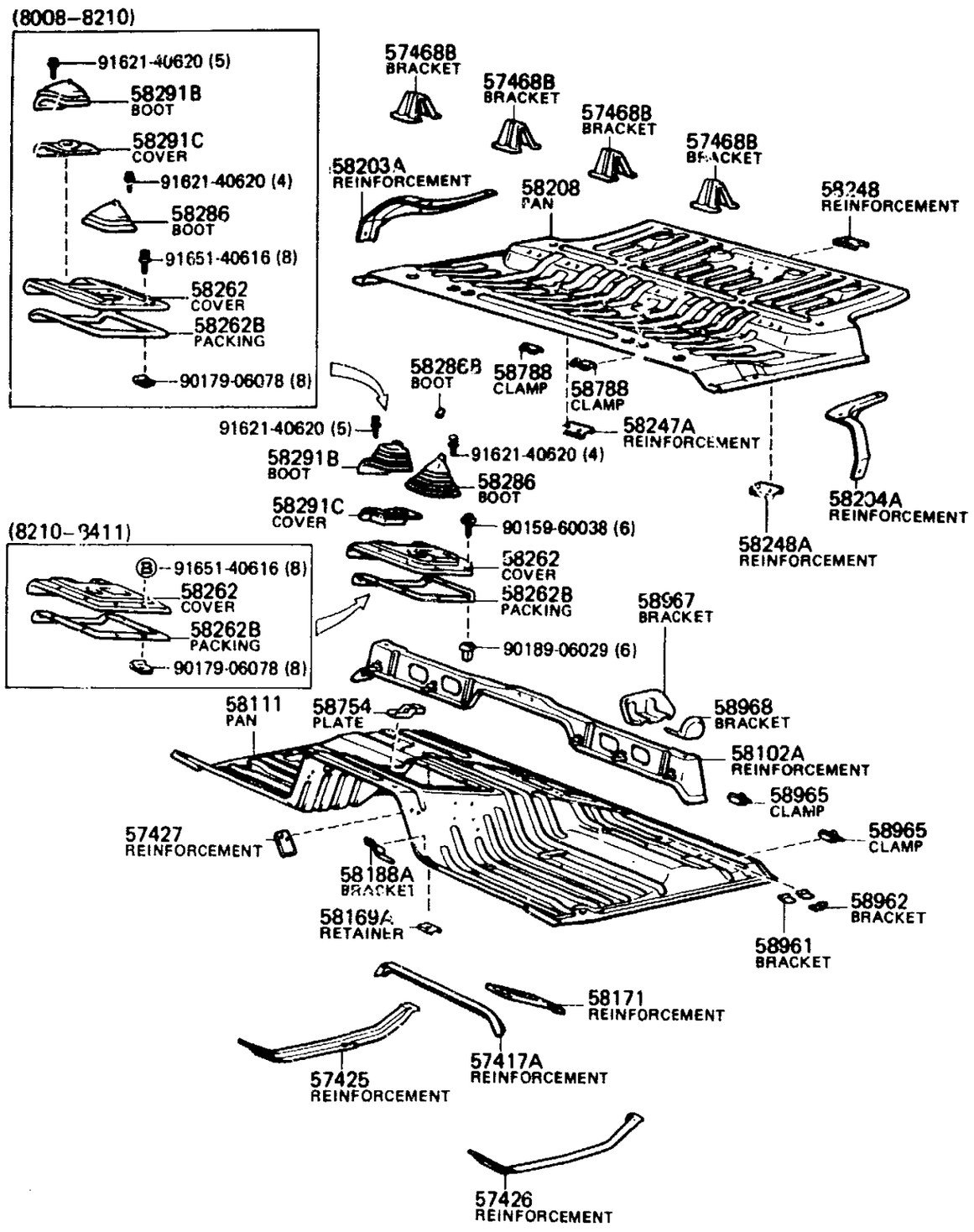

MB B731-F

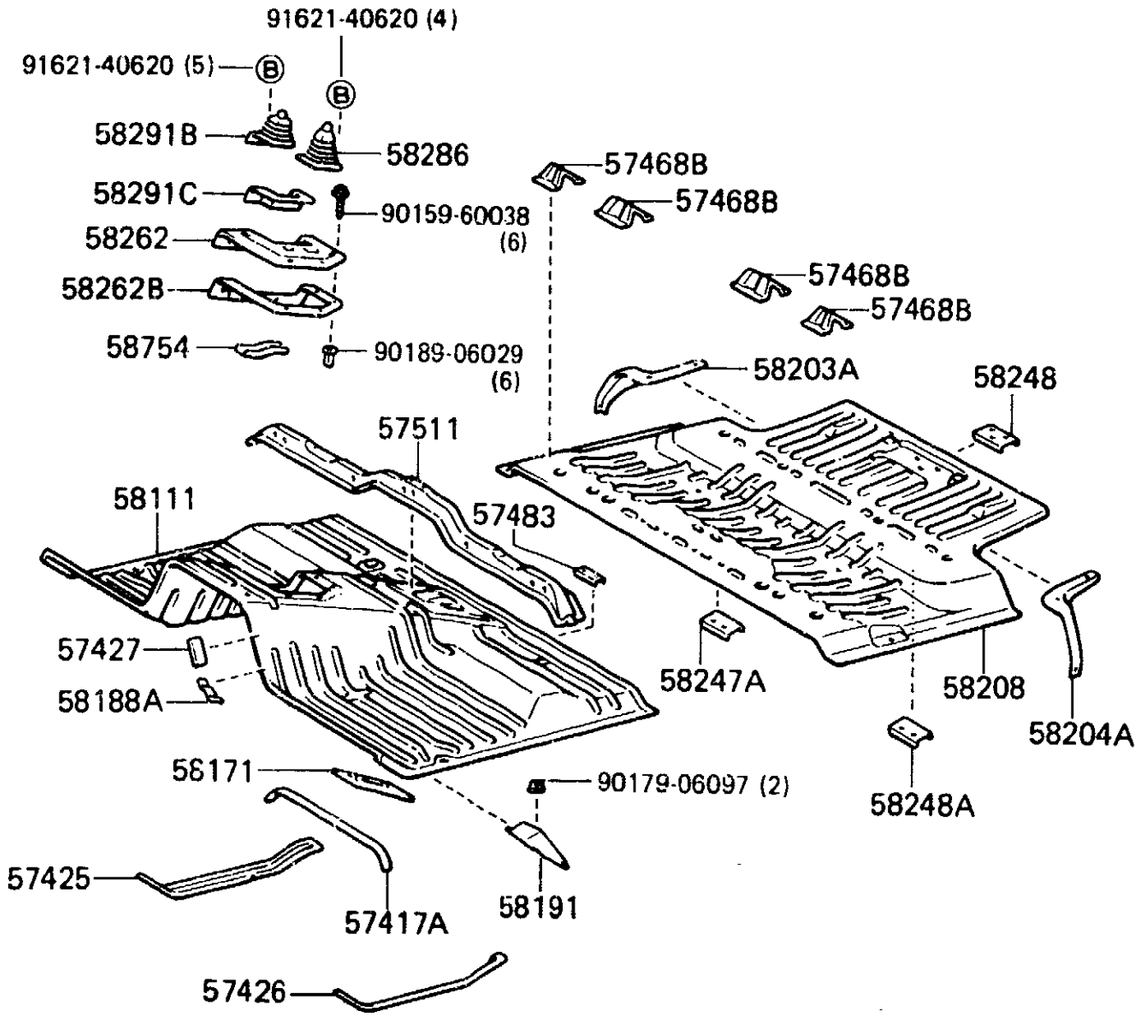

MB K247-B

FIG.58-51 FRONT FLOOR PANEL & FRONT FLOOR MEMBER

3-D3

(8008-)

ILLUST.NO. 20F2

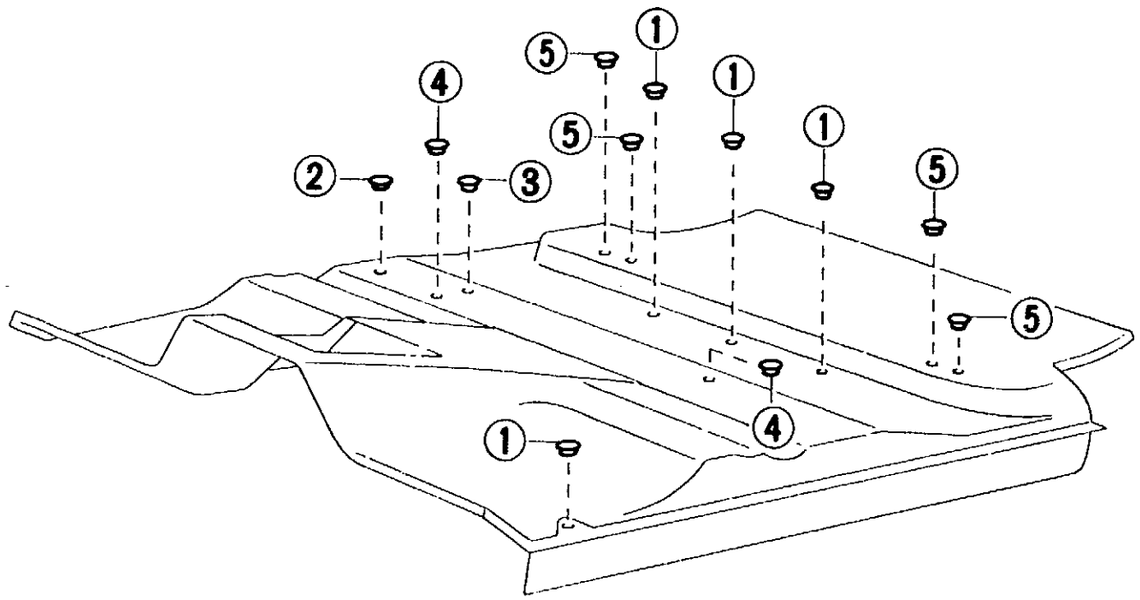

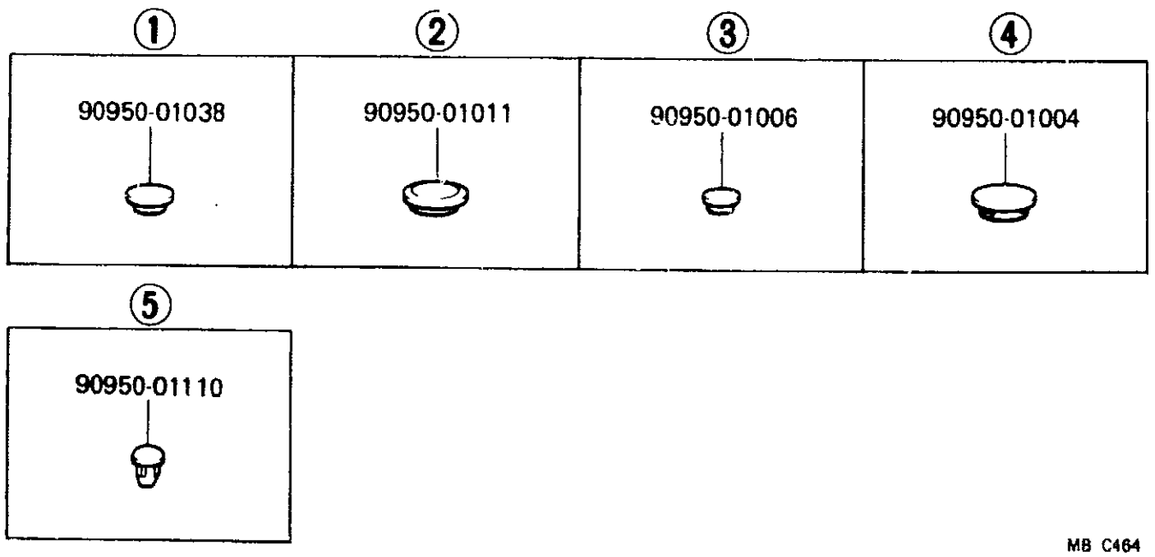

MB C464

GENUINE TOYOTA PARTS

	PROD.DATE	MODELS	DESCRIPTION	R/P	PART NUMBER	QTY	REV.REF.CODE FROM	REV.REF.CODE UP TO
	FIG.	58-51 FRONT FLOOR PANEL & FRONT FLOOR MEMBER						
		57417A REINFORCEMENT, FRONT FLOOR UNDER						
	8008-	BJ60,FJ60			57417-90A00-	1	455	
C	8510-8608	HJ60..ATM			57505-90A00-	1	567	
C	8608-	HJ60..ATM			57505-90A02-	1		
C	8510-	HJ60..MTM			57417-90A00-	1	567	
		57425 REINFORCEMENT, FRONT FLOOR, NO.2 RH						
	8411-8504	BJ60			57425-90A02-	1	515	554
	8008-8411	BJ60,FJ60			57425-90A00-	1	455	514
C	8504-8608	BJ60,HJ60,FJ60			57425-90A02-	1	555	
	8411-8504	FJ60			57425-90A00-	1	515	554
C	8608-	HJ60,FJ60			57506-90A00-	1		
		57426 REINFORCEMENT, FRONT FLOOR, NO.2 LH						
	8411-8504	BJ60			57426-90A01-	1	515	554
	8008-8411	BJ60,FJ60			57426-90A00-	1	455	514
C	8504-8608	BJ60,HJ60,FJ60			57426-90A01-	1	555	
	8411-8504	FJ60			57426-90A00-	1	515	554
C	8608-	HJ60,FJ60			57507-90A00-	1		
		57427 REINFORCEMENT, FRONT FLOOR TO BRACE						
	8008-	BJ60,HJ60,FJ60			57427-90A00-	1	455	
		57468B BRACKET, FRONT SEAT, REAR						
C	8008-8604	BJ60,FJ60			57468-90A00-	4	455	572
C	8604-	FJ60	OUTER		57468-90A01-	2	573	
C	8604-	FJ60	INNER		57468-90A02-	2	573	
	8510-	HJ60	OUTER		57468-90A01-	2	567	
	8510-	HJ60	INNER		57468-90A02-	2	567	
		57483 RETAINER, DIFFERENTIAL LOCK LEVER SUPPORT						
	8510-	HJ60			57483-90A00-	2	567	

	PROD.DATE	MODELS	DESCRIPTION	R/P	PART NUMBER	QTY	REV.REF.CODE FROM	REV.REF.CODE UP TO
		57511 REINFORCEMENT, FRONT FLOOR, CENTER						
C	8604-	FJ60			57511-90A03-	1	573	
C	8608-	HJ60				1	601	
C	8510-8608	HJ60..MTM				1	567	600
		58102A REINFORCEMENT SUB-ASSY, FRONT FLOOR						
	8411-8504	BJ60			58102-90A02-	1	515	554
	8008-8411	BJ60,FJ60			58102-90A00-	1	455	514
C	8504-8604	BJ60,FJ60			58102-90A02-	1	555	572
	8411-8504	FJ60			58102-90A00-	1	515	554
		58111 PAN, FRONT FLOOR						
	8110-8210	BJ60			# 58111-90A04- (58111-90A00-)	1	459	466
	8210-8411	BJ60			# 58111-90A13- (58111-90A10-)	1	467	514
	8411-8510	BJ60			58111-90A21-	1	515	566
	8504-	BJ60,FJ60			58111-90A40-	1	555	
	8008-8110	BJ60,FJ60..WGV			# 58111-90A04- (58111-90A00-)	1	455	458
	8210-8411	FJ60	W/FR HEATER		58111-90A11-	1	467	514
	8210-8411	FJ60			# 58111-90A14- (58111-90A11-)	1	467	514
	8411-8504	FJ60			58111-90A11-	1	515	554
	8008-8110	FJ60..WGG	W/HEATER		# 58111-90A01- (58111-90A02-)	1	455	458
	8008-8110	FJ60..WGG	W/O HEATER		58111-90A02-	1	455	458
	8110-8210	FJ60..WGG	W/O HEATER		# 58111-90A01- (58111-90A02-)	1	459	466
	8110-8210	FJ60..WGG	W/FR HEATER		58111-90A02-	1	459	466
	8510-	HJ60..ATM			58111-90A25-	1	567	
	8510-	HJ60..MTM			58111-90A21-	1	567	
		58169A RETAINER, REAR HEATER MOUNTING						
	8008-	BJ60,FJ60			58169-90A00-	2	455	

	PROD.DATE	MODELS	DESCRIPTION	R/P	PART NUMBER	QTY	REV.REF.CODE FROM	REV.REF.CODE UP TO
		58171 REINFORCEMENT, PARKING BRAKE BASE						
	8008-	BJ60,HJ60,FJ60			58107-90A00-	1	455	
		58188A BRACKET, ACCELERATOR PEDAL STOPPER						
	8411-8504	BJ60			58188-90A03-	1	515	554
	8008-8411	BJ60,FJ60			58188-90A01-	1	455	514
C	8504-8604	BJ60,FJ60				1	555	572
	8411-8504	FJ60				1	515	554
C	8604-	FJ60			58188-90A03-	1	573	
	8510-	HJ60..ATM			58188-90A01-	1	567	
	8510-	HJ60..MTM			58188-90A03-	1	567	
		58191 FOOTREST, FRONT FLOOR						
C	8510-	HJ60..ATM			58192-90A00-	1	567	
		58203A REINFORCEMENT SUB-ASSY, CENTER FLOOR PANEL, RH						
	8008-	BJ60,HJ60,FJ60			58203-90A00-	1	455	
		58204A REINFORCEMENT SUB-ASSY, CENTER FLOOR PANEL, LH						
	8008-	BJ60,HJ60,FJ60			58204-90A00-	1	455	
		58208 PAN, CENTER FLOOR						
	8008-8305	BJ60,FJ60			# 58211-90A00- (58211-90A02-) (58345-90A00-)	1	455	480
C	8305-8604	BJ60,FJ60			58211-90A02-	1	481	572
C	8604-	FJ60			58211-90A07-	1	573	
	8510-	HJ60			58211-90A12-	1	567	
C	8608-	HJ60	W/DIFF LOCK		58211-90A14-	1	601	
		58247A REINFORCEMENT, REAR SEAT CUSHION HINGE, RH						
	8008-	BJ60,HJ60,FJ60			58247-90A00-	1	455	
		58248 REINFORCEMENT, REAR SEAT CUSHION LOCK						
	8008-	BJ60,HJ60,FJ60			58248-90A00-	1	455	

GENUINE TOYOTA PARTS

	PROD.DATE	MODELS	DESCRIPTION	R/P	PART NUMBER	QTY	REV.REF.CODE FROM	REV.REF.CODE UP TO
		58248A REINFORCEMENT, REAR SEAT CUSHION HINGE, LH						
	8008-	BJ60,HJ60,FJ60			58247-90A00-	1	455	
		58262 COVER, TRANSMISSION						
	8411-8504	BJ60			58261-90A03-	1	515	554
	8008-8010	BJ60,FJ60			# 58261-90A00- (58261-90A01-) •(58268-90A01-) •(58290-90A01-)	1	455	
	8010-8210	BJ60,FJ60			58261-90A01-	1		466
	8210-8411	BJ60,FJ60			58261-90A02-	1	467	514
C	8504-	BJ60,HJ60,FJ60••MTM			58261-90A03-	1	555	
	8411-8504	FJ60			58261-90A02-	1	515	554
C	8510-	HJ60••ATM			58261-90A04-	1	567	
		58262B PACKING, TRANSMISSION COVER						
	8411-8504	BJ60			58263-90A02-	1	515	554
	8008-8210	BJ60,FJ60			58263-90A00-	1	455	466
	8210-8411	BJ60,FJ60			58263-90A01-	1	467	514
	8504-	BJ60,HJ60,FJ60			58263-90A02-	1	555	
	8411-8504	FJ60			58263-90A01-	1	515	554
		58286 BOOT, SHIFT AND SELECT LEVER						
	8210-8404	BJ60			58280-90A01-	1	467	
	8411-8504	BJ60			58280-90A03-	1	515	554
	8008-8210	BJ60,FJ60			58280-90A00-	1	455	466
	8404-8411	BJ60,FJ60			58280-90A02-	1		514
	8504-	BJ60,HJ60,FJ60			58280-90A03-	1	555	
	8210-8404	FJ60			58280-90A02-	1	467	
	8411-8504	FJ60				1	515	554
		58286B BOOT, SHIFT LEVER, NO.1						
	8110-8210	BJ60,FJ60			58289-90A00-	1	459	466
	8008-8110	FJ60••WGG				1	455	458

GENUINE TOYOTA PARTS

	PROD.DATE	MODELS	DESCRIPTION	R/P	PART NUMBER	QTY	REV.REF.CODE FROM	REV.REF.CODE UP TO
		58291B BOOT, TRANSFER SHIFT LEVER						
	8411-8504	BJ60			58290-90A03-	1	515	554
	8008-8010	BJ60,FJ60			# 58290-90A00- (58290-90A01-) •(58261-90A01-) •(58268-90A01-)	1	455	
	8010-8210	BJ60,FJ60			58290-90A01-	1		466
	8210-8411	BJ60,FJ60			58290-90A02-	1	467	514
C	8504-8608	BJ60,HJ60,FJ60••MTM			58290-90A03-	1	555	600
	8411-8504	FJ60			58290-90A02-	1	515	554
C	8608-	FJ60			58290-90A03-	1	601	
C	8510-	HJ60	W/*ELC		58290-90A04-	1	567	
		58291C COVER, TRANSFER SHIFT LEVER BOOT						
	8210-8411	BJ60			58268-90A02-	1	467	514
	8411-8504	BJ60			58268-90A04-	1	515	554
	8008-8010	BJ60,FJ60			# 58268-90A00- (58268-90A01-) •(58261-90A01-) •(58290-90A01-)	1	455	
	8010-8210	BJ60,FJ60			58268-90A01-	1		466
	8504-	BJ60,HJ60,FJ60			58268-90A04-	1	555	
	8210-8504	FJ60			58268-90A03-	1	467	554
		58754 PLATE, ENGINE SERVICE COVER CATCH						
	8411-8504	BJ60			58754-90A00-	1	515	554
	8504-	BJ60,HJ60,FJ60				1	555	
		58783 BRACKET, JACK HANDLE SUPPORT						
C	8008-8604	BJ60,FJ60			58706-90A00-	2	455	572
		58961 BRACKET, TOOL BAG, SET BAND, NO.1						
C	8008-8604	BJ60,FJ60			74732-90A00-	2	455	572
		58962 BRACKET, TOOL BAG, SET BAND, NO.2						
C	8008-8604	BJ60,FJ60			58785-90A00-	1	455	572

* ELC = Electric Control Transfer

GENUINE TOYOTA PARTS

	PROD.DATE	MODELS	DESCRIPTION	R/P	PART NUMBER	QTY	REV.REF.CODE FROM	REV.REF.CODE UP TO
		58965	CLAMP, JACK HANDLE					
C	8008-8604	BJ60,FJ60			58706-90A00-	2	455	572
		58967	BRACKET, JACK SUPPORT, NO.1					
C	8008-8604	BJ60,FJ60			58967-90A00-	1	455	572
		58968	BRACKET, JACK SUPPORT, NO.2					
C	8008-8604	BJ60,FJ60			58968-90A00-	1	455	572

FIG.58-52 REAR FLOOR PANEL & REAR FLOOR MEMBER 3-H3

(8008-)

ILLUST.NO. 10F2

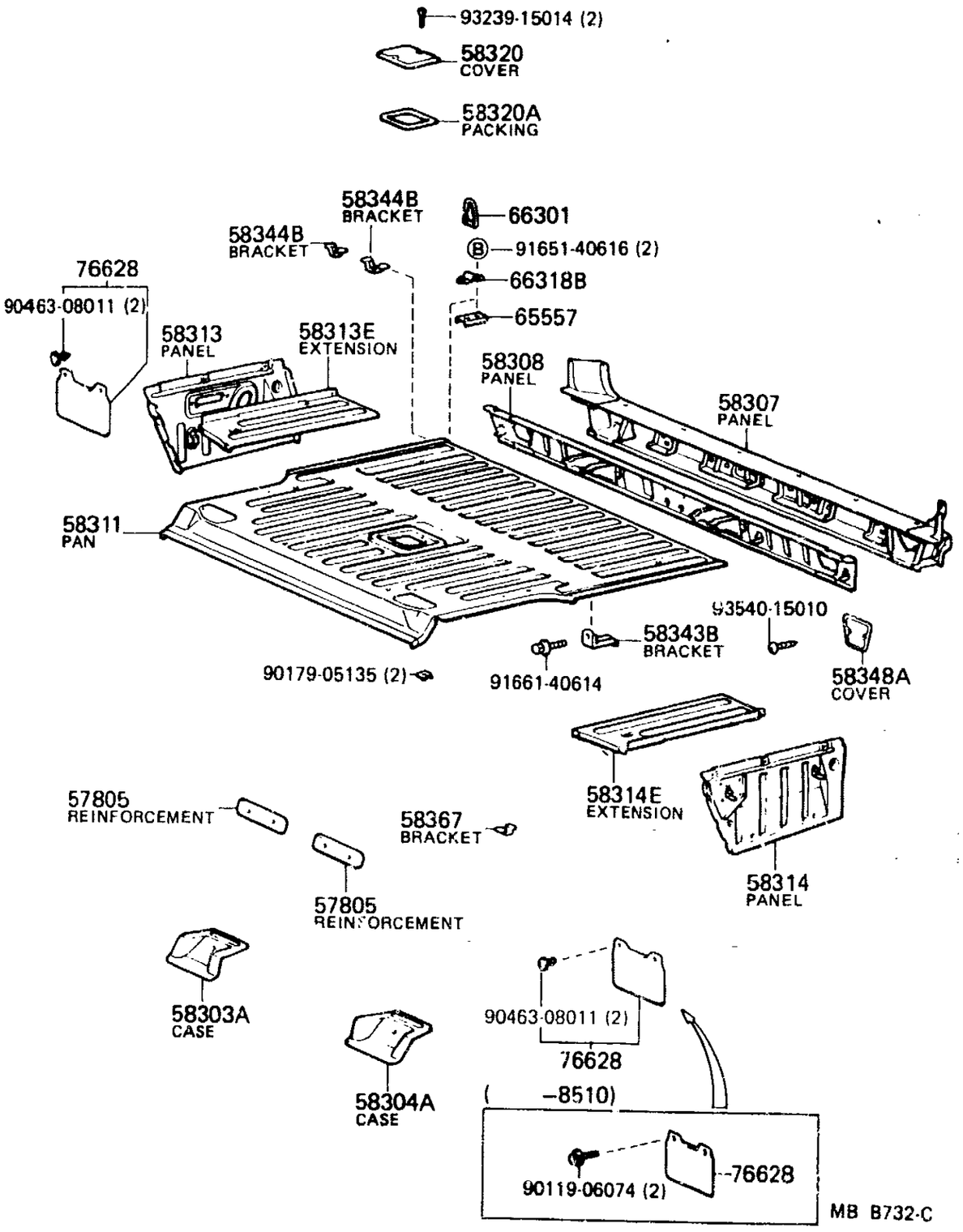

(8008-)

ILLUST.NO. 20F2

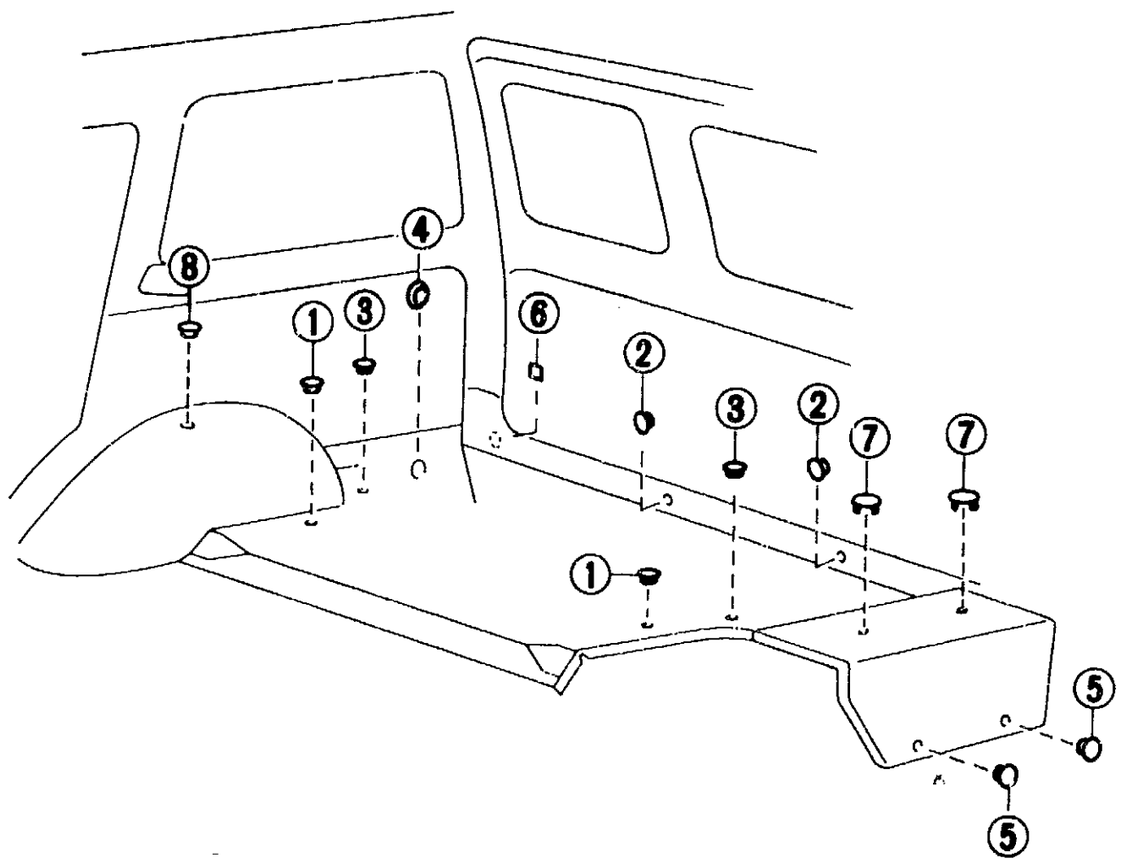

①	②	③	④
90950-01006	90950-01004	90950-01022	90480-92002
⑤	⑥	⑦	⑧
90950-01056	90950-06003	90950-01447	90950-01027

MB C465-C

	PROD.DATE	MODELS	DESCRIPTION	R/P	PART NUMBER	QTY	REV.REF.CODE FROM	REV.REF.CODE UP TO
	FIG.	58-52 REAR FLOOR PANEL & REAR FLOOR MEMBER						
		57805 REINFORCEMENT SUB-ASSY, BELT ANCHOR						
	8008-	BJ60,HJ60,FJ60			57805-90A00-	2	455	
		58303A CASE SUB-ASSY, REAR FLOOR PAN RETRACTOR, RH						
	8008-	BJ60,HJ60,FJ60			58303-90A00-	1	455	
		58304A CASE SUB-ASSY, REAR FLOOR PAN RETRACTOR, LH						
	8008-	BJ60,HJ60,FJ60			58304-90A00-	1	455	
		58307 PANEL SUB-ASSY, BODY LOWER BACK						
	8008-	BJ60,HJ60,FJ60			58307-90A00-	1	455	
		58308 PANEL SUB-ASSY, BODY LOWER BACK, INNER						
C	8008-8604	BJ60,FJ60			58308-90A01-	1	455	572
C	8604-	FJ60			58308-90A02-	1	573	
C	8510-	HJ60				1	567	
		58311 PAN, REAR FLOOR						
	8008-8305	BJ60,FJ60			# 58311-90A01- (58311-90A05-) •(57635-90A01-)	1	455	480
	8305-	BJ60,FJ60			58311-90A05-	1	481	
C	8510-	HJ60				1	567	
		58313 PANEL, REAR FLOOR SIDE, RH						
	8509-8510	BJ60			58305-90A01-	1		566
	8103-8509	BJ60,FJ60				1		
	8008-8110	BJ60,FJ60••WGV				1	455	458
	8509-	HJ60,FJ60			58305-90A08-	1		
		58313E EXTENSION, REAR FLOOR SIDE PANEL, RH						
	8008-	BJ60,HJ60,FJ60			58315-90A00-	1	455	
		58314 PANEL, REAR FLOOR SIDE, LH						
	8509-8510	BJ60			58306-90A00-	1		566
	8008-8509	BJ60,FJ60				1	455	

	PROD.DATE	MODELS	DESCRIPTION	R/P	PART NUMBER	QTY	REV.REF.CODE FROM	REV.REF.CODE UP TO
		58314 PANEL, REAR FLOOR SIDE, LH CONTINUED						
C	8509-8604	FJ60			58306-90A08-	1		572
C	8604-	FJ60			58306-90A04-	1	573	
C	8510-	HJ60				1	567	
		58314E EXTENSION, REAR FLOOR SIDE PANEL, LH						
C	8008-8510	BJ60,FJ60			58316-90A00-	1	455	572
C	8510-	HJ60,FJ60			58316-90A04-	1	567	
		58320 COVER, REAR FLOOR SERVICE HOLE						
	8008-	BJ60,HJ60,FJ60			58325-90A00-	1	455	
		58320A PACKING, REAR FLOOR SERVICE HOLE						
	8008-	BJ60,HJ60,FJ60			58339-90A00-	1	455	
		58343B BRACKET, FUEL HOSE PROTECTOR, FRONT						
	8008-	BJ60,HJ60,FJ60			58343-90A01-	1	455	
		58344B BRACKET, FUEL HOSE PROTECTOR, REAR						
	8411-8504	BJ60	LH		58344-90A01-	1	515	554
	8008-8411	BJ60,FJ60	LH		58344-90A00-	1	455	514
	8008-	BJ60,HJ60,FJ60	RH		58131-90A00-	1	455	
	8504-	BJ60,HJ60,FJ60	LH		58344-90A01-	1	555	
	8411-8504	FJ60	LH		58344-90A00-	1	515	554
		58348A COVER, REAR BODY MOUNTING SERVICE HOLE						
	8008-	BJ60,HJ60,FJ60			58348-90A00-	2	455	
		58367 BRACKET, FUEL TUBE CLAMP						
	8008-	BJ60,HJ60,FJ60			58367-90A00-	1	455	
		65557 RETAINER, ROPE HOOK						
C	8510-	HJ60			65557-90A01-	4	567	
		66301 HOOK SUB-ASSY, ROPE						
C	8510-	HJ60			66301-90A00-	1	567	

GENUINE TOYOTA PARTS

	PROD.DATE	MODELS	DESCRIPTION	R/P	PART NUMBER	QTY	REV.REF.CODE FROM	REV.REF.CODE UP TO
		66318B	BAND, ROPE HOOK					
C	8510-	HJ60			66318-90A00-	1	567	
		76628	MUDGUARD, QUARTER PANEL, REAR					
C	8008-8510	BJ60,FJ60			76628-90A00-	2	455	566
C	8510-	HJ60,FJ60			76628-90A01-	2	567	

GENUINE TOYOTA PARTS

PROD.DATE	MODELS	DESCRIPTION	R/P	PART NUMBER	QTY	REV.REF.CODE FROM	REV.REF.CODE UP TO

(8008-)

WGV
(8008-8110)

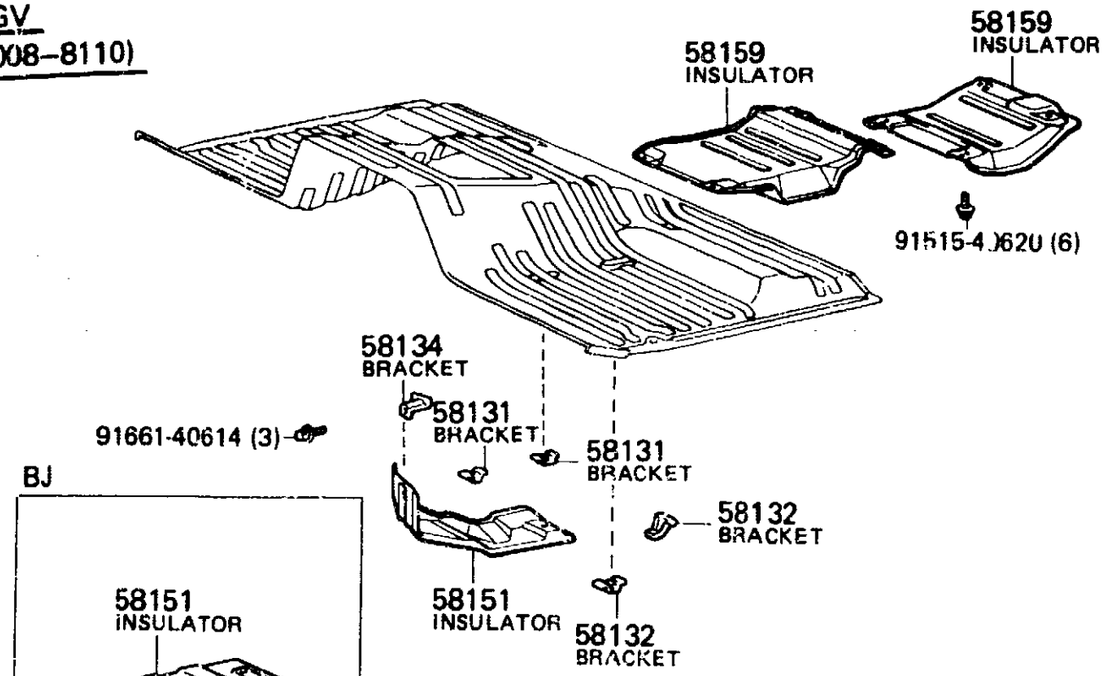

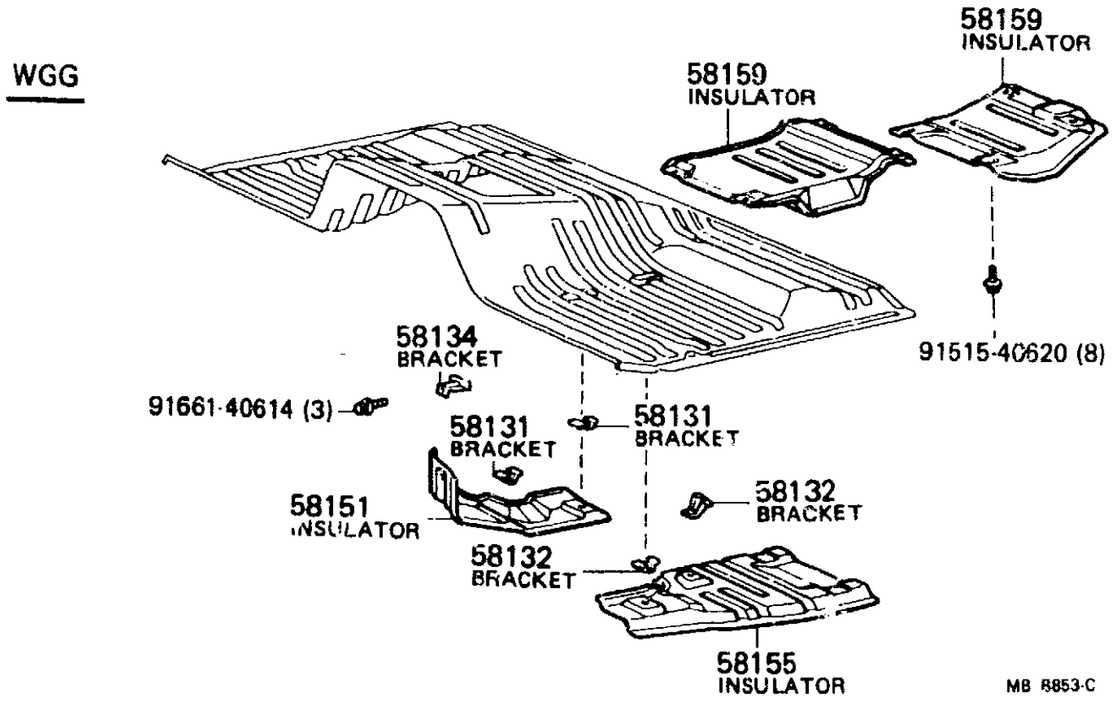

GENUINE TOYOTA PARTS

	PROD.DATE	MODELS	DESCRIPTION	R/P	PART NUMBER	QTY	REV.REF.CODE FROM	REV.REF.CODE UP TO
	FIG.	58-53 FLOOR INSULATOR						
		58131	BRACKET, FRONT FLOOR HEAT INSULATOR, NO.1					
	8008-8510	BJ60			58131-90A00-	2	455	566
	8008-	HJ60,FJ60			58231-90A00-	1	455	
		58132	BRACKET, FRONT FLOOR HEAT INSULATOR, NO.2					
	8008-8411	BJ60		FR	58131-90A00-	1	455	514
	8008-8411	BJ60		RR	58132-90A00-	1	455	514
	8008-	FJ60..WGG		FR	58131-90A00-	1	455	
	8008-	FJ60..WGG		RR	58132-90A00-	1	455	
		58134	BRACKET, CENTER FLOOR HEAT INSULATOR, NO.1					
	8411-8504	BJ60		RH	58345-90A00-	1	515	554
	8008-8411	BJ60,FJ60		RH	58131-90A00-	1	455	514
	8008-	BJ60,FJ60		LH	58232-90A00-	1	455	
	8504-	BJ60,FJ60		RH	58345-90A00-	1	555	
	8411-8504	FJ60		RH	58131-90A00-	1	515	554
	8510-	HJ60		LH	58232-90A00-	1	567	
	8510-	HJ60		RH	58345-90A00-	1	567	
		58151	INSULATOR, FRONT FLOOR HEAT, NO.1					
	8008-8510	BJ60			58153-90A00-	1	455	566
	8008-	HJ60,FJ60			58155-90A00-	1	455	
		58155	INSULATOR, FRONT FLOOR HEAT, NO.3					
C	8210-8604	FJ60			58151-90A01-	1	467	572
C	8604-	FJ60			58151-90A03-	1	573	
	8008-8210	FJ60..WGG			58151-90A00-	1	455	466
		58159	INSULATOR, MAIN MAFFLAR HEAT					
C	8008-8604	BJ60,FJ60		FR	58041-90A00-	1	455	572
	8008-	BJ60,HJ60,FJ60		RR	58043-90A00-	1	455	
C	8604-	FJ60		FR	58041-90A01-	1	573	
	8510-	HJ60		FR		1	567	

(8008-)

WGV (8008-8110)

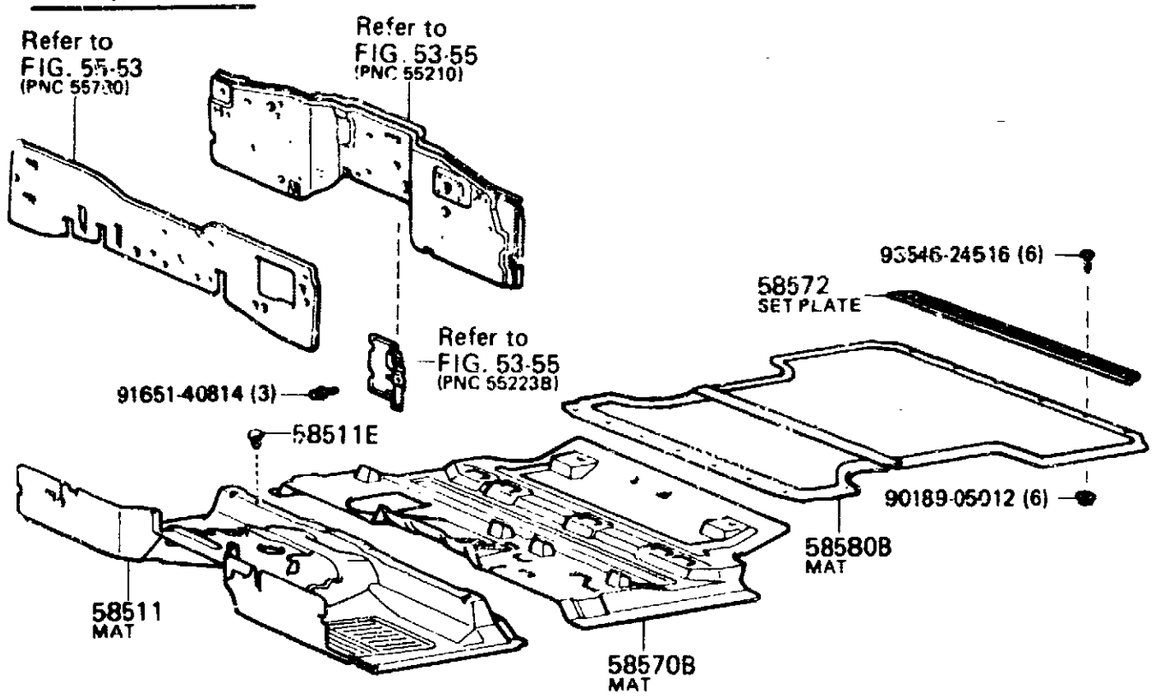

WGG

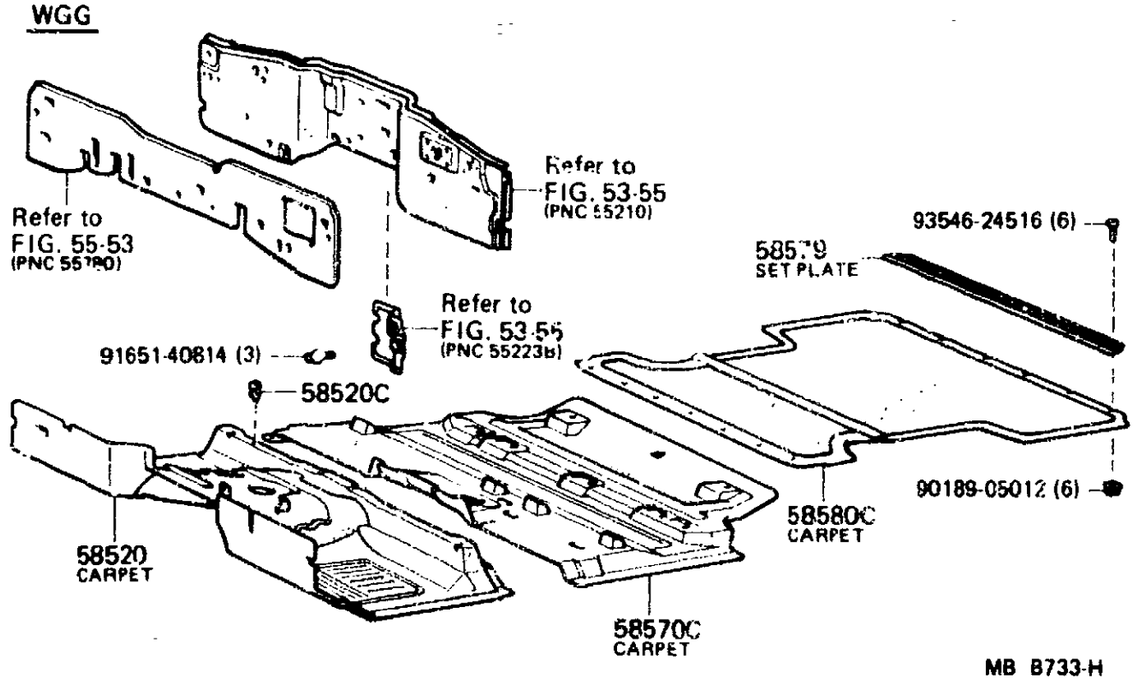

MB B733-H

GENUINE TOYOTA PARTS

	PROD.DATE	MODELS	DESCRIPTION	R/P	PART NUMBER	QTY	REV.REF.CODE FROM	REV.REF.CODE UP TO
	FIG.	58-54 FLOOR MAT & SILENCER PAD						
		58511 MAT, FLOOR, FRONT						
	8008-8110	BJ60,FJ60..WGV	BENCH SEAT		58510-90A01-	1	455	458
	8008-8110	BJ60,FJ60..WGV	SEPARATE SEAT		58510-90A04-	1	455	458
		58511E CLIP (FOR FRONT FLOOR MAT)						
C	8608-	HJ60,FJ60			90467-12035-	1	601	
		58520 CARPET ASSY, FRONT FLOOR						
	8411-8504	BJ60	GRAY		58510-90A49-03	1	515	554
	8411-8504	BJ60	DARK BROWN		58510-90A49-06	1	515	554
	8110-8210	BJ60,FJ60	SEPARATE SEAT		58510-90A14-	1	459	466
	8210-8411	BJ60,FJ60	GRAY		58510-90A31-03	1	467	514
	8210-8411	BJ60,FJ60	DARK BROWN		58510-90A31-06	1	467	514
C	8504-8604	BJ60,FJ60	GRAY		58510-90A49-03	1	555	572
C	8504-8604	BJ60,FJ60	DARK BROWN		58510-90A49-06	1	555	572
	8411-8504	FJ60	GRAY		58510-90A31-03	1	515	554
	8411-8504	FJ60	DARK BROWN		58510-90A31-06	1	515	554
C	8604-	FJ60	SHADOW GRAY		58510-90A98-03 (58510-90G06-03)	1	573	
C	8604-	FJ60	SEPIA BROWN		58510-90A98-06 (58510-90G06-06)	1	573	
	8008-8110	FJ60..WGG	BENCH SEAT		58510-90A11-	1	455	458
	8008-8110	FJ60..WGG	SEPARATE SEAT		58510-90A14-	1	455	458
	8510-	HJ60..ATM	SHADOW GRAY		58510-90A85-03	1	567	
	8510-	HJ60..ATM	SEPIA BROWN		58510-90A85-06	1	567	
	8510-	HJ60..MTM	SHADOW GRAY		58510-90A98-03 (58510-90G06-03)	1	567	
	8510-	HJ60..MTM	SEPIA BROWN		58510-90A98-06 (58510-90G06-06)	1	567	
		58520C CLIP (FOR FRONT FLOOR CARPET)						
C	8604-	FJ60	SHADOW GRAY		90467-12035-03	2	573	

	PROD.DATE	MODELS	DESCRIPTION	R/P	PART NUMBER	QTY	REV.REF.CODE FROM	REV.REF.CODE UP TO
		58520C CLIP (FOR FRONT FLOOR CARPET) CONTINUED						
C	8604-	FJ60	SEPIA BROWN		90467-12035-06	2	573	
	8510-	HJ60	SHADOW GRAY		90467-12035-03	1	567	
	8510-	HJ60	SEPIA BROWN		90467-12035-06	1	567	
		58570B MAT ASSY, REAR FLOOR						
	8008-8110	BJ60,FJ60••WGV	BENCH SEAT		58540-90A01-	1	455	458
	8008-8110	BJ60,FJ60••WGV	SEPARATE SEAT		58540-90A03-	1	455	458
		58570C CARPET ASSY, REAR FLOOR						
	8411-8504	BJ60	GRAY		58540-90A52-03	1	515	554
	8411-8504	BJ60	DARK BROWN		58540-90A52-06	1	515	554
	8110-8210	BJ60,FJ60	SEPARATE SEAT,W/RR HEATER		58540-90A19-06	1	459	466
	8210-8411	BJ60,FJ60	W/RR HEATER,GRAY		58540-90A19-03	1	467	514
	8210-8411	BJ60,FJ60	W/RR HEATER,DARK BROWN		58540-90A19-06	1	467	514
C	8504-8604	BJ60,FJ60	GRAY		58540-90A52-03	1	555	572
C	8504-8604	BJ60,FJ60	DARK BROWN		58540-90A52-06	1	555	572
	8210-8504	FJ60	GRAY		58540-90A13-03	1	467	554
	8210-8504	FJ60	DARK BROWN		58540-90A13-06	1	467	554
	8411-8504	FJ60	W/RR HEATER,GRAY		58540-90A19-03	1	515	554
	8411-8504	FJ60	W/RR HEATER,DARK BROWN		58540-90A19-06	1	515	554
C	8504-8604	FJ60	W/RR HEATER,GRAY		58540-90A48-03	1	555	
C	8504-8604	FJ60	W/RR HEATER,DARK BROWN		58540-90A48-06	1	555	
C	8604-	FJ60	SHADOW GRAY		58540-90A83-03	1	573	
C	8604-	FJ60	SEPIA BROWN		58540-90A83-06	1	573	

	PROD.DATE	MODELS	DESCRIPTION	R/P	PART NUMBER	QTY	REV.REF.CODE FROM	REV.REF.CODE UP TO
		58570C CARPET ASSY, REAR FLOOR CONTINUED						
C	8604-	FJ60	W/RR HEATER,SHADOW GRAY		58540-90G14-03	1	573	
C	8604-	FJ60	W/RR HEATER,SEPIA BROWN		58540-90G14-06	1	573	
	8008-8110	FJ60••WGG	BENCH SEAT		58540-90A11-06	1	455	458
	8008-8110	FJ60••WGG	BENCH SEAT,W/HEATER		58540-90A16-06	1	455	458
	8008-8110	FJ60••WGG	SEPARATE SEAT,W/HEATER		58540-90A19-06	1	455	458
	8008-8210	FJ60••WGG	SEPARATE SEAT		58540-90A13-06	1	455	466
	8510-	HJ60	SHADOW GRAY		58540-90A83-03	1	567	
	8510-	HJ60	SEPIA BROWN		58540-90A83-06	1	567	
		58572 SET PLATE, REAR FLOOR MAT, REAR						
	8008-8110	BJ60,FJ60••WGV			58573-90A00-	1	455	458
		58579 SET PLATE, REAR FLOOR CARPET, NO.1						
	8110-	BJ60,HJ60,FJ60			58573-90A00-	1	459	
	8008-8110	FJ60••WGG				1	455	458
		58580B MAT ASSY, REAR FLOOR, REAR						
	8008-8110	BJ60,FJ60••WGV	DARK BROWN		58581-90A00-06	1	455	458
		58580C CARPET ASSY, REAR FLOOR, REAR						
	8411-8504	BJ60	GRAY		58570-90A00-13	1	515	554
	8411-8504	BJ60	SEPIA BROWN		58570-90A00-16	1	515	554
	8110-8411	BJ60,FJ60	DARK BROWN		58570-90A00-06	1	459	514
	8210-8411	BJ60,FJ60	GRAY		58570-90A00-03	1	467	514
C	8504-8604	BJ60,FJ60	GRAY		58570-90A00-13	1	555	572
C	8504-8604	BJ60,FJ60	SEPIA BROWN		58570-90A00-16	1	555	572
	8411-8504	FJ60	GRAY		58570-90A00-03	1	515	554

FIG.58-54 **GENUINE TOYOTA PARTS** 3-A4 **GENUINE TOYOTA PARTS**

	PROD.DATE	MODELS	DESCRIPTION	R/P	PART NUMBER	QTY	REV.REF.CODE FROM	REV.REF.CODE UP TO
		+--------+						
		I 58580C I CARPET ASSY, REAR FLOOR, REAR						
		CONTINUED						
	8411-8504	FJ60	DARK BROWN		58570-90A00-06	1	515	554
C	8604-	FJ60	SHADOW GRAY		58570-90A32-03	1	573	
C	8604-	FJ60	SEPIA BROWN		58570-90A32-06	1	573	
	8008-8110	FJ60••WGG	DARK BROWN		58570-90A00-06	1	455	458
	8510-	HJ60	SHADOW GRAY		58570-90A28-03	1	567	
	8510-	HJ60	SEPIA BROWN		58570-90A28-06	1	567	

PROD.DATE	MODELS	DESCRIPTION	R/P	PART NUMBER	QTY	REV.REF.CODE FROM	REV.REF.CODE UP TO

FIG.58-55 CONSOLE BOX & BRACKET

(8008-8510); (8510-8604)FJ60

(8510-8604)HJ60; (8604-)

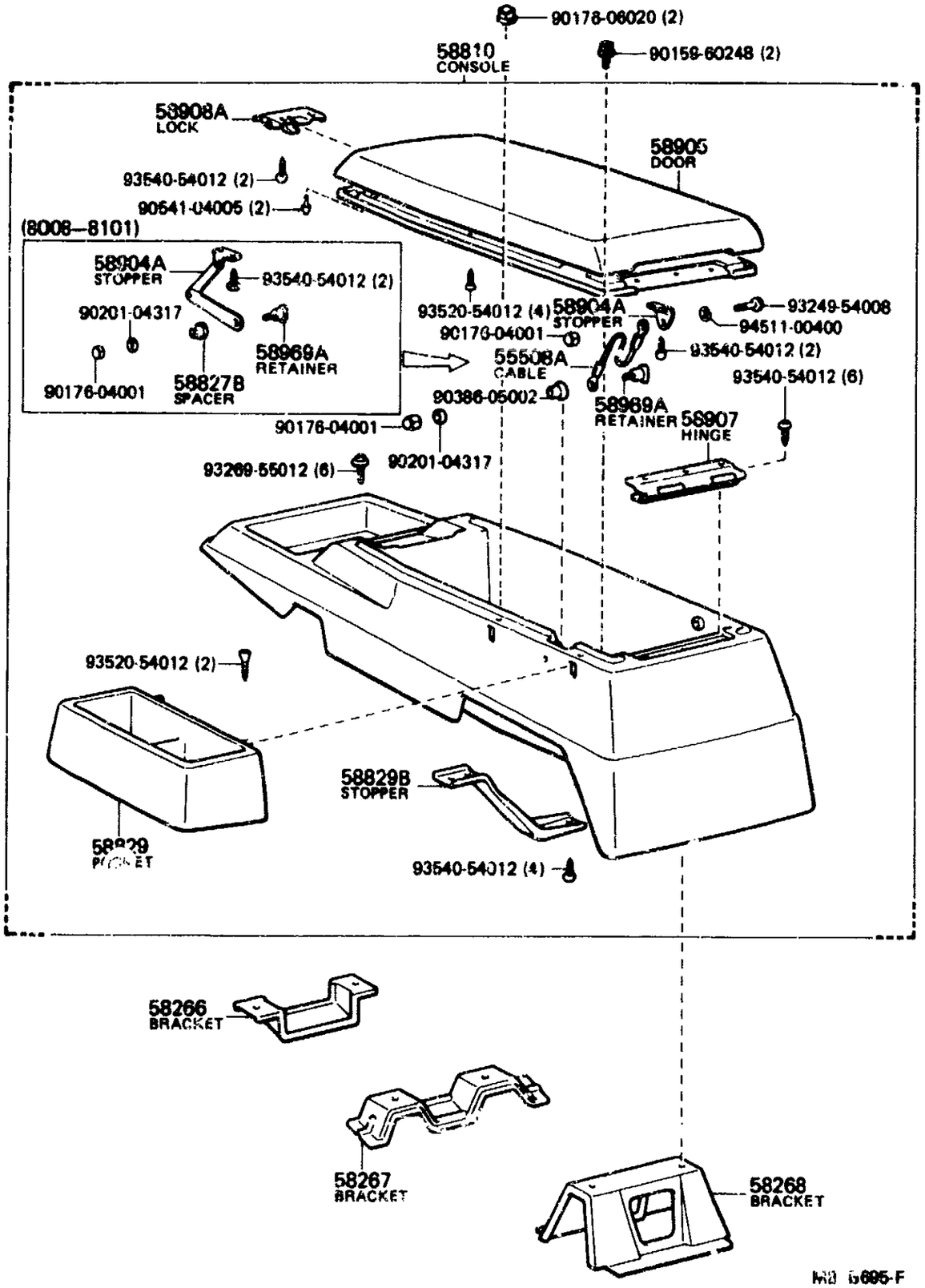

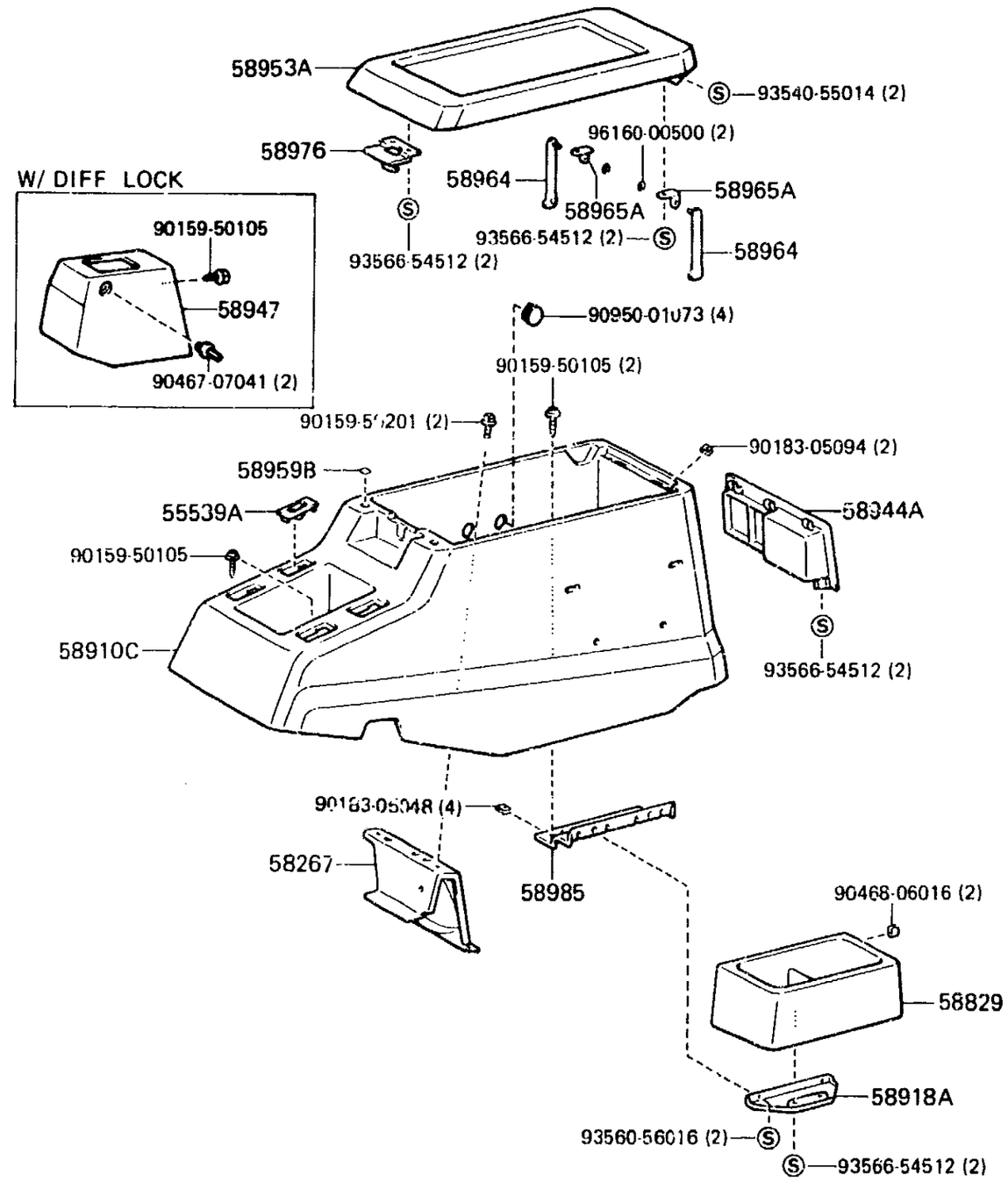

FIG.58-55 CONSOLE BOX & BRACKET

(8510-)

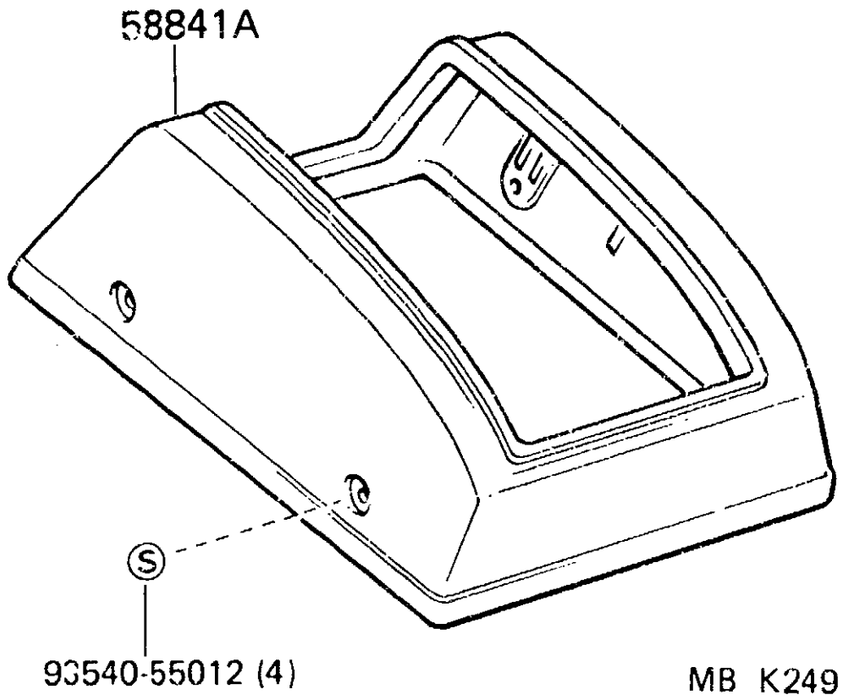

GENUINE TOYOTA PARTS

	PROD.DATE	MODELS	DESCRIPTION	R/P	PART NUMBER	QTY	REV.REF.CODE FROM	REV.REF.CODE UP TO
	FIG.	58-55 CONSOLE BOX & BRACKET						
		55508A	CABLE SUB-ASSY, GLOVE COMPARTMENT DOOR STOPPER					
C	8101-8604	BJ60,FJ60			55508-30020-	1		572
		55539A	COVER, SPARE SWITCH HOLE					
C	8604-	FJ60	SHADOW GRAY		55539-20020-13	4	573	
C	8604-	FJ60	SEPIA BROWN		55539-20020-26	4	573	
	8510-	HJ60	SHADOW GRAY		55539-20020-13	3	567	
	8510-	HJ60	SEPIA BROWN		55539-20020-26	3	567	
		58266	BRACKET, CONSOLE BOX SUPPORT, FRONT					
	8008-8219	BJ60,FJ60			58995-90A00-	1	455	466
		58267	BRACKET, CONSOLE BOX SUPPORT, CENTER					
	8411-8504	BJ60			58996-90A02-	1	515	554
	8008-8411	BJ60,FJ60			58996-90A00-	1	455	514
C	8504-8604	BJ60,FJ60			58996-90A02-	1	555	572
	8411-8504	FJ60			58996-90A00-	1	515	554
C	8604-	FJ60			58996-90A04-	1	573	
	8510-	HJ60				1	567	
		58268	BRACKET, CONSOLE BOX SUPPORT, REAR					
	8411-8504	BJ60			58997-90A01-	1	515	554
	8008-8411	BJ60,FJ60			58997-90A00-	1	455	514
C	8504-8604	BJ60,FJ60			58997-90A01-	1	555	572
	8411-8504	FJ60			58997-90A00-	1	515	554
C	8604-	FJ60			58997-90A02-	1	573	
		58810	CONSOLE ASSY					
	8411-8504	BJ60	SHADOW GRAY		58810-90A01-13	1	515	554
	8411-8504	BJ60	SEPIA BROWN		58810-90A01-16	1	515	554
	8008-8411	BJ60,FJ60	DARK BROWN		58810-90A01-06	1	455	514

	PROD.DATE	MODELS	DESCRIPTION	R/P	PART NUMBER	QTY	REV.REF.CODE FROM	REV.REF.CODE UP TO
		58810 CONSOLE ASSY CONTINUED						
	8210-8411	BJ60,FJ60	SHADOW GRAY	#	58810-90A01-03 (58810-90A01-13)	1	467	514
C	8504-8604	BJ60,FJ60	SHADOW GRAY		58810-90A01-13	1	555	572
C	8504-8604	BJ60,FJ60	SEPIA BROWN		58810-90A01-16	1	555	572
	8411-8504	FJ60	SHADOW GRAY	#	58810-90A01-03 (58810-90A01-13)	1	515	554
	8411-8504	FJ60	DARK BROWN		58810-90A01-06	1	515	554
		58827B SPACER, CONSOLE COMPARTMENT DOOR STOPPER						
	8008-8101	BJ60,FJ60			58827-20021-	1	455	
		58829 POCKET, CONSOLE BOX						
	8411-8504	BJ60	SEPIA BROWN		58825-90A00-16	1	515	554
	8008-8411	BJ60,FJ60	DARK BROWN		58825-90A00-06	1	455	514
C	8210-8604	BJ60,FJ60	SHADOW GRAY		58825-90A00-03	1	467	572
C	8504-8604	BJ60,FJ60	SEPIA BROWN		58825-90A00-16	1	555	572
	8411-8504	FJ60	DARK BROWN		58825-90A00-06	1	515	554
C	8604-	FJ60	SHADOW GRAY		58825-90A01-03	1	573	
C	8604-	FJ60	SEPIA BROWN		58825-90A01-06	1	573	
	8510-	HJ60	SHADOW GRAY		58825-90A01-03	1	567	
	8510-	HJ60	SEPIA BROWN		58825-90A01-06	1	567	
		58829B STOPPER, CONSOLE BOX POCKET						
C	8008-8604	BJ60,FJ60			58829-90A00-	1	455	572
		58841A COVER, SHIFTING HOLE						
	8510-	HJ60••ATM	SHADOW GRAY		58841-90A01-03	1	567	
	8510-	HJ60••ATM	SEPIA BROWN		58841-90A01-06	1	567	

	PROD.DATE	MODELS	DESCRIPTION	R/P	PART NUMBER	QTY	REV.REF.CODE FROM	REV.REF.CODE UP TO
		58904A STOPPER SUB-ASSY, CONSOLE COMPARTMENT DOOR						
	8008-8101	BJ60,FJ60			58909-90A00-	1	455	
C	8101-8604	BJ60,FJ60			58969-90A00-	1		572
		58905 DOOR SUB-ASSY, CONSOLE COMPARTMENT						
	8411-8504	BJ60	SHADOW GRAY		58951-90A00-13	1	515	554
	8411-8504	BJ60	SEPIA BROWN		58951-90A00-16	1	515	554
	8008-8411	BJ60,FJ60	DARK BROWN		58951-90A00-06	1	455	514
	8210-8411	BJ60,FJ60	SHADOW GRAY	#	58951-90A00-03 (58951-90A00-13)	1	467	514
C	8504-8604	BJ60,FJ60	SHADOW GRAY		58951-90A00-13	1	555	572
C	8504-8604	BJ60,FJ60	SEPIA BROWN		58951-90A00-16	1	555	572
	8411-8504	FJ60	SHADOW GRAY	#	58951-90A00-03 (58951-90A00-13)	1	515	554
	8411-8504	FJ60	DARK BROWN		58951-90A00-06	1	515	554
		58907 HINGE SUB-ASSY, CONSOLE COMPARTMENT DOOR						
C	8008-8604	BJ60,FJ60			58907-90A00-	1	455	572
		58908A LOCK SUB-ASSY, CONSOLE COMPARTMENT DOOR						
C	8008-8604	BJ60,FJ60		#	58803-20010- (58908-12010-)	1	455	572
		58910C BOX ASSY, CONSOLE, REAR						
C	8604-	FJ60	SHADOW GRAY		58911-90A02-03	1	573	
C	8604-	FJ60	SEPIA BROWN		58911-90A02-06	1	573	
	8510-	HJ60	SHADOW GRAY		58911-90A03-03	1	567	
	8510-	HJ60	SEPIA BROWN		58911-90A03-06	1	567	
C	8608-	HJ60	W/DIFF LOCK,SHADOW GRAY		58911-90A05-03	1	601	
C	8608-	HJ60	W/DIFF LOCK,SEPIA BROWN		58911-90A05-06	1	601	

	PROD.DATE	MODELS	DESCRIPTION	R/P	PART NUMBER	QTY	REV.REF.CODE FROM	REV.REF.CODE UP TO
		58918A BRACKET, BOX SUPPORT						
C	8604-	FJ60			58918-90A00-	1	573	
	8510-	HJ60				1	567	
		58944A COVER, CONSOLE, REAR						
C	8604-	FJ60	SHADOW GRAY		58944-90A00-03	1	573	
C	8604-	FJ60	SEPIA BROWN		58944-90A00-06	1	573	
	8510-	HJ60	SHADOW GRAY		58944-90A01-03	1	567	
	8510-	HJ60	SEPIA BROWN		58944-90A01-06	1	567	
		58947 COVER, DIFFERENTIAL LOCK LEVER						
C	8608-	HJ60			58947-90A03-03	1	601	
C	8608-	HJ60			58947-90A03-06	1	601	
		58953A DOOR, CONSOLE COMPARTMENT, UPPER						
C	8604-	FJ60	SHADOW GRAY		58951-90A01-03	1	573	
C	8604-	FJ60	SEPIA BROWN		58951-90A01-06	1	573	
	8510-	HJ60	SHADOW GRAY		58951-90A01-03	1	567	
	8510-	HJ60	SEPIA BROWN		58951-90A01-06	1	567	
		58959B CUSHION, CONSOLE COMPARTMENT DOOR						
C	8604-	FJ60			58959-16010-	2	573	
	8510-	HJ60				2	567	
		58964 STOPPER, CONSOLE COMPARTMENT DOOR, NO.1						
C	8604-	FJ60	LH		58964-30030-	1	573	
C	8604-	FJ60	RH		58964-90K00-	1	573	
	8510-	HJ60	LH		58964-30030-	1	567	
	8510-	HJ60	RH		58964-90K00-	1	567	
		58965A STOPPER, CONSOLE COMPARTMENT DOOR, NO.2						
C	8604-	FJ60	LH		58965-12010-	1	573	
C	8604-	FJ60	RH		58965-20020-	1	573	
	8510-	HJ60	LH		58965-12010-	1	567	
	8510-	HJ60	RH		58965-20020-	1	567	
		58969A RETAINER, CONSOLE COMPARTMENT DOOR STOPPER						
C	8008-8604	BJ60,FJ60			58969-20010-	1	455	572
		58976 STRIKER, CONSOLE COMPARTMENT DOOR LOCK						
C	8604-	FJ60			58976-20010-	1	573	
	8510-	HJ60				1	567	
		58985 RETAINER, CONSOLE BOX						
C	8604-	FJ60			58985-90A00-	1	573	
	8510-	HJ60				1	567	

(8008-)

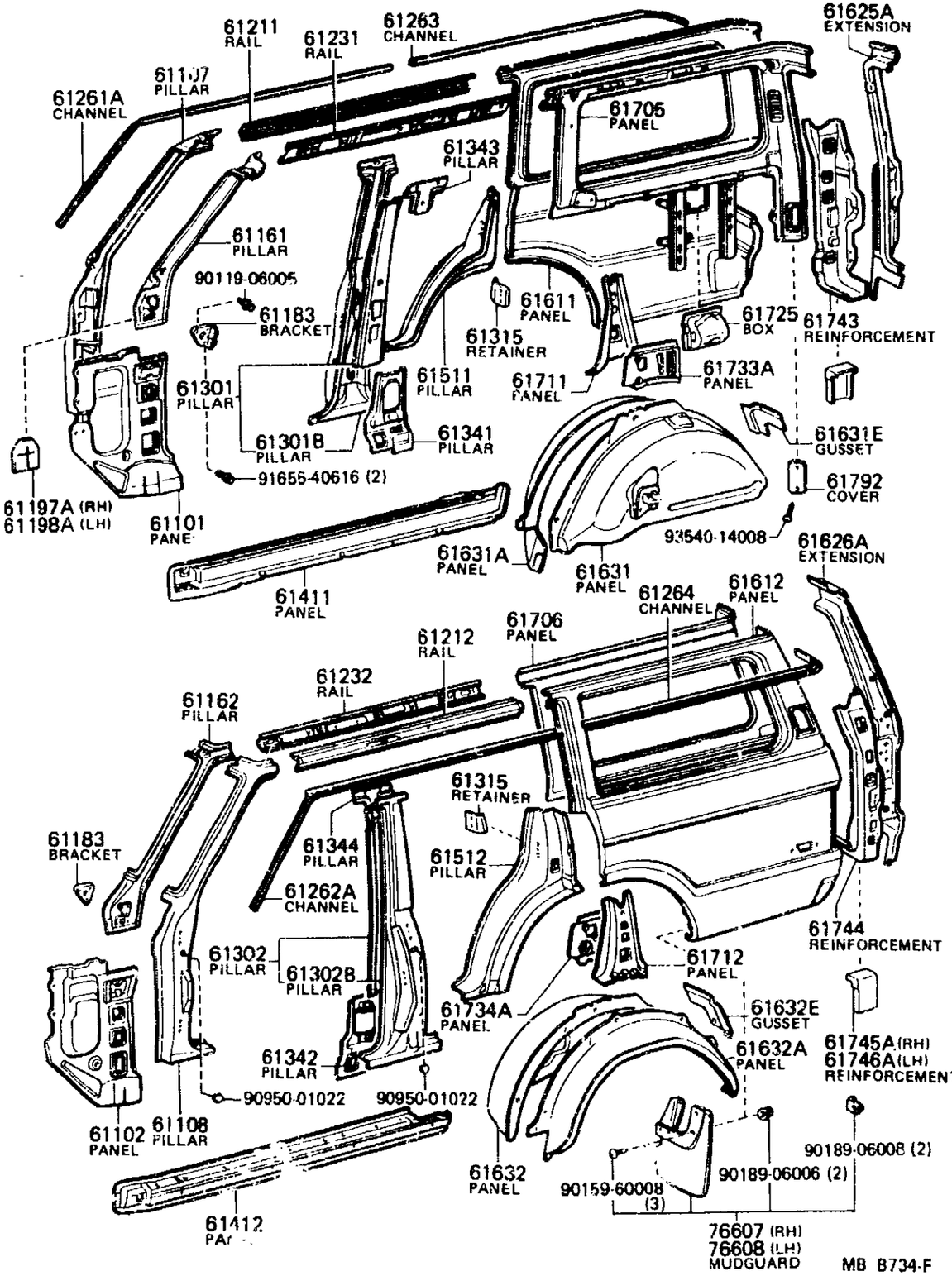

GENUINE TOYOTA PARTS

	PROD.DATE	MODELS	DESCRIPTION	R/P	PART NUMBER	QTY	REV.REF.CODE FROM	REV.REF.CODE UP TO
	FIG.	61-51 SIDE MEMBER						
		61101 PANEL SUB-ASSY, COWL SIDE, RH						
	8411-8504	BJ60			61101-90A08-	1	515	554
	8008-8411	BJ60,FJ60			# 61101-90A00- (61101-90A04-)	1	455	514
	8504-	BJ60,HJ60,FJ60			61101-90A08-	1	555	
	8411-8504	FJ60			61101-90A04-	1	515	554
		61102 PANEL SUB-ASSY, COWL SIDE, LH						
	8411-8504	BJ60			61102-90A07-	1	515	554
	8008-8411	BJ60,FJ60			# 61102-90A04- (61102-90A07-)	1	455	514
	8504-	BJ60,HJ60,FJ60			61102-90A07-	1	555	
	8411-8504	FJ60			# 61102-90A04- (61102-90A07-)	1	515	554
		61107 PILLAR SUB-ASSY, FRONT BODY OUTER, RH						
	8008-8309	BJ60,FJ60			61027-90A00-	1	455	486
	8309-	BJ60,HJ60,FJ60			61027-90A04-	1	487	
		61108 PILLAR SUB-ASSY, FRONT BODY OUTER, LH						
	8008-8309	BJ60,FJ60			61028-90A00-	1	455	486
	8309-	BJ60,HJ60,FJ60			61028-90A04-	1	487	
		61161 PILLAR, FRONT BODY, UPPER INNER RH						
C	8008-8510	BJ60,FJ60			# 61161-90A00- (61161-90A02-)	1	455	566
C	8510-	HJ60,FJ60			61161-90A02-	1	567	
		61162 PILLAR, FRONT BODY, UPPER INNER LH						
	8008-8010	BJ60,FJ60			# 61162-90A00- (61162-90A02-)	1	455	
C	8010-8510	BJ60,FJ60			61162-90A01-	1		566
C	8510-	HJ60,FJ60			61162-90A02-	1	567	
		61183 BRACKET, INSTRUMENT PANEL SIDE						
	8008-	BJ60,HJ60,FJ60	RH		61183-90A01-	1	455	
	8008-	BJ60,HJ60,FJ60	LH		61184-90A00-	1	455	

	PROD.DATE	MODELS	DESCRIPTION	R/P	PART NUMBER	QTY	REV.REF.CODE FROM	REV.REF.CODE UP TO
		61197A COVER, FRONT PILLAR, RH						
C	8510-	HJ60••ATM			61197-90AC0-	1	567	
		61198A COVER, FRONT PILLAR, LH						
C	8510-	HJ60••ATM			61197-90A00-	1	567	
		61211 RAIL, ROOF SIDE, OUTER RH						
	8008-8210	BJ60,FJ60			# 61211-90A00- (61211-90H00-)	1	455	466
	8210-8302	BJ60,FJ60			61211-90A01-	1	467	
	8302-	BJ60,HJ60,FJ60			61211-90H00-	1		
		61212 RAIL, ROOF SIDE, OUTER LH						
	8008-8210	BJ60,FJ60			# 61212-90A00- (61212-90H00-)	1	455	466
	8210-8302	BJ60,FJ60			61212-90A01-	1	467	
	8302-	BJ60,HJ60,FJ60			61212-90H00-	1		
		61231 RAIL, ROOF SIDE, INNER RH						
	8008-8210	BJ60,FJ60			# 61231-90A00- (61231-90A02-) (61211-90A01-)	1	455	466
	8210-	BJ60,HJ60,FJ60			61231-90A02-	1	467	
		61232 RAIL, ROOF SIDE INNER, LH						
	8008-8210	BJ60,FJ60			# 61232-90A00- (61232-90A01-) (61212-90A01-)	1	455	466
	8210-	BJ60,HJ60,FJ60			61232-90A01-	1	467	
		61261A CHANNEL, ROOF DRIP SIDE, FRONT RH						
	8008-	BJ60,HJ60,FJ60			61263-90A00-	1	455	
		61262A CHANNEL, ROOF DRIP SIDE, FRONT LH						
	8008-	BJ60,HJ60,FJ60			61264-90A00-	1	455	
		61263 CHANNEL, ROOF DRIP, REAR RH						
	8008-	BJ60,HJ60,FJ60			61267-90A00-	1	455	

	PROD.DATE	MODELS	DESCRIPTION	R/P	PART NUMBER	QTY	REV.REF.CODE FROM	REV.REF.CODE UP TO
		61264 CHANNEL, ROOF DRIP, REAR LH						
	8008-	BJ60,HJ60,FJ60			61268-90A00-	1	455	
		61301 PILLAR SUB-ASSY, CENTER BODY, RH						
	8008-8309	BJ60,FJ60			61330-90A00-	1	455	486
C	8309-8608	BJ60,HJ60,FJ60			61330-90A03-	1	487	600
C	8608-	FJ60				1	601	
C	8608-	HJ60			61330-90A04-	1	601	
		61301B PILLAR, CENTER BODY OUTER, RH						
	8008-8309	BJ60,FJ60			# 61301-90A02- (61301-90A03-)	1	455	486
C	8309-8608	BJ60,HJ60,FJ60			61301-90A04-	1	487	600
C	8608-	FJ60				1	601	
C	8608-	HJ60			61301-90A05-	1	601	
		61302 PILLAR SUB-ASSY, CENTER BODY, LH						
	8008-8309	BJ60,FJ60			61340-90A02-	1	455	486
C	8309-8608	BJ60,HJ60,FJ60			61340-90A06-	1	487	600
C	8608-	FJ60				1	601	
C	8608-	HJ60			61340-90A07-	1	601	
		61302B PILLAR, CENTER BODY OUTER, LH						
	8008-8309	BJ60,FJ60			61302-90A04-	1	455	486
C	8309-8608	BJ60,HJ60,FJ60			61302-90A08-	1	487	600
C	8608-	FJ60				1	601	
C	8608-	HJ60			61302-90A09-	1	601	
		61515 RETAINER, DOOR LOCK STRIKER PLATE						
	8008-	BJ60,HJ60,FJ60	RH		61503-90A00-	1	455	
	8008-	BJ60,HJ60,FJ60	LH		61504-90A00-	1	455	
		61341 PILLAR, CENTER BODY, INNER LOWER RH						
	8008-	BJ60,HJ60,FJ60			61345-90A00-	1	455	

GENUINE TOYOTA PARTS

PROD.DATE	MODELS	DESCRIPTION	R/P	PART NUMBER	QTY	REV.REF.CODE FROM	REV.REF.CODE UP TO
	61342 PILLAR, CENTER BODY, INNER LOWER LH						
8008-	BJ60,HJ60,FJ60			61346-90A00-	1	455	
	61343 PILLAR, CENTER BODY INNER UPPER, RH						
8008-	BJ60,HJ60,FJ60			61341-90A00-	1	455	
	61344 PILLAR, CENTER BODY INNER UPPER, LH						
8008-	BJ60,HJ60,FJ60			61342-90A00-	1	455	
	61411 PANEL, ROCKER, OUTER RH						
8008-8309	BJ60,FJ60			61401-90A02-	1	455	486
8309-	BJ60,HJ60,FJ60			61401-90A06-	1	487	
	61412 PANEL, ROCKER, OUTER LH						
8008-8309	BJ60,FJ60			61402-90A02-	1	455	486
8309-	BJ60,HJ60,FJ60			61402-90A06-	1	487	
	61511 PILLAR, QUARTER LOCK, RH						
8008-	BJ60,HJ60,FJ60			61511-90A01-	1	455	
	61512 PILLAR, QUARTER LOCK, LH						
8008-	BJ60,HJ60,FJ60			61512-90A01-	1	455	
	61611 PANEL, QUARTER, RH						
8008-	BJ60,HJ60,FJ60			61611-90A01-	1	455	
	61612 PANEL, QUARTER, LH						
8008-	BJ60,HJ60,FJ60			61612-90A01-	1	455	
	61625A EXTENSION SUB-ASSY, QUARTER PANEL, RH						
8008-8212	BJ60,FJ60			61031-90A00-	1	455	
8212-	BJ60,HJ60,FJ60			61031-90A02-	1		
	61626A EXTENSION SUB-ASSY, QUARTER PANEL, LH						
8008-	BJ60,HJ60,FJ60			61032-90A00-	1	455	
	61631 PANEL, QUARTER WHEEL HOUSE, RH						
8411-8504	BJ60			61607-90A05-	1	515	554

PROD.DATE	MODELS	DESCRIPTION	R/P	PART NUMBER	QTY	REV.REF.CODE FROM	REV.REF.CODE UP TO
	61631 PANEL, QUARTER WHEEL HOUSE, RH CONTINUED						
8008-8411	BJ60,FJ60			61607-90A01-	1	455	514
8504-	BJ60,HJ60,FJ60			61607-90A05-	1	555	
8411-8504	FJ60			61607-90A01-	1	515	554
	61631A PANEL, QUARTER WHEEL HOUSE, OUTER RH						
8008-8101	BJ60,FJ60			# 61631-90A02- (61631-90A03-)	1	455	
8101-	BJ60,HJ60,FJ60			61631-90A03-	1		
	61631E GUSSET, QUARTER WHEEL HOUSE, REAR RH						
8008-	BJ60,HJ60,FJ60			61645-90A00-	1	455	
	61632 PANEL, QUARTER WHEEL HOUSE, LH						
8008-	BJ60,HJ60,FJ60			61608-90A01-	1	455	
	61632A PANEL, QUARTER WHEEL HOUSE, OUTER LH						
8008-8101	BJ60,FJ60			# 61632-90A02- (61632-90A03-)	1	455	
8101-	BJ60,HJ60,FJ60			61632-90A03-	1		
	61632E GUSSET, QUARTER WHEEL HOUSE, REAR LH						
8008-	BJ60,HJ60,FJ60			61646-90A00-	1	455	
	61705 PANEL SUB-ASSY, ROOF SIDE, INNER RH						
8008-8210	BJ60,FJ60			61705-90A00-	1	455	466
C 8210-8604	BJ60,HJ60,FJ60			61705-90A03-	1	467	572
C 8604-	FJ60			61705-90A15-	1	573	
C 8604-	HJ60			61705-90A03-	1	573	
	61706 PANEL SUB-ASSY, ROOF SIDE, INNER LH						
8008-8210	BJ60,FJ60	W/O RR WIPER		61706-90A00-	1	455	466
8008-8210	BJ60,FJ60	W/RR WIPER		61706-90A02-	1	455	466
8210-8309	BJ60,FJ60	W/O RR WIPER	#	61706-90A05- (61706-90A18-)	1	467	486
8210-8309	BJ60,FJ60	W/RR WIPER	#	61706-90A07- (61706-90A19-)	1	467	486

GENUINE TOYOTA PARTS

	PROD.DATE	MODELS	DESCRIPTION	R/P	PART NUMBER	QTY	REV.REF.CODE FROM	REV.REF.CODE UP TO
		61706 PANEL SUB-ASSY, ROOF SIDE, INNER LH CONTINUED						
C	8309-8604	BJ60,FJ60	W/O RR WIPER	#	61706-90A18- (61706-90A26-)	1	487	572
C	8309-8604	BJ60,FJ60	W/RR WIPER	#	61706-90A19- (61706-90A27-)	1	487	572
C	8604-	FJ60	W/O RR WIPER		61706-90A46-	1	573	
C	8604-	FJ60	W/RR WIPER		61706-90A47-	1	573	
C	8510-	HJ60	W/O RR WIPER		61706-90A33-	1	567	
C	8510-	HJ60	W/RR WIPER		61706-90A35-	1	567	
		61711 PANEL, ROOF SIDE, OUTER RH						
	8411-8504	BJ60			61711-90A01-	1	515	554
	8008-8411	BJ60,FJ60			61711-90A00-	1	455	514
	8504-	BJ60,HJ60,FJ60			61711-90A01-	1	555	
	8411-8504	FJ60			61711-90A00-	1	515	554
		61712 PANEL, ROOF SIDE, OUTER LH						
	8008-8210	BJ60,FJ60			61712-90A00-	1	455	466
	8210-	BJ60,HJ60,FJ60			61712-90A01-	1	467	
		61725 BOX, FUEL INLET						
	8411-8504	BJ60			61709-90A01-	1	515	554
	8008-8411	BJ60,FJ60			61709-90A00-	1	455	514
	8411-	BJ60,HJ60	W/FUEL LID OPENER		61709-90A02-	1	515	
	8504-	BJ60,HJ60,FJ60			61709-90A01-	1	555	
	8411-8504	FJ60			61709-90A00-	1	515	554
		61733A PANEL, ROOF SIDE, INNER FRONT RH						
	8411-8504	BJ60			61733-90A02-	1	515	554
	8008-8411	BJ60,FJ60			61733-90A00-	1	455	514
	8504-	BJ60,HJ60,FJ60			61733-90A02-	1	555	
	8411-8504	FJ60			61733-90A00-	1	515	554

	PROD.DATE	MODELS	DESCRIPTION	R/P	PART NUMBER	QTY	REV.REF.CODE FROM	REV.REF.CODE UP TO
		61734A PANEL, ROOF SIDE, INNER FRONT LH						
C	8008-8604	BJ60,FJ60			61734-90A00-	1	455	572
C	8604-	FJ60			61734-90A03-	1	573	
	8511-	HJ60				1	567	
		61743 REINFORCEMENT, BACK DOOR OPENING, INNER RH						
	8008-8210	BJ60,FJ60		#	61743-90A00- (61743-90A02-)	1	455	466
	8210-	BJ60,HJ60,FJ60			61743-90A02-	1	467	
		61744 REINFORCEMENT, BACK DOOR OPENING, INNER LH						
	8008-8210	BJ60,FJ60		#	61744-90A00- (61744-90A01-)	1	455	466
C	8210-8604	BJ60,FJ60			61744-90A01-	1	467	572
C	8604-	FJ60			61034-90A00-	1	573	
	8511-	HJ60				1	567	
		61745A REINFORCEMENT, BACK DOOR OPENING, LOWER RH						
	8008-	BJ60,HJ60,FJ60			61745-90A01-	1	455	
		61746A REINFORCEMENT, BACK DOOR OPENING, LOWER LH						
	8008-	BJ60,HJ60,FJ60			61746-90A01-	1	455	
		61792 COVER, ROOF SIDE INNER SERVICE HOLE						
	8008-	BJ60,HJ60,FJ60			61791-90A00-	2	455	
		76607 MUDGUARD SUB-ASSY, QUARTER PANEL, REAR RH						
	8008-	BJ60,HJ60,FJ60			76607-69015-	1	455	
		76608 MUDGUARD SUB-ASSY, QUARTER PANEL, REAR LH						
	8008-	BJ60,HJ60,FJ60			76608-69015-	1	455	

FIG.61-52 SIDE WINDOW

(8008-)

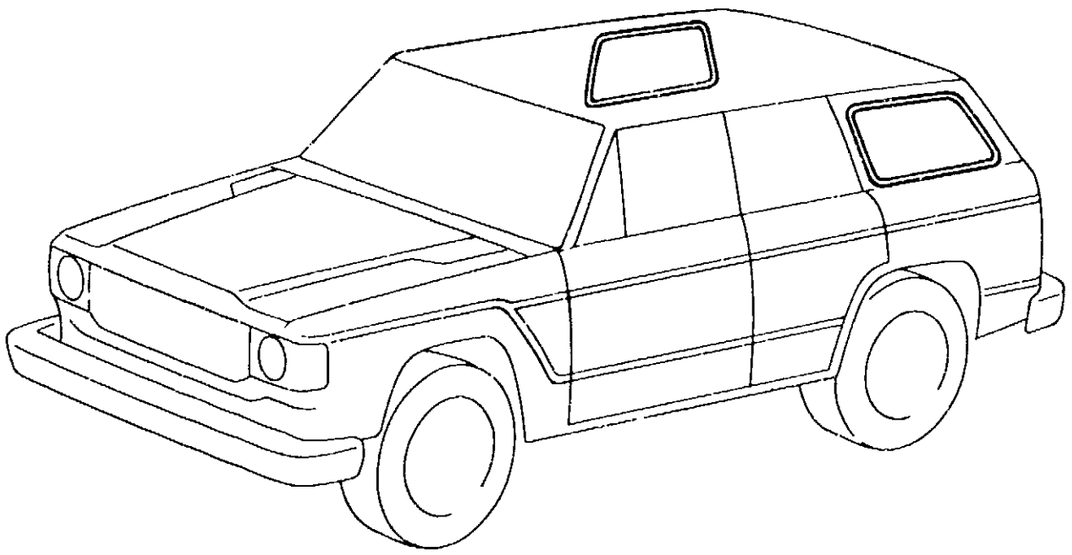

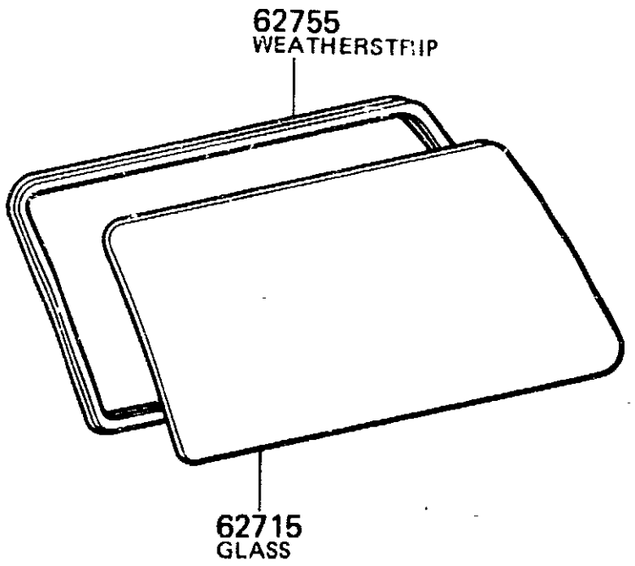

MB 8735

GENUINE TOYOTA PARTS

	PROD.DATE	MODELS	DESCRIPTION	R/P	PART NUMBER	QTY	REV.REF.CODE FROM	REV.REF.CODE UP TO
	FIG.	61-52 SIDE WINDOW						
		62715 GLASS, SIDE WINDOW, NO.1 (FOR FIXED TYPE)						
	8110-8510	BJ60..WGG	RH,*TEM,T=4.0		62711-90A00-	1	459	566
	8110-8510	BJ60..WGG	LH,*TEM,T=4.0		62712-90A00-	1	459	566
	8008-8110	BJ60,FJ60..WGV	RH,*TEM,T=4.0		62711-90A00-	1	455	458
	8008-8110	BJ60,FJ60..WGV	LH,*TEM,T=4.0		62712-90A00-	1	455	458
	8411-	BJ60,HJ60	RH,*TT,T=4.0		62711-90A01-	1	515	572
	8411-	BJ60,HJ60	LH,*TT,T=4.0		62712-90A01-	1	515	572
C	8008-8604	FJ60..WGG	RH,*TT,T=4.0		62711-90A01-	1	455	572
C	8008-8604	FJ60..WGG	LH,*TT,T=4.0		62712-90A01-	1	455	572
C	8604-	HJ60,FJ60	RH,*TT		62711-90A12-	1	573	
C	8604-	HJ60,FJ60	LH,*TT		62712-90A12-	1	573	
		62755 WEATHERSTRIP, SIDE WINDOW, NO.1 (FOR FIXED TYPE)						
	8008-8110	BJ60,FJ60..WGV	W/O MOULDING		62741-90A00-	2	455	458
C	8008-8608	BJ60,HJ60,FJ60	W/MOULDING		62741-90A01-	2	455	600
C	8608-	FJ60	W/O MOULDING		62741-90A00-	2	601	
C	8608-	HJ60	W/MOULDING		62741-90A01-	2	601	

* TEM = Tempered
* TT = Tinted Tempered

(8008-8510)

W/O Carrier

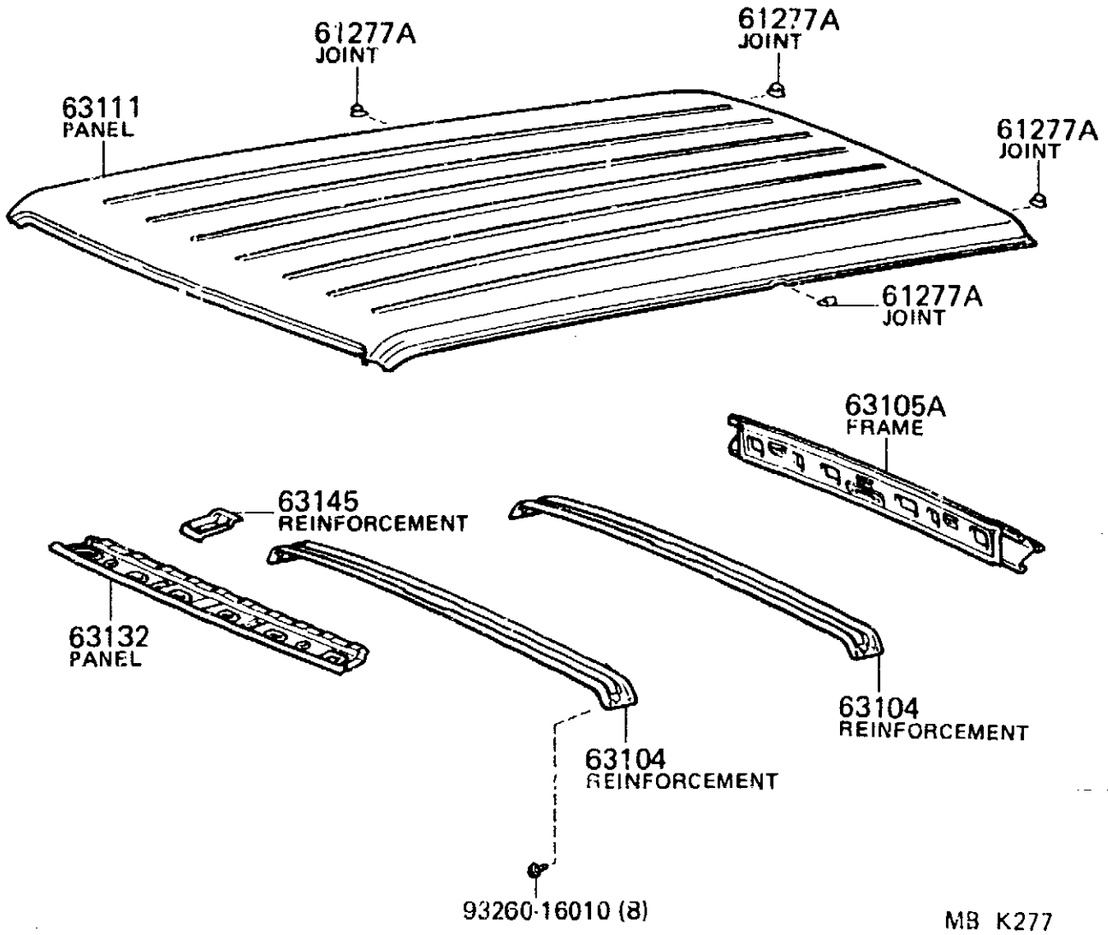

MB K277

(8008-)

W/Carrier

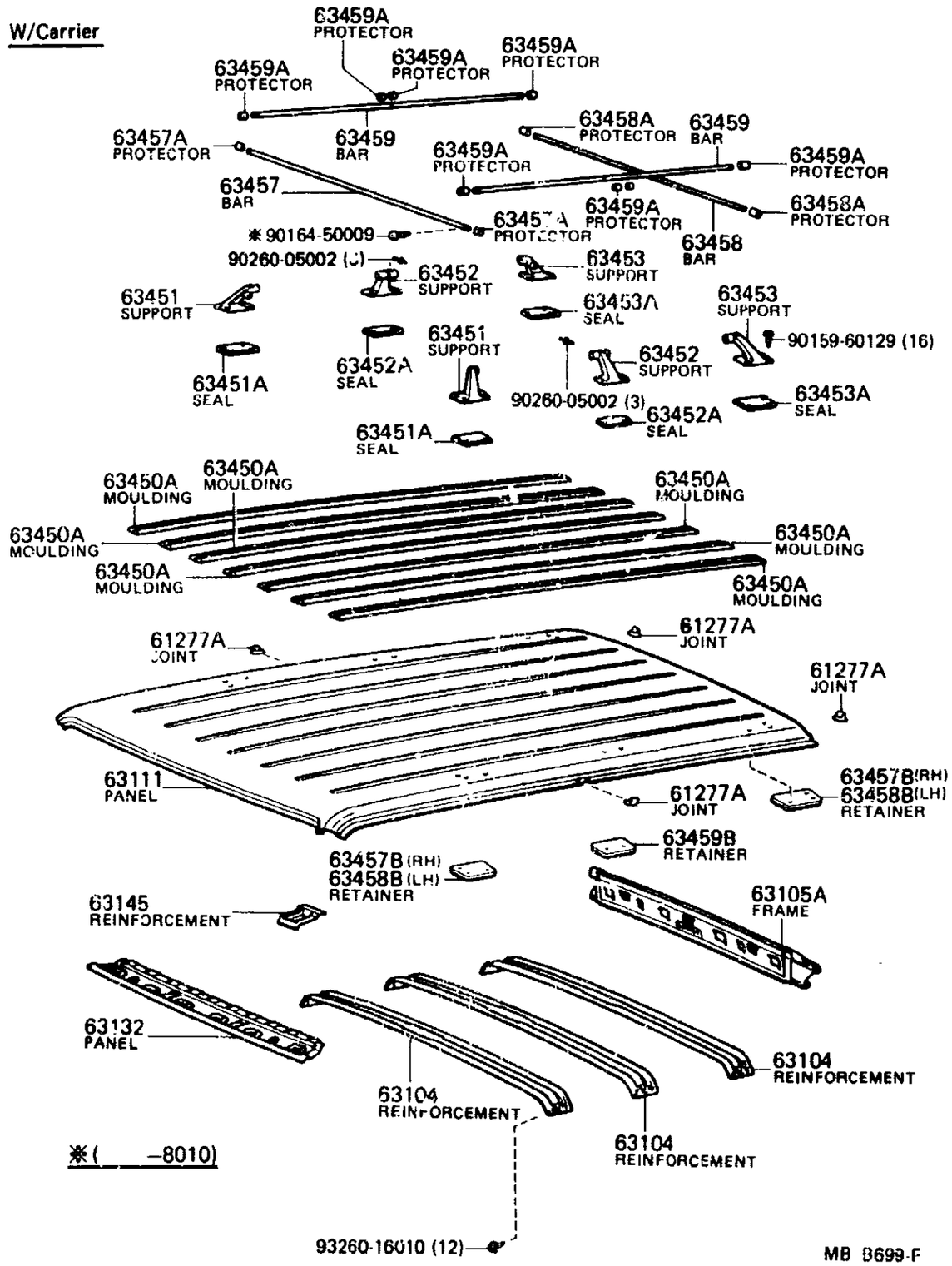

MB 8699-F

PROD.DATE	MODELS	DESCRIPTION	P/P	PART NUMBER	QTY	REV.REF.CODE FROM	REV.REF.CODE UP TO
FIG.	61-53 ROOF PANEL & BACK PANEL						
	61277A JOINT, ROOF DRIP CHANNEL						
8008-8110	BJ60,FJ60..WGV			61277-90A00-	4	455	458
	63104 REINFORCEMENT SUB-ASSY, ROOF PANEL, CENTER						
8008-8110	BJ60,FJ60	W/ROOF CARRIER		63141-90A00-	3	455	458
8008-	BJ60,HJ60,FJ60	W/ROOF CARRIER			3	455	
8110-	FJ60	W/O ROOF CARRIER			2	459	
	63105A FRAME SUB-ASSY, BACK DOOR OPENING						
8008-	BJ60,HJ60,FJ60			63105-90A00-	1	455	
	63111 PANEL, ROOF						
8008-8110	BJ60,FJ60	W/O ROOF CARRIER		63111-90A00-	1	455	458
8008-	BJ60,HJ60,FJ60	W/ROOF CARRIER		63111-90A01-	1	455	
8110-	FJ60	W/O ROOF CARRIER		63111-90A00-	1	459	
	63132 PANEL, WINDSHIELD HEADER, INNER						
8008-	BJ60,HJ60,FJ60			63132-90A00-	1	455	
	63145 REINFORCEMENT, WINDSHIELD HEADER INNER PANEL						
8008-	BJ60,HJ60,FJ60			63145-90A00-	1	455	
	63450A MOULDING, ROOF CARRIER						
8008-	BJ60,HJ60,FJ60			75631-90A00-	7	455	
	63451 SUPPORT, ROOF CARRIER, NO.1						
8008-	BJ60,HJ60,FJ60	RH,FR		63441-90A00-	1	455	
8008-	BJ60,HJ60,FJ60	LH,FR		63442-90A00-	1	455	
	63451A SEAL, ROOF CARRIER, NO.1 SUPPORT						
8008-	BJ60,HJ60,FJ60	RH		63435-90A00-	1	455	
8008-	BJ60,HJ60,FJ60	LH		63436-90A00-	1	455	

PROD.DATE	MODELS	DESCRIPTION	R/P	PART NUMBER	QTY	REV.REF.CODE FROM	REV.REF.CODE UP TO
	63452 SUPPORT, ROOF CARRIER, NO.2						
8008-	DJ60,HJ60,FJ60			63443-90A00-	2	455	
	63452A SEAL, ROOF CARRIER, NO.2 SUPPORT						
8008-	BJ60,HJ60,FJ60			63437-90A00-	2	455	
	63453 SUPPORT, ROOF CARRIER, NO.3						
8008-	BJ60,HJ60,FJ60	LH,RR		63441-90A00-	1	455	
8008-	BJ60,HJ60,FJ60	RH,RR		63442-90A00-	1	455	
	63453A SEAL, ROOF CARRIER, NO.3 SUPPORT						
8008-	BJ60,HJ60,FJ60	RH		63438-90A00-	1	455	
8008-	BJ60,HJ60,FJ60	LH		63439-90A00-	1	455	
	63457 BAR, ROOF CARRIER, FRONT						
8008-	BJ60,HJ60,FJ60			63447-90A00-	1	455	
	63457A PROTECTOR, ROOF CARRIER, FRONT BAR						
8008-	BJ60,HJ60,FJ60			63445-90A00-	2	455	
	63457B RETAINER, ROOF CARRIER, NO.1 RH						
8107-	BJ60,HJ60,FJ60			63457-90A00-	2		
	63458 BAR, ROOF CARRIER, REAR						
8008-	BJ60,HJ60,FJ60			63448-90A00-	1	455	
	63458A PROTECTOR, ROOF CARRIER, REAR BAR						
8008-	BJ60,HJ60,FJ60			63445-90A00-	2	455	
	63458B RETAINER, ROOF CARRIER, NO.1 LH						
8107-	BJ60,HJ60,FJ60			63458-90A00-	2		
	63459 BAR, ROOF CARRIER, SIDE						
8008-	BJ60,HJ60,FJ60			63449-90A00-	2	455	
	63459A PROTECTOR, ROOF CARRIER, SIDE BAR						
8008-	BJ60,HJ60,FJ60	L=21.5		63444-90A00-	8	455	

FIG.61-53 GENUINE TOYOTA PARTS

3-M4

GENUINE TOYOTA PARTS

PROD.DATE	MODELS	DESCRIPTION	R/P	PART NUMBER	QTY	REV.REF.CODE FROM	REV.REF.CODE UP TO
	63459B RETAINER, ROOF CARRIER, NO.2						
8107-	BJ60,HJ60,FJ60			63454-90A00-	2		

PROD.DATE	MODELS	DESCRIPTION	R/P	PART NUMBER	QTY	REV.REF.CODE FROM	REV.REF.CODE UP TO

FIG.61-55 REAR VENTILATOR & ROOF VENTILATOR

(8008-)

MR4-13-0265

GENUINE TOYOTA PARTS

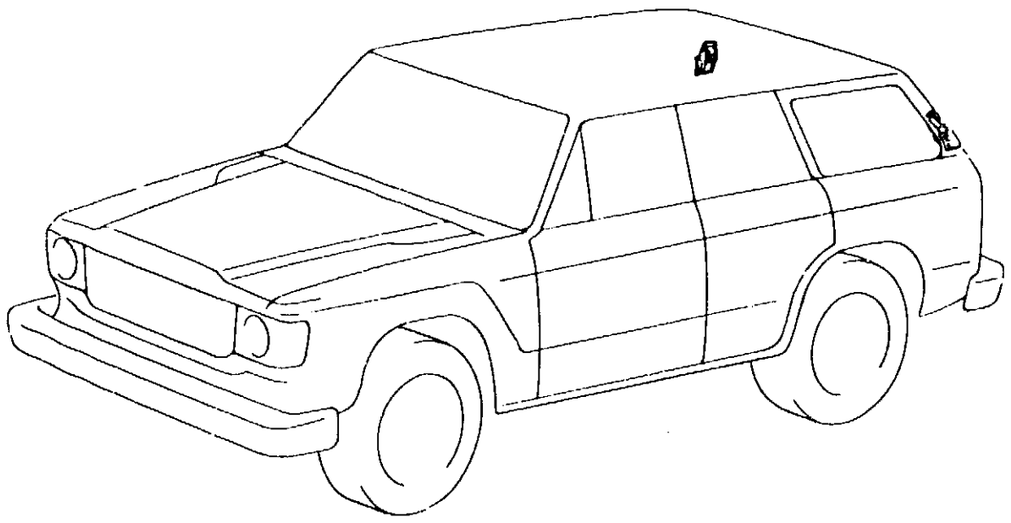

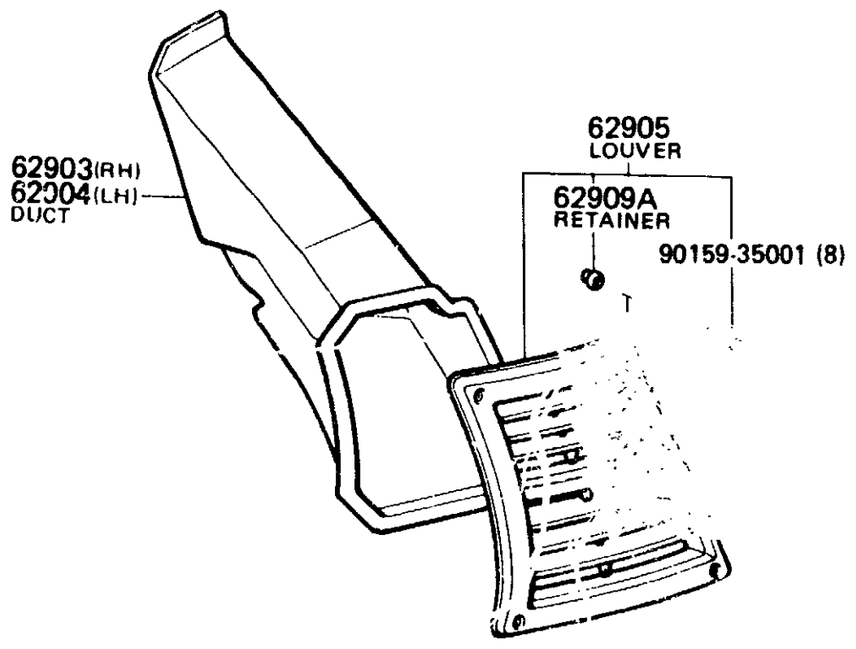

MB B654

PROD.DATE	MODELS	DESCRIPTION	R/P	PART NUMBER	QTY	REV.REF.CODE FROM	REV.REF.CODE UP TO
FIG.	61-55 REAR VENTILATOR & ROOF VENTILATOR						
	62903 DUCT SUB-ASSY, QUARTER VENTILATOR, RH						
8008-	BJ60,HJ60,FJ60			62903-90A00-	1	455	
	62904 DUCT SUB-ASSY, QUARTER VENTILATOR, LH						
8008-	BJ60,HJ60,FJ60			62904-90A00-	1	455	
	62905 LOUVER, QUARTER VENTILATION						
8008-	BJ60,HJ60,FJ60	RH		62905-69015-	1	455	
8008-	BJ60,HJ60,FJ60	LH		62906-69015-	1	455	
	62909A RETAINER SUB-ASSY, QUARTER VENTILATION LOUVER						
8008-	BJ60,HJ60,FJ60			62909-22010-	8	455	

(8008-8510); (8510-8604)FJ60

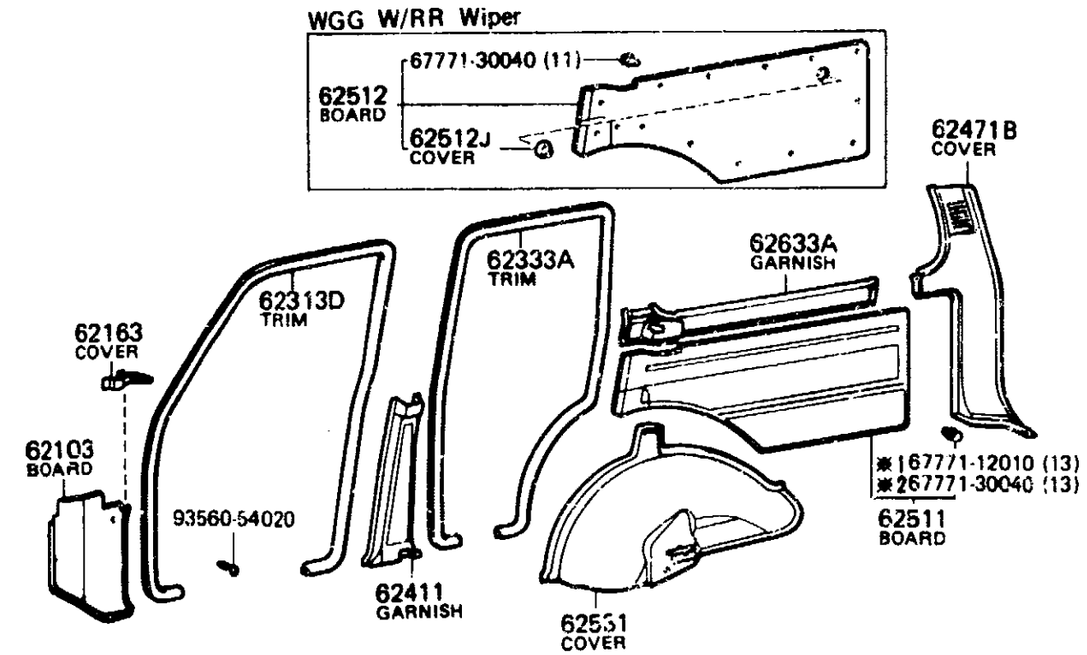

(8510-8604)HJ60; (8604-)

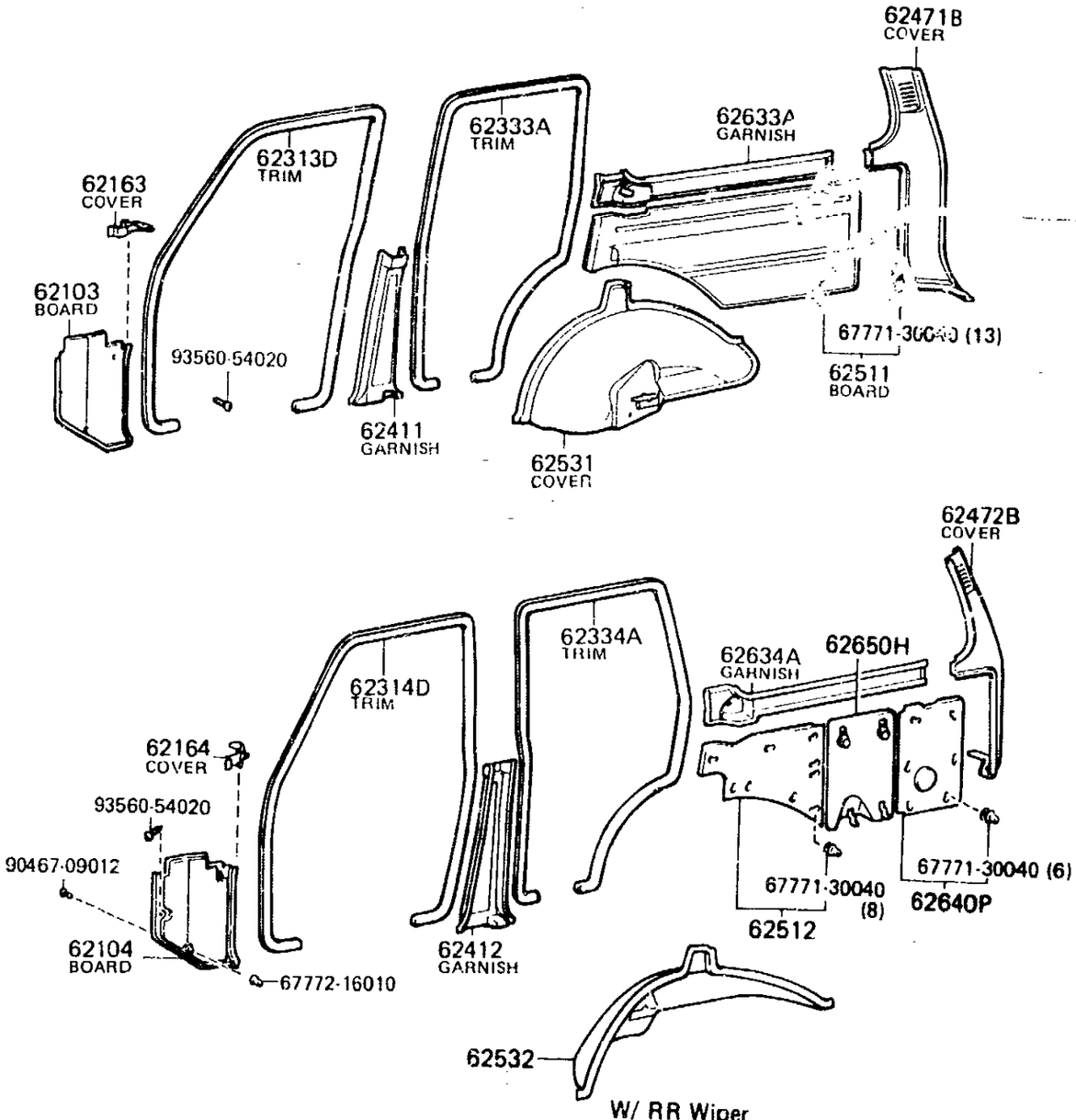

GENUINE TOYOTA PARTS

PROD.DATE	MODELS	DESCRIPTION	R/P	PART NUMBER	QTY	REV.REF.CODE FROM	REV.REF.CODE UP TO
FIG.	64-51 INSIDE TRIM BOARD						
	62103 BOARD SUB-ASSY, COWL SIDE TRIM, RH						
8411-8504	BJ60	SEPIA BROWN		62101-90A00-16	1	515	554
8008-8101	BJ60,FJ60		#	62101-90A01- (62101-90A00-)	1	455	
8101-8411	BJ60,FJ60	DARK BROWN		62101-90A00-06	1		514
8210-	BJ60,HJ60,FJ60	SHADOW GRAY		62101-90A00-03	1	467	
8504-	BJ60,HJ60,FJ60	SEPIA BROWN		62101-90A00-16	1	555	
8411-8504	FJ60	DARK BROWN		62101-90A00-06	1	515	554
	62104 BOARD SUB-ASSY, COWL SIDE TRIM, LH						
8411-8504	BJ60	SEPIA BROWN		62102-90A00-16	1	515	554
8008-8101	BJ60,FJ60		#	62102-90A02- (62102-90A00-)	1	455	
8101-8411	BJ60,FJ60	DARK BROWN		62102-90A00-06	1		514
8210-	BJ60,HJ60,FJ60	SHADOW GRAY		62102-90A00-03	1	467	
8504-	BJ60,HJ60,FJ60	SEPIA BROWN		62102-90A00-16	1	555	
8411-8504	FJ60	DARK BROWN		62102-90A00-06	1	515	554
	62163 COVER, COWL SIDE INSTRUMENT PANEL BRACKET, RH						
8411-8504	BJ60	SEPIA BROWN		62163-90A00-16	1	515	554
8008-8411	BJ60,FJ60	DARK BROWN		62163-90A00-06	1	455	514
8210-	BJ60,HJ60,FJ60	SHADOW GRAY		62163-90A00-03	1	467	
8504-	BJ60,HJ60,FJ60	SEPIA BROWN		62163-90A00-16	1	555	
8411-8504	FJ60	DARK BROWN		62163-90A00-06	1	515	554
	62164 COVER, COWL SIDE INSTRUMENT PANEL BRACKET, LH						
8411-8504	BJ60	SEPIA BROWN		62164-90A00-16	1	515	554
8008-8411	BJ60,FJ60	DARK BROWN		62164-90A00-06	1	455	514

GENUINE TOYOTA PARTS

PROD.DATE	MODELS	DESCRIPTION	R/P	PART NUMBER	QTY	REV.REF.CODE FROM	REV.REF.CODE UP TO
	62164 COVER, COWL SIDE INSTRUMENT PANEL BRACKET, LH CONTINUED						
8210-	BJ60,HJ60,FJ60	SHADOW GRAY		62164-90A00-03	1	467	
8504-	BJ60,HJ60,FJ60	SEPIA BROWN		62164-90A00-16	1	555	
8411-8504	FJ60	DARK BROWN		62164-90A00-06	1	515	554
	62313D TRIM, FRONT DOOR OPENING, RH						
8411-8504	BJ60	SEPIA BROWN		62313-90A00-16	1	515	554
8008-8411	BJ60,FJ60	DARK BROWN		62313-90A00-06	1	455	514
8210-	BJ60,HJ60,FJ60	SHADOW GRAY		62313-90A00-03	1	467	
8504-	BJ60,HJ60,FJ60	SEPIA BROWN		62313-90A00-16	1	555	
8411-8504	FJ60	DARK BROWN		62313-90A00-06	1	515	554
	62314D TRIM, FRONT DOOR OPENING, LH						
8411-8504	BJ60	SEPIA BROWN		62313-90A00-16	1	515	554
8008-8411	BJ60,FJ60	DARK BROWN		62313-90A00-06	1	455	514
8210-	BJ60,HJ60,FJ60	SHADOW GRAY		62313-90A00-03	1	467	
8504-	BJ60,HJ60,FJ60	SEPIA BROWN		62313-90A00-16	1	555	
8411-8504	FJ60	DARK BROWN		62313-90A00-06	1	515	554
	62333A TRIM, REAR DOOR OPENING, RH						
8411-8504	BJ60	SEPIA BROWN		62333-90A00-16	1	515	554
8008-8411	BJ60,FJ60	DARK BROWN		62333-90A00-06	1	455	514
8210-	BJ60,HJ60,FJ60	SHADOW GRAY		62333-90A00-03	1	467	
8504-	BJ60,HJ60,FJ60	SEPIA BROWN		62333-90A00-16	1	555	
8411-8504	FJ60	DARK BROWN		62333-90A00-06	1	515	554
	62334A TRIM, REAR DOOR OPENING, LH						
8411-8504	BJ60	SEPIA BROWN		62333-90A00-16	1	515	554

	PROD.DATE	MODELS	DESCRIPTION	R/P	PART NUMBER	QTY	REV.REF.CODE FROM	REV.REF.CODE UP TO
		62334A | TRIM, REAR DOOR OPENING, LH CONTINUED						
	8008-8411	BJ60,FJ60	DARK BROWN		62333-90A00-06	1	455	514
	8210-	BJ60,HJ60,FJ60	SHADOW GRAY		62333-90A00-03	1	467	
	8504-	BJ60,HJ60,FJ60	SEPIA BROWN		62333-90A00-16	1	555	
	8411-8504	FJ60	DARK BROWN		62333-90A00-06	1	515	554
		62411 | GARNISH, CENTER PILLAR, RH						
	8411-8504	BJ60	SEPIA BROWN		62411-90A01-16	1	515	554
	8008-8411	BJ60,FJ60	DARK BROWN		62411-90A01-06	1	455	514
	8210-	BJ60,HJ60,FJ60	SHADOW GRAY		62411-90A01-03	1	467	
	8504-	BJ60,HJ60,FJ60	SEPIA BROWN		62411-90A01-16	1	555	
	8411-8504	FJ60	DARK BROWN		62411-90A01-06	1	515	554
		62412 | GARNISH, CENTER PILLAR, LH						
	8411-8504	BJ60	SEPIA BROWN		62412-90A01-16	1	515	554
	8008-8411	BJ60,FJ60	DARK BROWN		62412-90A01-06	1	455	514
	8210-	BJ60,HJ60,FJ60	SHADOW GRAY		62412-90A01-03	1	467	
	8504-	BJ60,HJ60,FJ60	SEPIA BROWN		62412-90A01-16	1	555	
	8411-8504	FJ60	DARK BROWN		62412-90A01-06	1	515	554
		62471B | COVER, REAR PILLAR, RH						
	8411-8504	BJ60	IVORY		62471-90A00-18	1	515	554
	8110-8411	BJ60,FJ60	IVORY		62471-90A00-08	1	459	514
	8504-	BJ60,HJ60,FJ60	IVORY		62471-90A00-18	1	555	
C	8411-8504	FJ60	IVORY		62471-90A00-08	1	515	554
C	8008-8110	FJ60..WGG	IVORY			1	455	458
		62472B | COVER, REAR PILLAR, LH						
	8411-8504	BJ60	IVORY		62472-90A00-18	1	515	554
	8110-8411	BJ60,FJ60	IVORY		62472-90A00-08	1	459	514
	8504-	BJ60,HJ60,FJ60	IVORY		62472-90A00-18	1	555	
C	8411-8504	FJ60	IVORY		62472-90A00-08	1	515	554
C	8008-8110	FJ60..WGG	IVORY			1	455	458
		62511 | BOARD, QUARTER INSIDE TRIM, RH						
	8411-8504	BJ60	SHADOW GRAY		62510-90A15-03	1	515	554
	8411-8504	BJ60	SEPIA BROWN		62510-90A15-06	1	515	554
	8110-8210	BJ60,FJ60			62510-90A03-	1	459	466
	8210-8411	BJ60,FJ60	SHADOW GRAY		62510-90A06-03	1	467	514
	8210-8411	BJ60,FJ60	DARK BROWN		62510-90A06-06	1	467	514
	8008-8110	BJ60,FJ60..WGV			62510-90A02-	1	455	458
	8504-	BJ60,HJ60,FJ60	SHADOW GRAY		62510-90A15-03	1	555	
	8504-	BJ60,HJ60,FJ60	SEPIA BROWN		62510-90A15-06	1	555	
	8411-8504	FJ60	SHADOW GRAY		62510-90A06-03	1	515	554
	8411-8504	FJ60	DARK BROWN		62510-90A06-06	1	515	554
	8008-8110	FJ60..WGG			62510-90A03-	1	455	458
		62512 | BOARD, QUARTER INSIDE TRIM, LH						
	8411-8504	BJ60	W/O RR WIPER,SHADOW GRAY		62520-90A13-13	1	515	554
	8411-8504	BJ60	W/O RR WIPER,SEPIA BROWN		62520-90A13-16	1	515	554
	8411-8504	BJ60	W/RR WIPER,SHADOW GRAY		62520-90A33-03	1	515	554
	8411-8504	BJ60	W/RR WIPER,SEPIA BROWN		62520-90A33-06	1	515	554
	8110-8210	BJ60,FJ60	W/RR WIPER		62520-90A02-	1	459	466
	8110-8210	BJ60,FJ60	W/O RR WIPER		62520-90A05-	1	459	466

	PROD.DATE	MODELS	DESCRIPTION	R/P	PART NUMBER	QTY	REV.REF.CODE FROM	REV.REF.CODE UP TO
		62512 BOARD, QUARTER INSIDE TRIM, LH CONTINUED						
	8210-8411	BJ60,FJ60	W/RR WIPER,SHADOW GRAY		62520-90A11-03	1	467	514
	8210-8411	BJ60,FJ60	W/RR WIPER,DARK BROWN		62520-90A11-06	1	467	514
	8210-8411	BJ60,FJ60	W/O RR WIPER, SHADOW GRAY		62520-90A13-03	1	467	514
	8210-8411	BJ60,FJ60	W/RR WIPER,DARK BROWN		62520-90A13-06	1	467	514
C	8504-8604	BJ60,FJ60	W/O RR WIPER,SHADOW GRAY		62520-90A13-13	1	555	572
C	8504-8604	BJ60,FJ60	W/O RR WIPER,SEPIA BROWN		62520-90A13-16	1	555	572
C	8504-8604	BJ60,FJ60	W/RR WIPER,SHADOW GRAY		62520-90A33-03	1	555	572
C	8504-8604	BJ60,FJ60	W/RR WIPER,SEPIA BROWN		62520-90A33-06	1	555	572
	8008-8110	BJ60,FJ60••WGV	W/O RR WIPER		62520-90A04-	1	455	458
	8008-8110	BJ60,FJ60••WGV	W/RR WIPER		62520-90A06-	1	455	458
	8411-8504	FJ60	W/RR WIPER,SHADOW GRAY		62520-90A11-03	1	515	554
	8411-8504	FJ60	W/RR WIPER,DARK BROWN		62520-90A11-06	1	515	554
	8411-8504	FJ60	W/O RR WIPER,SHADOW GRAY		62520-90A13-03	1	515	554
	8411-8504	FJ60	W/O RR WIPER,DARK BROWN		62520-90A13-06	1	515	554
C	8604-	FJ60	SHADOW GRAY		62520-90A46-03	1	573	
C	8604-	FJ60	SEPIA BROWN		62520-90A46-06	1	573	
	8008-8110	FJ60••WGG	W/RR WIPER		62520-90A02-	1	455	458

PROD.DATE	MODELS	DESCRIPTION	R/P	PART NUMBER	QTY	REV.REF.CODE FROM	REV.REF.CODE UP TO
	62512 BOARD, QUARTER INSIDE TRIM, LH CONTINUED						
8008-8110	FJ60••WGG	W/O RR WIPER		62520-90A05-	1	455	458
8510-	HJ60	SHADOW GRAY		62520-90A46-03	1	567	
8510-	HJ60	SEPIA BROWN		62520-90A46-06	1	567	
	62512J COVER, QUARTER TRIM WASHER						
8411-8504	BJ60	W/RR WIPER,SEPIA BROWN		62605-90A00-16	1	515	554
8008-8411	BJ60,FJ60	W/RR WIPER,DARK BROWN		62605-90A00-06	1	455	514
8210-	BJ60,HJ60,FJ60	W/RR WIPER,SHADOW GRAY		62605-90A00-03	1	467	
8504-	BJ60,HJ60,FJ60	W/RR WIPER,SEPIA BROWN		62605-90A00-16	1	555	
8411-8504	FJ60	W/RR WIPER,DARK BROWN		62605-90A00-06	1	515	554
	62531 COVER, WHEEL HOUSE TRIM, RH						
8411-8504	BJ60	SHADOW GRAY		62613-90A07-03	1	515	554
8411-8504	BJ60	SEPIA BROWN		62613-90A07-06	1	515	554
8008-8411	BJ60,FJ60	DARK BROWN		62613-90A01-06	1	455	514
8210-8411	BJ60,FJ60	SHADOW GRAY		62613-90A01-03	1	467	514
8504-	BJ60,HJ60,FJ60	SHADOW GRAY		62613-90A07-03	1	555	
8504-	BJ60,HJ60,FJ60	SEPIA BROWN		62613-90A07-06	1	555	
8411-8504	FJ60	SHADOW GRAY		62613-90A01-03	1	515	554
8411-8504	FJ60	DARK BROWN		62613-90A01-06	1	515	554
	62532 COVER, WHEEL HOUSE TRIM, LH						
8411-8504	BJ60	SEPIA BROWN		62614-90A00-16	1	515	554

GENUINE TOYOTA PARTS

	PROD.DATE	MODELS	DESCRIPTION	R/P	PART NUMBER	QTY	REV.REF.CODE FROM	REV.REF.CODE UP TO
		62532 COVER, WHEEL HOUSE TRIM, LH CONTINUED						
	8008-8411	BJ60,FJ60	DARK BROWN		62614-90A00-06	1	455	514
	8210-	BJ60,HJ60,FJ60	SHADOW GRAY		62614-90A00-03	1	467	
	8504-	BJ60,HJ60,FJ60	SEPIA BROWN		62614-90A00-16	1	555	
	8411-8504	FJ60	DARK BROWN		62614-90A00-06	1	515	554
		62633A GARNISH, QUARTER TRIM, RH						
	8411-8504	BJ60	IVORY		62633-90A03-18	1	515	554
	8110-8210	BJ60,FJ60			62633-90A00-	1	515	554
	8210-8411	BJ60,FJ60	IVORY		62633-90A03-08	1	467	514
C	8504-8604	BJ60,FJ60	IVORY		62633-90A03-18	1	555	572
	8411-8504	FJ60	IVORY		62633-90A03-08	1	515	554
C	8604-	FJ60	IVORY		62633-90A09-08	1	573	
	8008-8110	FJ60..WGG			62633-90A00-	1	455	458
	8510-	HJ60	IVORY		62633-90A09-08	1	567	
		62634A GARNISH, QUARTER TRIM, LH						
	8411-8504	BJ60	IVORY		62634-90A03-18	1	515	554
	8110-8210	BJ60,FJ60			62634-90A00-	1	515	554
	8210-8411	BJ60,FJ60	IVORY		62634-90A03-08	1	467	514
C	8504-8604	BJ60,FJ60	IVORY		62634-90A03-18	1	555	572
	8411-8504	FJ60	IVORY		62634-90A03-08	1	515	554
C	8604-	FJ60	IVORY		62634-90A09-08	1	573	
	8008-8110	FJ60..WGG			62634-90A00-	1	455	458
	8510-	HJ60	IVORY		62634-90A09-08	1	567	
		62640P PANEL ASSY, QUARTER TRIM, REAR LH						
C	8604-	FJ60	W/RR WIPER,SHADOW GRAY		62640-90A02-03	1	573	
C	8604-	FJ60	W/RR WIPER,SEPIA BROWN		62640-90A02-06	1	573	
C	8604-	FJ60	SHADOW GRAY		62640-90A03-03	1	573	
		62640P PANEL ASSY, QUARTER TRIM, REAR LH CONTINUED						
C	8604-	FJ60	SEPIA BROWN		62640-90A03-06	1	573	
	8510-	HJ60	W/RR WIPER,SHADOW GRAY		62640-90A02-03	1	567	
	8510-	HJ60	W/RR WIPER,SEPIA BROWN		62640-90A02-06	1	567	
	8510-	HJ60	SHADOW GRAY		62640-90A03-03	1	567	
	8510-	HJ60	SEPIA BROWN		62640-90A03-06	1	567	
		62650H PANEL ASSY, QUARTER TRIM, CENTER						
C	8604-	FJ60	SHADOW GRAY		62650-90A01-03	1	573	
C	8604-	FJ60	SEPIA BROWN		62650-90A01-06	1	573	
	8510-	HJ60	SHADOW GRAY		62650-90A01-03	1	567	
	8510-	HJ60	SEPIA BROWN		62650-90A01-06	1	567	

GENUINE TOYOTA PARTS

(8008-)

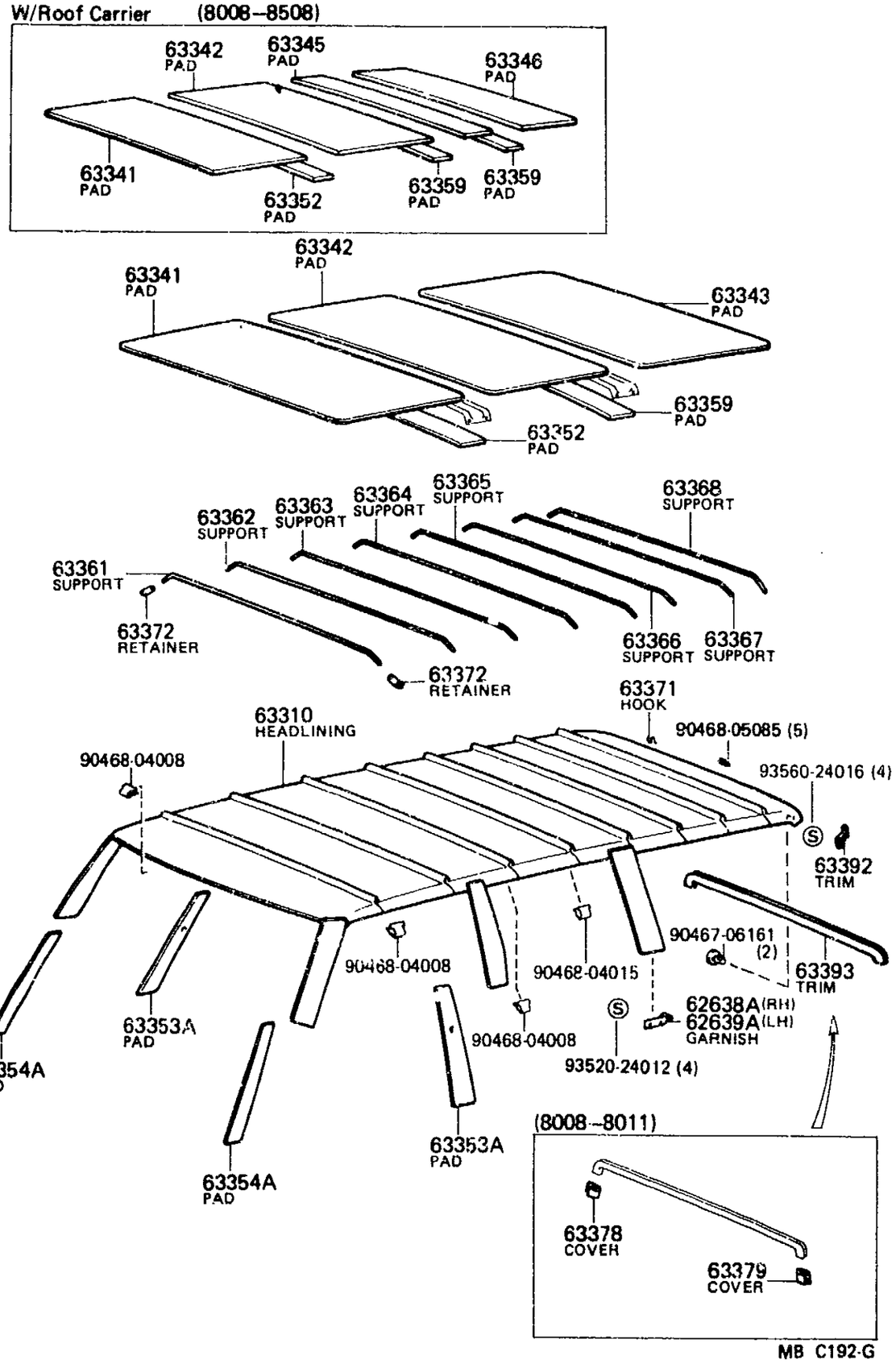

	PROD.DATE	MODELS	DESCRIPTION	R/P	PART NUMBER	QTY	REV.REF.CODE FROM	REV.REF.CODE UP TO
	FIG.	64-52 ROOF HEADLINING & SILENCER PAD						
		62638A	GARNISH, QUARTER PILLAR, RH					
	8008-8110	BJ60,FJ60..WGV			# 62638-90A00- (62638-90A00-08)	1	455	458
		62639A	GARNISH, QUARTER PILLAR, LH					
	8008-8110	BJ60,FJ60..WGV	IVORY		62639-90A00-08	1	455	458
		63310	HEADLINING ASSY, ROOF					
	8411-8504	BJ60	IVORY		63310-90A01-18	1	515	554
	8008-8411	BJ60,FJ60	IVORY		# 63310-90A01-08 (63310-90A01-18)	1	455	514
C	8504-8604	BJ60,FJ60	IVORY		63310-90A01-18	1	555	572
	8411-8504	FJ60	IVORY		# 63310-90A01-08 (63310-90A01-18)	1	515	554
C	8604-	FJ60	IVORY		63310-90A11-08	1	573	
	8510-	HJ60	IVORY		63310-90A07-08	1	567	
		63341	PAD, ROOF SILENCER, NO.1					
	8008-	BJ60,HJ60,FJ60			63341-90A01-	1	455	
		63342	PAD, ROOF SILENCER, NO.2					
	8008-8110	BJ60,FJ60			# 63342-90A01- (63341-90A01-)	1	455	458
	8110--	BJ60,HJ60,FJ60			63341-90A01-	1	459	
		63343	PAD, ROOF SILENCER, NO.3					
	8008-8110	BJ60,FJ60	W/O ROOF CARRIER		63341-90A01-	1	455	458
	8110-	BJ60,HJ60,FJ60	W/O ROOF CARRIER			1	459	
		63345	PAD, ROOF SILENCER, NO.5					
	8010-8508	BJ60,FJ60	W/ROOF CARRIER		63345-90A01-	1		
		63346	PAD, ROOF SILENCER, NO.6					
	8010-8508	BJ60,FJ60	W/ROOF CARRIER		63346-90A01-	1		

GENUINE TOYOTA PARTS

PROD.DATE	MODELS	DESCRIPTION	R/P	PART NUMBER	QTY	REV.REF.CODE FROM	REV.REF.CODE UP TO
	63352 PAD, ROOF	HEADLINING, CENTER					
8210-	BJ60,HJ60,FJ60			63343-90A01-	2	467	
	63353A PAD, ROOF	HEADLINING CENTER PILLAR					
8008-	BJ60,HJ60,FJ60			63353-90A00-	2	455	
	63354A PAD, ROOF	HEADLINING FRONT PILLAR					
8008-	BJ60,HJ60,FJ60			63354-90A00-	2	455	
	63359 PAD, ROOF	HEADLINING END					
8210-	BJ60,HJ60,FJ60			63344-90A01-	1	467	
8210-8508	FJ60	W/ROOF CARRIER			2	467	
	63361 SUPPORT,	ROOF HEADLINING, NO.1					
8008-	BJ60,HJ60,FJ60	MARK=BLUE,L=1154.5		63361-90A00-	1	455	
8008-	BJ60,HJ60,FJ60	MARK=RED,L=1157.5		63361-90A01-	1	455	
8008-	BJ60,HJ60,FJ60	MARK=YELLOW,L=1160.5		63361-90A02-	1	455	
	63362 SUPPORT,	ROOF HEADLINING, NO.2					
8008-	BJ60,HJ60,FJ60	MARK=BLUE,L=1154.5		63361-90A00-	1	455	
8008-	BJ60,HJ60,FJ60	MARK=RED,L=1157.5		63361-90A01-	1	455	
8008-	BJ60,HJ60,FJ60	MARK=YELLOW,L=1160.5		63361-90A02-	1	455	
	63363 SUPPORT,	ROOF HEADLINING, NO.3					
8008-	BJ60,HJ60,FJ60	MARK=BLUE,L=1154.5		63361-90A00-	1	455	
8008-	BJ60,HJ60,FJ60	MARK=RED,L=1157.5		63361-90A01-	1	455	
8008-	BJ60,HJ60,FJ60	MARK=YELLOW,L=1160.5		63361-90A02-	1	455	
	63364 SUPPORT,	ROOF HEADLINING, NO.4					
8008-	BJ60,HJ60,FJ60	MARK=BLUE,L=1154.5		63361-90A00-	1	455	
	63364 SUPPORT, CONTINUED	ROOF HEADLINING, NO.4					
8008-	BJ60,HJ60,FJ60	MARK=RED,L=1157.5		63361-90A01-	1	455	
8008-	BJ60,HJ60,FJ60	MARK=YELLOW,L=1160.5		63361-90A02-	1	455	
	63365 SUPPORT,	ROOF HEADLINING, NO.5					
8008-	BJ60,HJ60,FJ60	MARK=BLUE,L=1154.5		63361-90A00-	1	455	
8008-	BJ60,HJ60,FJ60	MARK=RED,L=1157.5		63361-90A01-	1	455	
8008-	BJ60,HJ60,FJ60	MARK=YELLOW,L=1160.5		63361-90A02-	1	455	
	63366 SUPPORT,	ROOF HEADLINING, NO.6					
8008-	BJ60,HJ60,FJ60	MARK=BLUE,L=1149		63362-90A00-	1	455	
8008-	BJ60,HJ60,FJ60	MARK=RED,L=1152		63362-90A01-	1	455	
8008-	BJ60,HJ60,FJ60	MARK=YELLOW,L=1155		63362-90A02-	1	455	
	63367 SUPPORT,	ROOF HEADLINING, NO.7					
8008-	BJ60,HJ60,FJ60	MARK=BLUE,L=1149		63362-90A00-	1	455	
8008-	BJ60,HJ60,FJ60	MARK=RED,L=1152		63362-90A01-	1	455	
8008-	BJ60,HJ60,FJ60	MARK=YELLOW,L=1155		63362-90A02-	1	455	
	63368 SUPPORT,	ROOF HEADLINING, NO.8					
8008-	BJ60,HJ60,FJ60	MARK=BLUE,L=1112		63363-90A00-	1	455	
8008-	BJ60,HJ60,FJ60	MARK=RED,L=1115		63363-90A01-	1	455	
8008-	BJ60,HJ60,FJ60	MARK=YELLOW,L=1118		63363-90A02-	1	455	
	63371 HOOK,	ROOF HEADLINING SUPPORT					
8008-	BJ60,HJ60,FJ60			63372-90A00-	3	455	

PROD.DATE	MODELS	DESCRIPTION	R/P	PART NUMBER	QTY	REV.REF.CODE FROM	REV.REF.CODE UP TO
	63372 RETAINER, HEADLINING SUPPORT						
8008-	BJ60,HJ60,FJ60			63371-30050-	16	455	
	63378 COVER, ROOF HEADLINING REAR TRIM, RH						
8008-8011	BJ60,FJ60			63378-90A00-	1	455	
	63379 COVER, ROOF HEADLINING REAR TRIM, LH						
8008-8011	BJ60,FJ60			63379-90A00-	1	455	
	63392 TRIM, ROOF HEADLINING, REAR						
8411-8504	BJ60	RH,IVORY		63392-90A00-18	1	515	554
8411-8504	BJ60	LH,IVORY		63397-90A00-18	1	515	554
8008-8411	BJ60,FJ60	RH,IVORY		63392-90A00-08	1	455	514
8008-8411	BJ60,FJ60	LH,IVORY		63397-90A00-08	1	455	514
8504-	BJ60,HJ60,FJ60	RH,IVORY		63392-90A00-18	1	555	
8504-	BJ60,HJ60,FJ60	LH,IVORY		63397-90A00-18	1	555	
8411-8504	FJ60	RH,IVORY		63392-90A00-08	1	515	554
8411-8504	FJ60	LH,IVORY		63397-90A00-08	1	515	554
	63393 TRIM, ROOF HEADLINING, CENTER						
8411-8504	BJ60	IVORY		63396-90A00-18	1	515	554
8008-8411	BJ60,FJ60	IVORY		63396-90A00-08	1	455	514
8504-	BJ60,HJ60,FJ60	IVORY		63396-90A00-18	1	555	
8411-8504	FJ60	IVORY		63396-90A00-08	1	515	554

PROD.DATE	MODELS	DESCRIPTION	R/P	PART NUMBER	QTY	REV.REF.CODE FROM	REV.REF.CODE UP TO

FIG.67-51 FRONT DOOR PANEL & GLASS

3-J5

MR4-11-0470

(8008-)

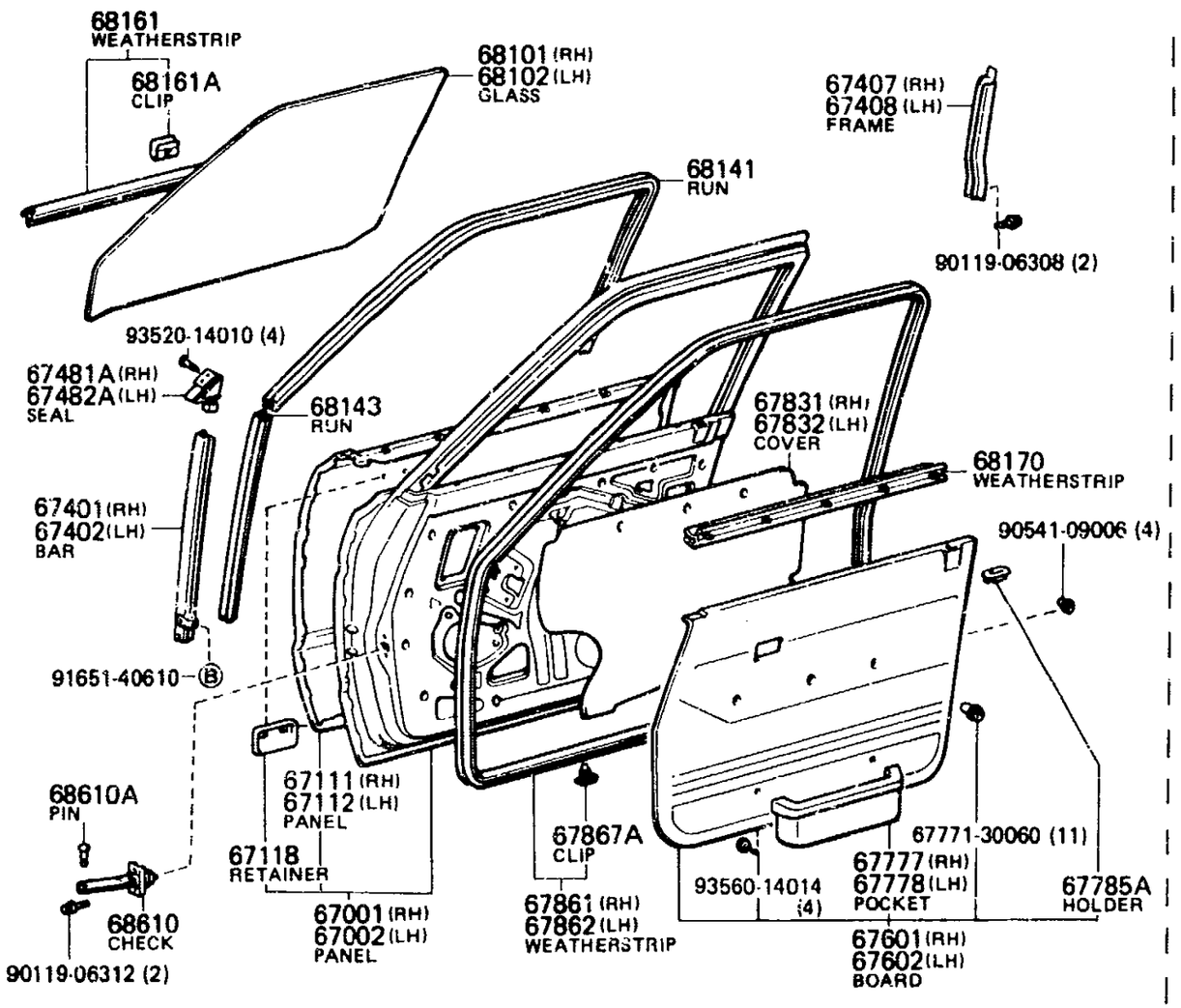

(8008-)

WGV (W/Speaker) (8008–8110)

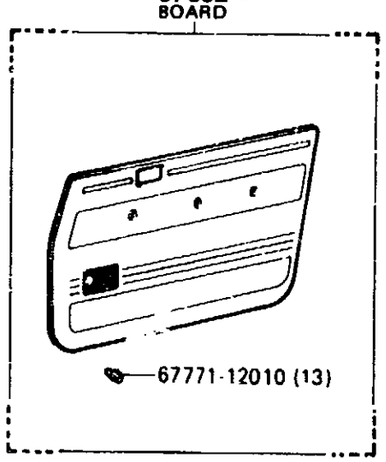

WGV (W/O Speaker) (8008–8110)

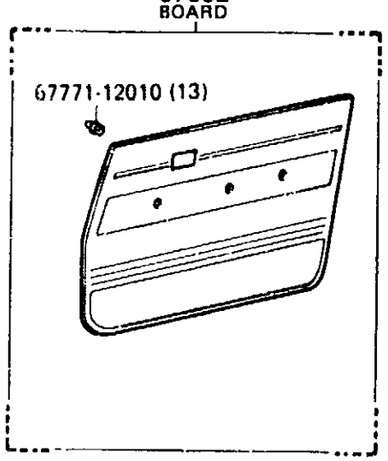

WGG (W/Speaker) (8008–8510)

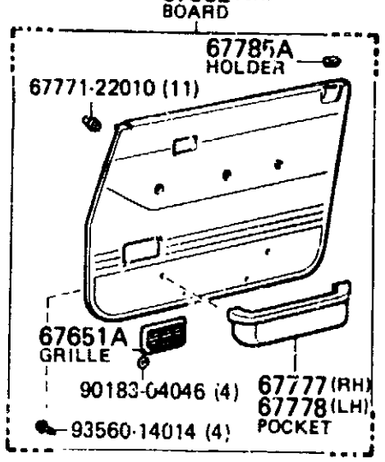

MR K230-A

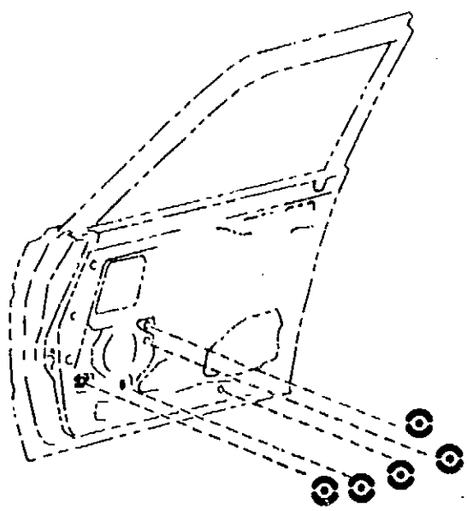

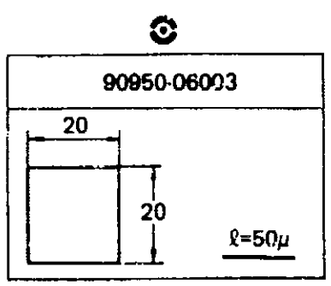

MB B737-F

MBB737F

MBK230A

	PROD.DATE	MODELS	DESCRIPTION	R/P	PART NUMBER	QTY	REV.REF.CODE FROM	REV.REF.CODE UP TO
	FIG.	67-51 FRONT DOOR PANEL & GLASS						
		67001 PANEL SUB-ASSY, FRONT DOOR, RH						
	8008-8309	BJ60,FJ60		#	67001-90A04-	1	455	486
				┌(	67001-90A45-	)		
				•(	68160-90A02-	)		
				•(	75710-90A02-	)		
	8309-8409	BJ60,FJ60		#	67001-90A12-	1	487	536
				(	67001-90A20-	)		
C	8409-8604	BJ60,FJ60		#	67001-90A20-	1	537	572
				(	67001-90A31-	)		
C	8604-	FJ60			67001-90A44-	1	573	
	8510-8601	HJ60		#	67001-90A31-	1	567	576
				┌(	67001-90A44-	)		
				•(	68160-90A02-	)		
				•(	75710-90A02-	)		
	8601-	HJ60			67001-90A44-	1	577	
		67002 PANEL SUB-ASSY, FRONT DOOR, LH						
	8008-8309	BJ60		#	67002-90A04-	1	455	486
				┌(	67002-90A20-	)		
				•(	67832-90A02-	)		
	8309-8409	BJ60			67002-90A14-	1	487	536
	8409-8510	BJ60		#	67002-90A29-	1	537	566
				(	67002-90A34-	)		
	8008-8309	FJ60		#	67002-90A09-	1	455	486
				┌(	67002-90A24-	)		
				•(	67832-90A02-	)		
	8309-8409	FJ60			67002-90A19-	1	487	536
C	8601-8604	FJ60		#	67002-90A34-	1	577	572
				┌(	67002-90A47-	)		
				•(	68210-90A02-	)		
				•(	75720-90A02-	)		
C	8604-	FJ60			67002-90A47-	1	573	
	8601-	HJ60				1	577	
C	8409-8601	HJ60,FJ60		#	67002-90A34-	1	537	576
				┌(	67002-90A47-	)		
				•(	68210-90A02-	)		
				•(	75720-90A02-	)		
		67111 PANEL, FRONT DOOR, OUTER RH						
	8008-8601	BJ60,HJ60,FJ60		*	67111-90A05-	1	455	576
C	8601-	HJ60,FJ60			67111-90A15-	1	577	

	PROD.DATE	MODELS	DESCRIPTION	R/P	PART NUMBER	QTY	REV.REF.CODE FROM	REV.REF.CODE UP TO
		67112 PANEL, FRONT DOOR, OUTER LH						
	8008-8601	BJ60,HJ60,FJ60		*	67112-90A05-	1	455	576
C	8601-	HJ60,FJ60			67112-90A15-	1	577	
		67118 RETAINER, OUTER MIRROR						
C	8008-8604	BJ60,FJ60			67118-90A00-	2	455	572
C	8604-	FJ60			67118-90A02-	2	573	
	8510-	HJ60				2	567	
		67401 BAR SUB-ASSY, FRONT DOOR WINDOW FRONT, RH						
	8008-	BJ60,HJ60,FJ60			67401-90A00-	1	455	
		67402 BAR SUB-ASSY, FRONT DOOR WINDOW FRONT, LH						
	8008-	BJ60,HJ60,FJ60			67402-90A00-	1	455	
		67407 FRAME SUB-ASSY, FRONT DOOR REAR LOWER, RH						
	8008-8409	BJ60,FJ60			67433-90A00-	1	455	
	8409-	BJ60,HJ60,FJ60			67403-90A00-	1		
		67408 FRAME SUB-ASSY, FRONT DOOR REAR LOWER, LH						
	8008-8409	BJ60,FJ60			67434-90A00-	1	455	
	8409-	BJ60,HJ60,FJ60			67404-90A00-	1		
		67481A SEAL, FRONT DOOR FRONT LOWER FRAME, RH						
	8008-	BJ60,HJ60,FJ60			67481-90A00-	1	455	
		67482A SEAL, FRONT DOOR FRONT LOWER FRAME, LH						
	8008-	BJ60,HJ60,FJ60			67482-90A00-	1	455	
		67601 BOARD SUB-ASSY, FRONT DOOR TRIM, RH						
	8411-8504	BJ60	W/SPEAKER, SHADOW GRAY		67610-90A57-03	1	515	554
	8411-8504	BJ60	W/SPEAKER, SEPIA BROWN		67610-90A57-06	1	515	554
	8110-8411	BJ60,FJ60	W/SPEAKER, DARK BROWN		67610-90A09-06	1	459	514

GENUINE TOYOTA PARTS

	PROD.DATE	MODELS	DESCRIPTION	R/P	PART NUMBER	QTY	REV.REF.CODE FROM	REV.REF.CODE UP TO
		+--------+						
		| 67601 | BOARD SUB-CONTINUED	ASSY, FRONT DOOR TRIM, RH					
	8210-8411	BJ60,FJ60	W/O SPEAKER,SHADOW GRAY		67610-90A03-03	1	467	514
	8210-8411	BJ60,FJ60	W/SPEAKER,SHADOW GRAY		67610-90A09-03	1	467	514
C	8504-8604	BJ60,FJ60	W/SPEAKER,SHADOW GRAY		67610-90A57-03	1	555	572
C	8504-8604	BJ60,FJ60	W/SPEAKER,SEPIA BROWN		67610-90A57-06	1	555	572
	8008-8110	BJ60,FJ60,,WGV	W/O SPEAKER,DARK BROWN		67610-90A02-06	1	455	458
	8008-8110	BJ60,FJ60,,WGV	W/SPEAKER,DARK BROWN		67610-90A08-06	1	455	458
C	8504-8608	BJ60,HJ60,FJ60	SHADOW GRAY		67610-90A53-03	1	555	600
C	8504-8608	BJ60,HJ60,FJ60	SEPIA BROWN		67610-90A53-06	1	555	600
	8411-8504	FJ60	W/O SPEAKER,SHADOW GRAY		67610-90A03-03	1	515	554
	8411-8504	FJ60	W/SPEAKER,SHADOW GRAY		67610-90A09-03	1	515	554
	8411-8504	FJ60	W/SPEAKER,DARK BROWN		67610-90A09-06	1	515	554
C	8604-8608	FJ60	W/SPEAKER,SHADOW GRAY		67610-90A70-03	1	573	600
C	8604-8608	FJ60	W/SPEAKER,SEPIA BROWN		67610-90A70-06	1	573	600
C	8608-	FJ60	SHADOW GRAY		67610-90G01-03	1	601	
C	8608-	FJ60	SEPIA BROWN		67610-90G01-06	1	601	
	8008-8110	FJ60,,WGG	W/SPEAKER,DARK BROWN		67610-90A09-06	1	455	458
	8008-8504	FJ60,,WGG	W/O SPEAKER,DARK BROWN		67610-90A03-06	1	455	514

	PROD.DATE	MODELS	DESCRIPTION	R/P	PART NUMBER	QTY	REV.REF.CODE FROM	REV.REF.CODE UP TO
		+--------+						
		| 67601 | BOARD SUB-CONTINUED	ASSY, FRONT DOOR TRIM, RH					
C	8608-	HJ60,FJ60	W/SPEAKER,SHADOW GRAY		67610-90G04-03	1	601	
C	8608-	HJ60,FJ60	W/SPEAKER,SEPIA BROWN		67610-90G04-06	1	601	
		+--------+						
		| 67602 | BOARD SUB-	ASSY, FRONT DOOR TRIM, LH					
	8411-8504	BJ60	W/SPEAKER,SHADOW GRAY		67620-90A53-03	1	515	554
	8411-8504	BJ60	W/SPEAKER,SEPIA BROWN		67620-90A53-06	1	515	554
	8110-8411	BJ60,FJ60	W/SPEAKER,DARK BROWN		67620-90A09-06	1	459	514
	8210-8411	BJ60,FJ60	W/O SPEAKER,SHADOW GRAY		67620-90A03-03	1	467	514
	8210-8411	BJ60,FJ60	W/SPEAKER,SHADOW GRAY		67620-90A09-03	1	467	514
C	8504-8604	BJ60,FJ60	W/SPEAKER,SHADOW GRAY		67620-90A53-03	1	555	572
C	8504-8604	BJ60,FJ60	W/SPEAKER,SEPIA BROWN		67620-90A53-06	1	555	572
	8008-8110	BJ60,FJ60,,WGV	W/O SPEAKER,DARK BROWN		67620-90A02-06	1	455	458
	8008-8110	BJ60,FJ60,,WGV	W/SPEAKER,DARK BROWN		67620-90A08-06	1	455	458
	8504-8511	BJ60,HJ60,FJ60	SHADOW GRAY		67620-90A49-03 (67620-90A03-03)	1	555	
C	8504-8608	BJ60,HJ60,FJ60	SEPIA BROWN		67620-90A49-06	1	555	600
	8411-8504	FJ60	W/O SPEAKER,SHADOW GRAY		67620-90A03-03	1	515	554
	8411-8504	FJ60	W/SPEAKER,SHADOW GRAY		67620-90A09-03	1	515	554
	8411-8504	FJ60	W/SPEAKER,DARK BROWN		67620-90A09-06	1	515	554

GENUINE TOYOTA PARTS

	PROD.DATE	MODELS	DESCRIPTION	R/P	PART NUMBER	QTY	REV.REF.CODE FROM	REV.REF.CODE UP TO
		67602 BOARD SUB-ASSY, FRONT DOOR TRIM, LH						
		CONTINUED						
C	8604-8608	FJ60	W/SPEAKER, SHADOW GRAY		67620-90A81-03	1	573	600
C	8604-8608	FJ60	W/SPEAKER, SEPIA BROWN		67620-90A81-06	1	573	600
C	8608-	FJ60	SEPIA BROWN		67620-90G04-06	1	601	
	8008-8110	FJ60••WGG	W/SPEAKER, DARK BROWN		67620-90A09-06	1	455	458
	8008-8504	FJ60••WGG	W/O SPEAKER, DARK BROWN		67620-90A03-06	1	455	554
C	8608-	HJ60,FJ60	W/SPEAKER, SHADOW GRAY		67620-90G07-03	1	601	
C	8608-	HJ60,FJ60	W/SPEAKER, SEPIA BROWN		67620-90G07-06	1	601	
		67651A GRILLE, SPEAKER DOOR						
	8411-8504	BJ60	SEPIA BROWN		67651-90A00-16	2	515	554
	8110-8411	BJ60,FJ60	DARK BROWN		67651-90A00-06	2	459	514
C	8210-8604	BJ60,FJ60	SHADOW GRAY		67651-90A00-03	2	467	572
C	8504-8604	BJ60,FJ60	SEPIA BROWN		67651-90A00-16	2	555	572
	8411-8504	FJ60	DARK BROWN		67651-90A00-06	2	515	554
	8008-8110	FJ60••WGG	DARK BROWN			2	455	458
C	8604-	HJ60,FJ60	SHADOW GRAY		67651-90A01-03	2	573	
C	8604-	HJ60,FJ60	SEPIA BROWN		67651-90A01-06	2	573	
		67777 POCKET, FRONT DOOR TRIM, RH						
	8411-8504	BJ60	BROWN		67777-22040-36	1	515	554
	8110-8411	BJ60,FJ60	DARK BROWN		67777-22040-16	1	459	514
	8210-	BJ60,HJ60,FJ60	SHADOW GRAY		67777-22040-23	1	467	
	8504-	BJ60,HJ60,FJ60	BROWN		67777-22040-36	1	555	

	PROD.DATE	MODELS	DESCRIPTION	R/P	PART NUMBER	QTY	REV.REF.CODE FROM	REV.REF.CODE UP TO
		67777 POCKET, FRONT DOOR TRIM, RH						
		CONTINUED						
	8411-8504	FJ60	DARK BROWN		67777-22040-16	1	515	554
	8008-8110	FJ60••WGG	DARK BROWN			1	455	458
		67778 POCKET, FRONT DOOR TRIM, LH						
	8411-8504	BJ60	BROWN		67778-22030-46	1	515	554
	8110-8504	BJ60,FJ60	DARK BROWN		67778-22030-16	1	459	554
	8210-	BJ60,HJ60,FJ60	SHADOW GRAY		67778-22030-23	1	467	
	8504-	BJ60,HJ60,FJ60	BROWN		67778-22030-46	1	555	
	8411-8504	FJ60	DARK BROWN		67778-22030-16	1	515	554
	8008-8110	FJ60••WGG	DARK BROWN			1	455	458
		67785A HOLDER, DOOR LOCKING BUTTON COLLAR (FOR FRONT DOOR)						
	8110-	BJ60,HJ60,FJ60			69751-20040-	2	459	
	8008-8110	FJ60••WGG				2	455	458
		67831 COVER, FRONT DOOR SERVICE HOLE, RH						
C	8411-8504	BJ60	W/SPEAKER		67832-90A05-	1	515	554
	8008-8110	BJ60,FJ60	W/O SPEAKER	#	67831-90A02- (67832-90A02-)	1	455	458
	8008-8309	BJ60,FJ60	W/SPEAKER	#	67831-90A03- (67832-90A03-)	1	455	486
	8309-8408	BJ60,FJ60	W/SPEAKER	#	67832-90A03- (67832-90A05-)	1	487	
	8408-8411	BJ60,FJ60	W/SPEAKER		67832-90A05-	1		514
C	8504-	BJ60,HJ60,FJ60	W/SPEAKER			1	555	
	8110-8309	FJ60	W/O SPEAKER	#	67831-90A02- (67832-90A02-)	1	459	486
	8309-8408	FJ60	W/O SPEAKER		67832-90A02-	1	487	
	8408-8504	FJ60	W/O SPEAKER		67832-90A04-	1		554
C	8411-8504	FJ60	W/SPEAKER		67832-90A05-	1	515	554
	8504-	FJ60	W/O SPEAKER		67832-90A02-	1	555	

	PROD.DATE	MODELS	DESCRIPTION	R/P	PART NUMBER	QTY	REV.REF.CODE FROM	REV.REF.CODE UP TO
		67832 COVER, FRONT DOOR SERVICE HOLE, LH						
C	8411-8504	BJ60	W/SPEAKER		67832-90A05-	1	515	554
	8008-8110	BJ60,FJ60	W/O SPEAKER	#	67831-90A02- (67832-90A02-)	1	455	458
	8008-8309	BJ60,FJ60	W/SPEAKER	#	67831-90A03- (67832-90A03-)	1	455	486
	8309-8408	BJ60,FJ60	W/SPEAKER	#	67832-90A03- (67832-90A05-)	1	487	
	8408-8411	BJ60,FJ60	W/SPEAKER		67832-90A05-	1		514
C	8504-	BJ60,HJ60,FJ60	W/SPEAKER			1	555	
	8110-8309	FJ60	W/O SPEAKER	#	67831-90A02- 67832-90A02-)	1	459	486
	8309-8408	FJ60	W/O SPEAKER		67832-90A02-	1	487	
	8408-8504	FJ60	W/O SPEAKER		67832-90A04-	1		554
C	8411-8504	FJ60	W/SPEAKER		67832-90A05-	1	515	554
	8504-	FJ60	W/O SPEAKER		67832-90A02-	1	555	
		67861 WEATHERSTRIP, FRONT DOOR, RH						
	8008-	BJ60,HJ60,FJ60			67861-90A00-	1	455	
		67862 WEATHERSTRIP, FRONT DOOR, LH						
	8008-	BJ60,HJ60,FJ60			67862-90A00-	1	455	
		67867A CLIP, DOOR WEATHERSTRIP (FOR FRONT DOOR)						
	8008-	BJ60,HJ60,FJ60			67868-30040-	44	455	
		68101 GLASS SUB-ASSY, FRONT DOOR, RH						
	8110-8201	BJ60	*TEM,T=4.0		68111-90A00-	1	459	
	8008-8110	BJ60,FJ60..WGV	*TEM,T=4.0			1	455	458
	8201-	BJ60,HJ60,FJ60	*TT,T=4.0		68111-90A01-	1		
	8008-8201	FJ60..WGG	*TT,T=4.0			1	455	
		68102 GLASS SUB-ASSY, FRONT DOOR, LH						
	8110-8201	BJ60	*TEM,T=4.0		68112-90A00-	1	459	
	8008-8110	BJ60,FJ60..WGV	*TEM,T=4.0			1	455	458

	PROD.DATE	MODELS	DESCRIPTION	R/P	PART NUMBER	QTY	REV.REF.CODE FROM	REV.REF.CODE UP TO
		68102 GLASS SUB-ASSY, FRONT DOOR, LH CONTINUED						
	8201-	BJ60,HJ60,FJ60	*TT,T=4.0		68112-90A01-	1		
	8008-8201	FJ60..WGG	*TT,T=4.0			1	455	
		68141 RUN, FRONT DOOR GLASS						
C	8008-8510	BJ60,FJ60		#	68141-90A00- (68141-90A01-)	2	455	566
C	8510-	HJ60,FJ60			68141-90A03-	2	567	
		68143 RUN, FRONT DOOR GLASS, LOWER						
C	8008-8510	BJ60,FJ60			68143-90A00-	2	455	566
C	8510-	HJ60,FJ60			68143-90A01-	2	567	
		68161 WEATHERSTRIP, FRONT DOOR GLASS, OUTER						
	8008-8601	BJ60,HJ60,FJ60	RH		68160-90A00-	1	455	576
	8008-8601	BJ60,HJ60,FJ60	LH		68210-90A01-	1	455	576
C	8601-8604	FJ60	RH		68160-90A00-	1	577	572
C	8601-8604	FJ60	LH		68210-90A01-	1	577	572
C	8604-	FJ60	RH		68160-90A02-	1	573	
C	8604-	FJ60	LH		68210-90A02-	1	573	
	8601-	HJ60	RH		68160-90A02-	1	577	
	8601-	HJ60	LH		68210-90A02-	1	577	
		68161A CLIP (FOR FRONT DOOR GLASS OUTER WEATHERSTRIP)						
	8008-8601	BJ60,HJ60,FJ60			68211-10030-	12	455	576
C	8601-8604	FJ60				12	577	572
C	8604-	FJ60			68211-90K00-	12	573	
	8601-	HJ60				12	577	
		68170 WEATHERSTRIP ASSY, FRONT DOOR GLASS, INNER						
	8008-8110	BJ60,FJ60..WGV			68170-90A00-	2	455	458
	8110-	BJ60,HJ60,FJ60			68170-90A01-	2	459	
	8008-8110	FJ60..WGG				2	455	458
		68610 CHECK ASSY, FRONT DOOR						
	8008-	BJ60,HJ60,FJ60			68610-22010-	2	455	

* TEM = Tempered
* TT = Tinted Tempered

FIG.67-51 **GENUINE TOYOTA PARTS** **3-B6** **GENUINE TOYOTA PARTS**

PROD.DATE	MODELS	DESCRIPTION	R/P	PART NUMBER	QTY	REV.REF.CODE FROM	REV.REF.CODE UP TO
	68610A PIN (FOR FRONT DOOR CHECK)						
8003-8410	BJ60,FJ60			# 68617-22010- (68617-12010-)	2	455	
8410-8507	BJ60,FJ60			# 68617-12010- (68617-90A00-)	2		
8507-	BJ60,HJ60,FJ60			68617-90A00-	2		

PROD.DATE	MODELS	DESCRIPTION	R/P	PART NUMBER	QTY	REV.REF.CODE FROM	REV.REF.CODE UP TO

FIG.67-53 FRONT DOOR LOCK & HANDLE

3-C6

MR4-13-0267

(8008-)

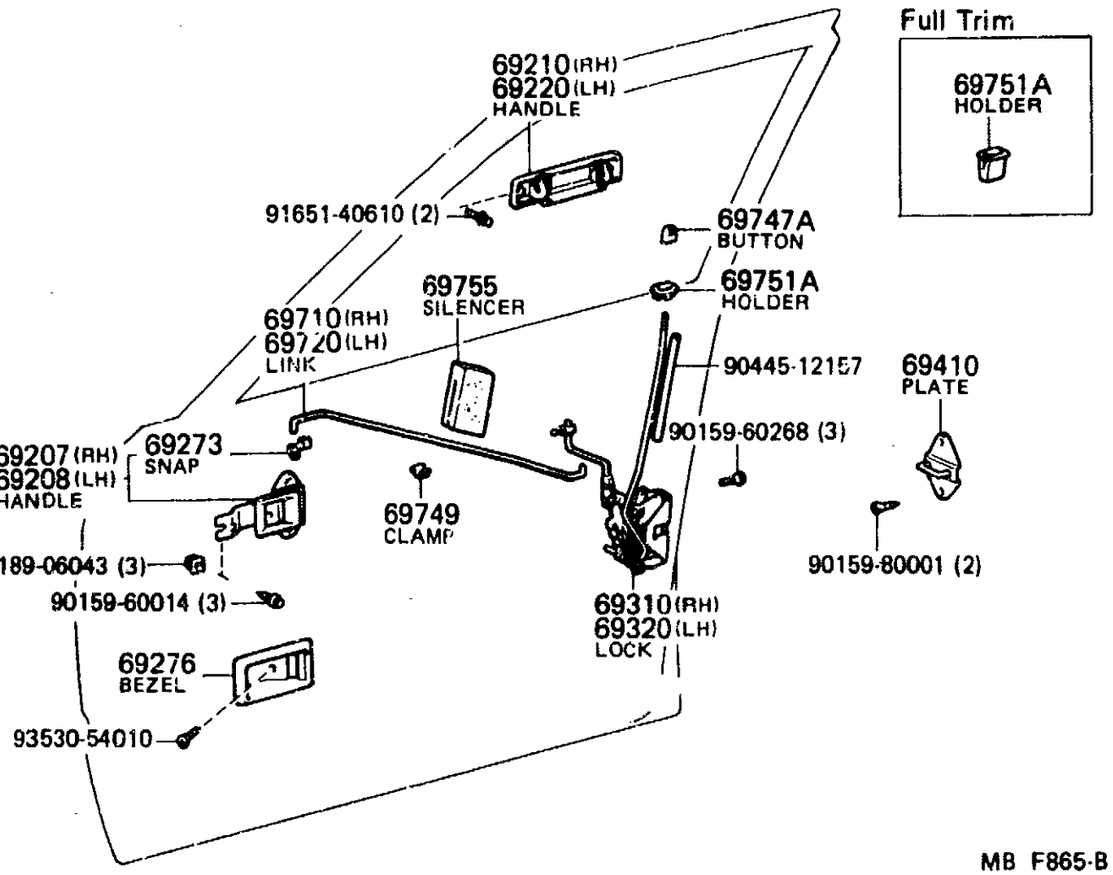

MB F865-B

GENUINE TOYOTA PARTS

PROD.DATE	MODELS	DESCRIPTION	R/P	PART NUMBER	QTY	REV.REF.CODE FROM	REV.REF.CODE UP TO
FIG.	67-53 FRONT DOOR LOCK & HANDLE						
	69207 HANDLE SUB-ASSY, FRONT DOOR INSIDE, RH						
8008-	BJ60,HJ60,FJ60			69205-20020-	1	455	
	69208 HANDLE SUB-ASSY, FRONT DOOR INSIDE, LH						
8008-	BJ60,HJ60,FJ60			69206-20020-	1	455	
	69210 HANDLE ASSY, FRONT DOOR, OUTSIDE RH						
8008-	BJ60,HJ60,FJ60			69210-90A00-	1	455	
	69220 HANDLE ASSY, FRONT DOOR, OUTSIDE LH						
8008-	BJ60,HJ60,FJ60			69220-90A00-	1	455	
	69273 SNAP, DOOR INSIDE HANDLE ROD						
8008-	BJ60,HJ60,FJ60			69273-30020-	2	455	
	69276 BEZEL, FRONT DOOR INSIDE HANDLE						
8411-8504	BJ60	SEPIA BROWN		69277-16040-36	2	515	554
8008-8411	BJ60,FJ60	DARK BROWN		69277-16040-06	2	455	514
8210-	BJ60,HJ60,FJ60	SHADOW GRAY		69277-16040-23	2	467	
8504-	BJ60,HJ60,FJ60	SEPIA BROWN		69277-16040-36	2	555	
8411-8504	FJ60	DARK BROWN		69277-16040-06	2	515	554
	69310 LOCK ASSY, FRONT DOOR, RH						
8008-	BJ60,HJ60,FJ60			69310-90A00-	1	455	
	69320 LOCK ASSY, FRONT DOOR, LH						
8008-	BJ60,HJ60,FJ60			69320-90A00-	1	455	
	69410 PLATE ASSY, FRONT DOOR LOCK STRIKER						
8008-	BJ60,HJ60,FJ60			69410-22030-	2	455	
	69710 LINK ASSY, FRONT DOOR OPEN CONTROL, RH						
8008-	BJ60,HJ60,FJ60			69711-90A00-	1	455	

	PROD.DATE	MODELS	DESCRIPTION	R/P	PART NUMBER	QTY	REV.REF.CODE FROM	REV.REF.CODE UP TO
		69720 LINK ASSY, FRONT DOOR OPEN CONTROL, LH						
	8008-	BJ60,HJ60,FJ60			69712-90A00-	1	455	
		69747A BUTTON, DOOR LOCKING (FOR FRONT DOOR)						
	8411-8504	BJ60	SHADOW GRAY		69741-90K00-03	2	515	554
	8411-8504	BJ60	SEPIA BROWN		69741-90K00-06	2	515	554
	8008-8411	BJ60,FJ60	DARK BROWN		69741-20020-16	2	455	514
	8210-8411	BJ60,FJ60	SHADOW GRAY		69741-20020-03	2	467	514
	8504-	BJ60,HJ60,FJ60	SHADOW GRAY		69741-90K00-03	2	555	
	8504-	BJ60,HJ60,FJ60	SEPIA BROWN		69741-90K00-06	2	555	
	8411-8504	FJ60	SHADOW GRAY		69741-20020-03	2	515	554
	8411-8504	FJ60	DARK BROWN		69741-20020-16	2	515	554
		69749 CLAMP, FRONT DOOR LOCK LINK						
	8008-	BJ60,HJ60,FJ60			69749-12010-	2	455	
		69751A HOLDER, DOOR LOCKING (FOR FRONT DOOR)						
	8110-8201	BJ60,FJ60	FULL TRIM	#	69736-22020- (69736-22021-)	2	459	
C	8201-8604	BJ60,FJ60			69736-22021-	2		572
	8008-8110	BJ60,FJ60..WGV	SEMI TRIM, DARK BROWN		69751-90A00-06	2	455	458
C	8604-	FJ60			69736-90K00-	2	573	
	8008-8110	FJ60..WGG	FULL TRIM	#	69736-22020- (69736-22021-)	2	455	458
	8510-	HJ60			69736-90K00-	2	567	
		69755 SILENCER, FRONT DOOR LOCK LINK						
	8008-	BJ60,HJ60,FJ60			69759-30021-	2	455	

(8008-)

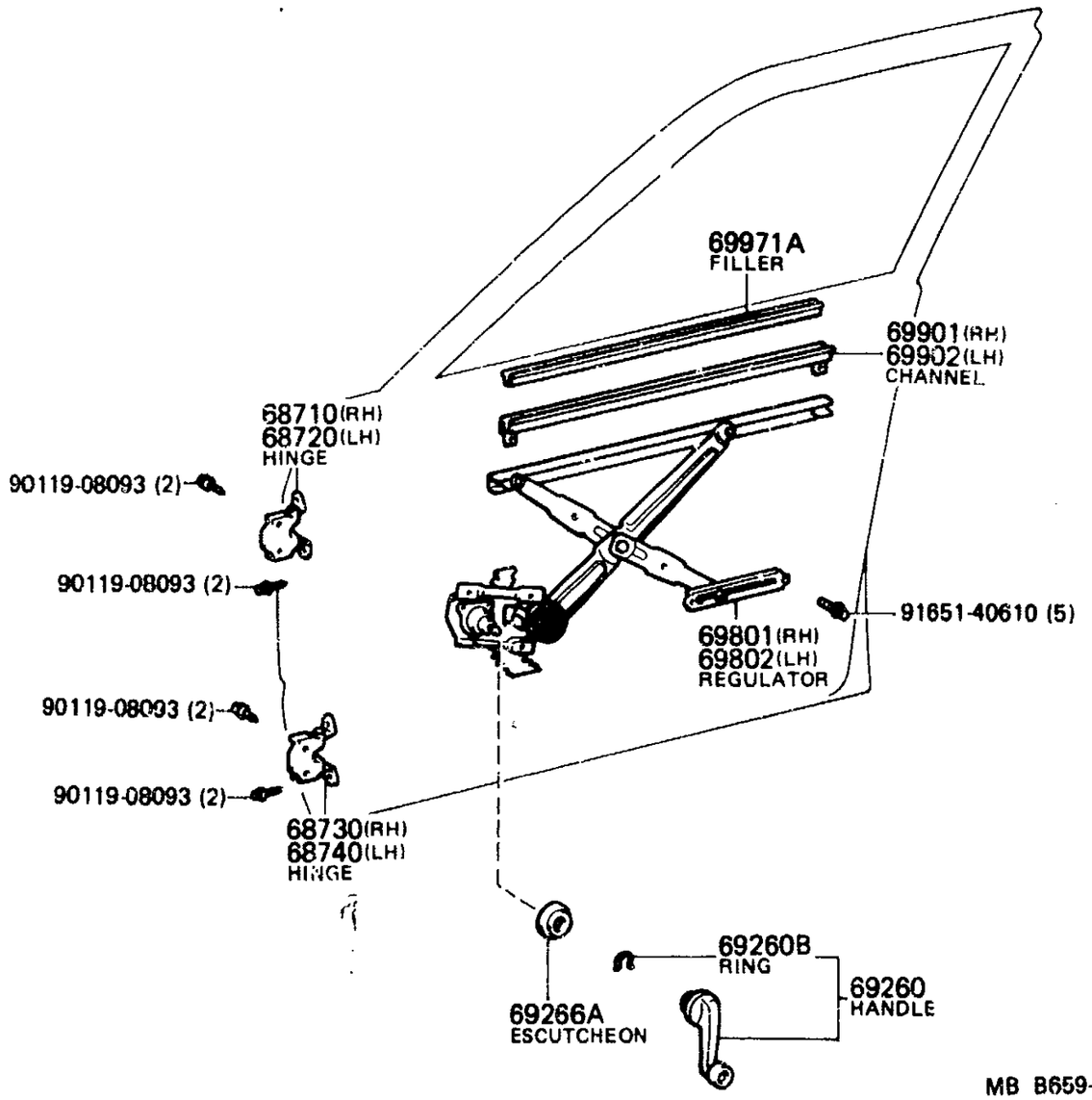

GENUINE TOYOTA PARTS

PROD.DATE	MODELS	DESCRIPTION	R/P	PART NUMBER	QTY	REV.REF.CODE FROM	REV.REF.CODE UP TO
FIG.	67-54 FRONT DOOR WINDOW REGULATOR & HINGE						
	68710 HINGE ASSY, FRONT DOOR, UPPER RH						
8008-	BJ60,HJ60,FJ60			68710-14020-	1	455	
	68720 HINGE ASSY, FRONT DOOR, UPPER LH						
8008-	BJ60,HJ60,FJ60			68720-14020-	1	455	
	68730 HINGE ASSY, FRONT DOOR, LOWER RH						
8008-	BJ60,HJ60,FJ60			68730-14020-	1	455	
	68740 HINGE ASSY, FRONT DOOR, LOWER LH						
8008-	BJ60,HJ60,FJ60			68740-14020-	1	455	
	69260 HANDLE ASSY, FRONT DOOR WINDOW REGULATOR						
8411-8504	BJ60	SEPIA BROWN		69260-12010-46	2	515	554
8008-8411	BJ60,FJ60	DARK BROWN		69260-12010-26	2	455	514
8210-	BJ60,HJ60,FJ60	SHADOW GRAY		69260-12010-03	2	467	
8504-	BJ60,HJ60,FJ60	SEPIA BROWN		69260-12010-46	2	555	
8411-8504	FJ60	DARK BROWN		69260-12010-26	2	515	554
	69260B RING, SHAFT SNAP (FOR FRONT DOOR WINDOW REGULATOR HANDLE)						
8008-	BJ60,HJ60,FJ60			90520-01002-	2	455	
	69266A ESCUTCHEON, DOOR REGULATOR HANDLE (FOR FRONT DOOR)						
8008-	BJ60,HJ60,FJ60	NATURAL		69266-22010-08	2	455	
	69801 REGULATOR SUB-ASSY, FRONT DOOR WINDOW, RH						
8008-8409	BJ60,FJ60			# 69810-90A00- (69810-90A02-)	1	455	536
8409-	BJ60,HJ60,FJ60			69810-90A02-	1	537	
	69802 REGULATOR SUB-ASSY, FRONT DOOR WINDOW, LH						
8008-8409	BJ60,FJ60			# 69820-90A00- (69820-90A02-)	1	455	536
8409-	BJ60,HJ60,FJ60			69820-90A02-	1	537	

FIG.67-54 **GENUINE TOYOTA PARTS** 3-F6 **GENUINE TOYOTA PARTS**

PROD.DATE	MODELS	DESCRIPTION	R/P	PART NUMBER	QTY	REV.REF.CODE FROM	REV.REF.CODE UP TO
	69901 CHANNEL SUB-ASSY, FRONT DOOR GLASS, RH						
8008-8410	BJ60,FJ60			69901-90A00-	1	455	538
8410-	BJ60,HJ60,FJ60			69901-90A03-	1	539	
	69902 CHANNEL SUB-ASSY, FRONT DOOR GLASS, LH						
8008-8410	BJ60,FJ60			69901-90A00-	1	455	538
8410-	BJ60,HJ60,FJ60			69902-90A02-	1	539	
	69971A FILLER, FRONT DOOR GLASS CHANNEL						
8008-8410	BJ60,FJ60			69971-90A00-	2	455	538
8410-	BJ60,HJ60,FJ60			69971-90A01-	2	539	

PROD.DATE	MODELS	DESCRIPTION	R/P	PART NUMBER	QTY	REV.REF.CODE FROM	REV.REF.CODE UP TO

(8008-)

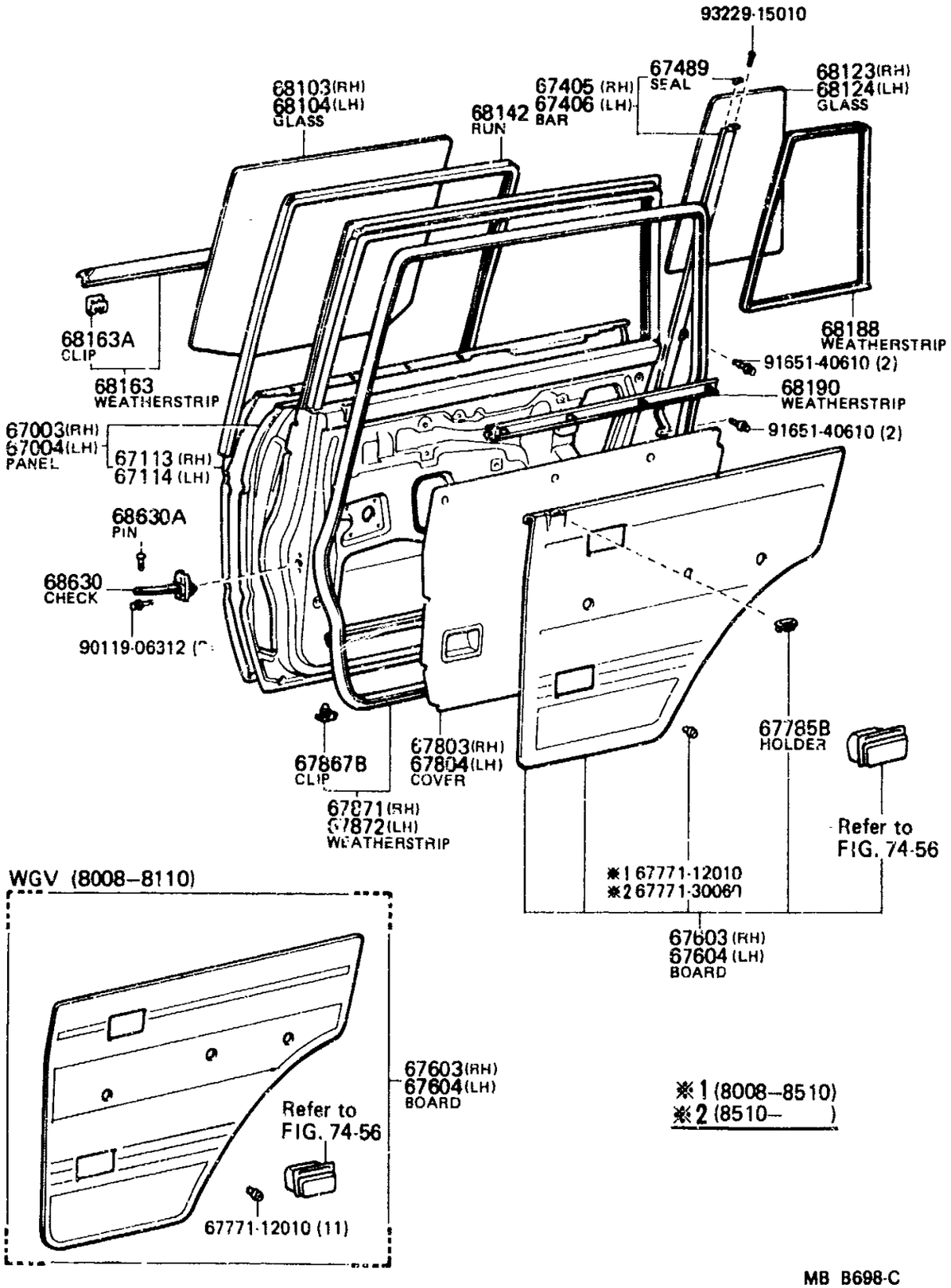

GENUINE TOYOTA PARTS

	PROD.DATE	MODELS	DESCRIPTION	R/P	PART NUMBER	QTY	REV.REF.CODE FROM	REV.REF.CODE UP TO
	FIG.	67-55 REAR DOOR PANEL & GLASS						
		67003	PANEL SUB-ASSY, REAR DOOR, RH					
	8008-8309	BJ60,FJ60			※ 67003-90A01- (67003-90A03-)	1	455	486
	8309-8409	BJ60,FJ60			※ 67003-90A03- (67003-90A22-) •(68180-90A01-) •(75730-90A01-)	1	487	536
	8409-8512	BJ60,HJ60,FJ60			※ 67003-90A07- (67003-90A15-) •(68180-90A01-) •(75730-90A01-)	1	537	574
C	8512-8604	FJ60				1	575	572
C	8604-	FJ60			67003-90A15-	1	573	
	8512-	HJ60				1	575	
		67004	PANEL SUB-ASSY, REAR DOOR, LH					
	8008-8309	BJ60,FJ60			※ 67004-90A01- (67004-90A03-)	1	455	486
	8309-8409	BJ60,FJ60			※ 67004-90A03- (67004-90A07-)	1	487	536
	8409-8512	BJ60,HJ60,FJ60			※ 67004-90A07- (67004-90A15-) •(68230-90A01-) •(75740-90A01-)	1	537	574
C	8512-8604	FJ60				1	575	572
C	8604-	FJ60			67004-90A15-	1	573	
	8512-	HJ60				1	575	
		67113	PANEL, REAR DOOR, OUTER RH					
	8008-8512	BJ60,HJ60,FJ60			※ 67113-90A01- (67113-90A05-) •(68180-90A01-) •(75730-90A01-)	1	455	574
C	8512-8604	FJ60				1	575	572
C	8604-	FJ60			67113-90A05-	1	573	
	8512-	HJ60				1	575	
		67114	PANEL, REAR DOOR, OUTER LH					
	8008-8512	BJ60,HJ60,FJ60			※ 67114-90A01- (67114-90A05-) •(68230-90A01-) •(75740-90A01-)	1	455	574

	PROD.DATE	MODELS	DESCRIPTION	R/P	PART NUMBER	QTY	REV.REF.CODE FROM	REV.REF.CODE UP TO
		67114 PANEL, REAR DOOR, OUTER LH CONTINUED						
C	8604-	FJ60			67114-90A05-	1	573	
	8512-	HJ60				1	575	
		67405 BAR SUB-ASSY, REAR DOOR WINDOW DIVISION, RH						
	8008-	BJ60,HJ60,FJ60			67407-90A00-	1	455	
		67406 BAR SUB-ASSY, REAR DOOR WINDOW DIVISION, LH						
	8008-	BJ60,HJ60,FJ60			67408-90A00-	1	455	
		67489 SEAL, REAR DOOR DIVISION BAR						
	8008-	BJ60,HJ60,FJ60	RH		67481-20010-	1	455	
	8008-	BJ60,HJ60,FJ60	LH		67482-20010-	1	455	
		67603 BOARD SUB-ASSY, REAR DOOR TRIM, RH						
	8411-8504	BJ60	SHADOW GRAY		67630-90A12-03	1	515	554
	8411-8504	BJ60	SEPIA BROWN		67630-90A12-06	1	515	554
	8110-8411	BJ60,FJ60	DARK BROWN		67630-90A03-06	1	459	514
	8210-8411	BJ60,FJ60	SHADOW GRAY		67630-90A03-03	1	467	514
	8008-8110	BJ60,FJ60..WGV	DARK BROWN		67630-90A02-06	1	455	458
C	8504-8608	BJ60,HJ60,FJ60	SHADOW GRAY		67630-90A12-03	1	555	600
C	8504-8608	BJ60,HJ60,FJ60	SEPIA BROWN		67630-90A12-06	1	555	600
	8411-8504	FJ60	SHADOW GRAY		67630-90A03-03	1	515	554
	8411-8504	FJ60	DARK BROWN		67630-90A03-06	1	515	554
	8008-8110	FJ60..WGG	DARK BROWN			1	455	458
C	8608-	HJ60,FJ60	SHADOW GRAY		67630-90A24-03	1	601	
C	8608-	HJ60,FJ60	SEPIA BROWN		67630-90A24-06	1	601	
		67604 BOARD SUB-ASSY, REAR DOOR TRIM, LH						
	8411-8504	BJ60	SHADOW GRAY	#	67640-90A12-03 (67640-90A03-03)	1	515	554

	PROD.DATE	MODELS	DESCRIPTION	R/P	PART NUMBER	QTY	REV.REF.CODE FROM	REV.REF.CODE UP TO
		67604 BOARD SUB-ASSY, REAR DOOR TRIM, LH CONTINUED						
	8411-8504	BJ60	SEPIA BROWN		67640-90A12-06	1	515	554
	8110-8411	BJ60,FJ60	DARK BROWN		67640-90A03-06	1	459	514
	8210-8411	BJ60,FJ60	SHADOW GRAY		67640-90A03-03	1		514
	8008-8110	BJ60,FJ60..WGV	DARK BROWN		67640-90A02-06	1	455	458
C	8504-8608	BJ60,HJ60,FJ60	SEPIA BROWN		67640-90A12-06	1	555	600
C	8504-8608	BJ60,HJ60,FJ60	SHADOW GRAY	#	67640-90A12-03 (67640-90A03-03)	1	555	600
	8608-	HJ60,FJ60	SHADOW GRAY		67640-90A24-03	1	601	
	8411-8504	FJ60	SHADOW GRAY		67640-90A03-03	1	515	554
	8411-8504	FJ60	DARK BROWN		67640-90A03-06	1	515	554
	8008-8110	FJ60..WGG	DARK BROWN			1	455	458
C	8608-	HJ60,FJ60	SEPIA BROWN		67640-90A24-06	1	601	
		67785B HOLDER, DOOR LOCKING BUTTON COLLAR (FOR REAR DOOR)						
	8110-	BJ60,HJ60,FJ60			69751-20040-	2	459	
	8008-8110	FJ60..WGG				2	455	458
		67803 COVER SUB-ASSY, REAR DOOR SERVICE HOLE, RH						
	8008-	BJ60,HJ60,FJ60			67805-90A01-	1	455	
		67804 COVER SUB-ASSY, REAR DOOR SERVICE HOLE, LH						
	8008-	BJ60,HJ60,FJ60			67805-90A01-	1	455	
		67867B CLIP, DOOR WEATHERSTRIP (FOR REAR DOOR)						
	8008-	BJ60,HJ60,FJ60			67868-30040-	42	455	
		67871 WEATHERSTRIP, REAR DOOR, RH						
	8008-	BJ60,HJ60,FJ60			67871-90A00-	1	455	
		67872 WEATHERSTRIP, REAR DOOR, LH						
	8008-	BJ60,HJ60,FJ60			67872-90A00-	1	455	
		68103 GLASS SUB-ASSY, REAR DOOR, RH						
	8110-8201	BJ60	*TEM,T=4.0		68113-90A00-	1	459	

* TEM = Tempered

	PROD.DATE	MODELS	DESCRIPTION	R/P	PART NUMBER	QTY	REV.REF.CODE FROM	REV.REF.CODE UP TO
		68103 GLASS SUB-ASSY, REAR DOOR, RH CONTINUED						
	8008-8110	BJ60,FJ60..WGV	*TEM,T=4.0		68113-90A00-	1	455	458
	8201-	BJ60,HJ60,FJ60	*TT,T=4.0		68113-90A01-	1		
	8008-8201	FJ60..WGG	*TT,T=4.0			1	455	
		68104 GLASS SUB-ASSY, REAR DOOR, LH						
	8110-8201	BJ60	*TEM,T=4.0		68114-90A00-	1	452	
	8008-8110	BJ60,FJ60..WGV	*TEM,T=4.0			1	455	458
	8201-	BJ60,HJ60,FJ60	*TT,T=4.0		68114-90A01-	1		
	8008-8201	FJ60..WGG	*TT,T=4.0			1	455	
		68123 GLASS, REAR DOOR WINDOW, RH						
	8110-8201	BJ60	*TEM,T=4.0		68123-90A00-	1	459	
	8008-8201	BJ60,FJ60..WGV	*TEM,T=4.0			1	455	458
	8201-	BJ60,HJ60,FJ60	*TT,T=4.0		68123-90A01-	1		
	8008-8201	FJ60..WGG	*TT,T=4.0			1	455	
		68124 GLASS, REAR DOOR WINDOW, LH						
	8110-8201	BJ60	*TEM,T=4.0		68124-90A00-	1	459	
	8008-8201	BJ60,FJ60..WGV	*TEM,T=4.0			1	455	458
	8201-	BJ60,HJ60,FJ60	*TT,T=4.0		68124-90A01-	1		
	8008-8201	FJ60..WGG	*TT,T=4.0			1	455	
		68142 RUN, REAR DOOR GLASS						
C	8008-8510	BJ60,FJ60			68142-90A00-	2	455	566
C	8510-	HJ60,FJ60			68142-90A01-	2	567	
		68163 WEATHERSTRIP, REAR DOOR GLASS, OUTER						
	8008-8512	BJ60,HJ60,FJ60	RH		68180-90A00-	1	455	574
	8008-8512	BJ60,HJ60,FJ60	LH		68230-90A00-	1	455	574
C	8512-8604	FJ60	RH		68180-90A00-	1	566	572
C	8512-8604	FJ60	LH		68230-90A00-	1	566	572
C	8604-	FJ60	RH		68180-90A01-	1	573	
C	8604-	FJ60	LH		68230-90A01-	1	573	
	8512-	HJ60	RH		68180-90A01-	1	575	

	PROD.DATE	MODELS	DESCRIPTION	R/P	PART NUMBER	QTY	REV.REF.CODE FROM	REV.REF.CODE UP TO
		68163 WEATHERSTRIP, REAR DOOR GLASS, OUTER CONTINUED						
	8512-	HJ60	LH		68230-90A01-	1	575	
		68163A CLIP (FOR REAR DOOR GLASS OUTER WEATHERSTRIP)						
	8008-8512	BJ60,HJ60,FJ60			68211-10030-	8	455	574
C	8512-8604	FJ60				8	575	572
C	8604-	FJ60			68211-90K00-	8	573	
	8512-	HJ60				8	575	
		68188 WEATHERSTRIP, REAR DOOR QUARTER WINDOW, RH						
	8008-	BJ60,HJ60,FJ60	RH		68188-90A00-	1	455	
	8008-	BJ60,HJ60,FJ60	LH		68189-90A00-	1	455	
		68190 WEATHERSTRIP ASSY, REAR DOOR GLASS, INNER						
	8008-8110	BJ60,FJ60..WGV			68190-90A00-	2	455	458
	8110-	BJ60,HJ60,FJ60			68190-90A01-	2	459	
	8008-8110	FJ60..WGG				2	455	458
		68630 CHECK ASSY, REAR DOOR						
	8008-	BJ60,HJ60,FJ60			68630-90A00-	2	455	
		68630A PIN (FOR REAR DOOR CHECK)						
	8008-8410	BJ60,FJ60			# 68617-22010- (68617-12010-)	2	455	
	8410-8507	BJ60,FJ60			# 68617-12010- (68617-90A00-)	2		
	8507-	BJ60,HJ60,FJ60			68617-90A00-	2		

* TEM = Tempered
* TT = Tinted Tempered

(8008-)

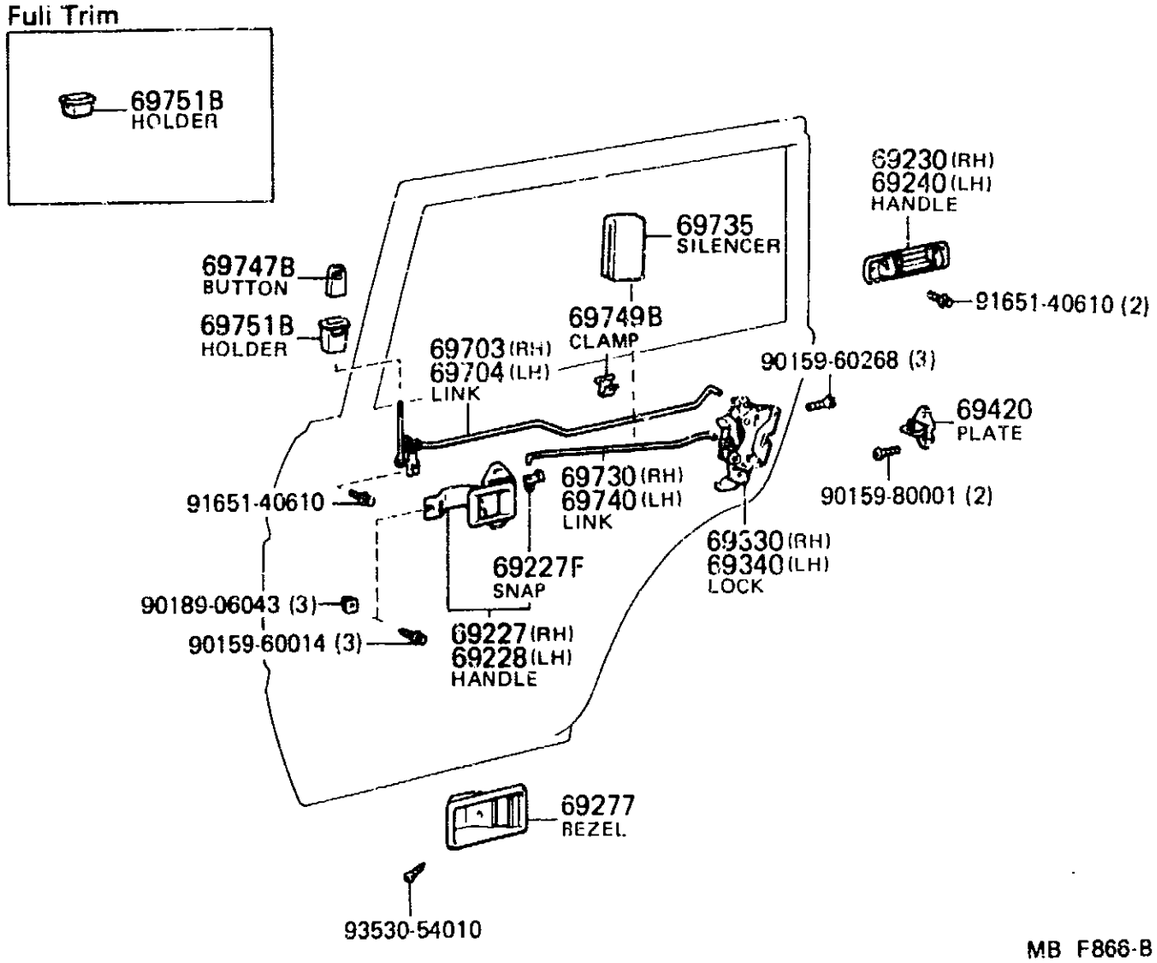

MB F866-B

GENUINE TOYOTA PARTS

PROD.DATE	MODELS	DESCRIPTION	R/H	PART NUMBER	QTY	REV.REF.CODE FROM	REV.REF.CODE UP TO
FIG.	67-56 REAR DOOR LOCK & HANDLE						
	69227 HANDLE, REAR DOOR INSIDE, RH						
8008-	BJ60,HJ60,FJ60			69205-20020-	1	455	
	69227F SNAP (FOR REAR DOOR INSIDE HANDLE)						
8008-	BJ60,HJ60,FJ60			69273-30020-	2	455	
	69228 HANDLE, REAR DOOR INSIDE, LH						
8008-	BJ60,HJ60,FJ60			69206-20020-	1	455	
	69230 HANDLE ASSY, REAR DOOR OUTSIDE, RH						
8008-	BJ60,HJ60,FJ60			69230-90A00-	1	455	
	69240 HANDLE ASSY, REAR DOOR OUTSIDE, LH						
8008-	BJ60,HJ60,FJ60			69240-90A00-	1	455	
	69277 BEZEL, REAR DOOR INSIDE HANDLE						
8411-8504	BJ60	SEPIA BROWN		69277-16040-36	2	515	554
8008-8411	BJ60,FJ60	DARK BROWN		69277-16040-06	2	455	514
8210-	BJ60,HJ60,FJ60	SHADOW GRAY		69277-16040-23	2	467	
8504-	BJ60,HJ60,FJ60	SEPIA BROWN		69277-16040-36	2	555	
8411-8504	FJ60	DARK BROWN		69277-16040-06	2	515	554
	69330 LOCK ASSY, REAR DOOR, RH						
8008-	BJ60,HJ60,FJ60			69330-90A00-	1	455	
	69340 LOCK ASSY, REAR DOOR, LH						
8008-	BJ60,HJ60,FJ60			69340-90A00-	1	455	
	69420 PLATE ASSY, REAR DOOR LOCK STRIKER						
8008-	BJ60,HJ60,FJ60			69410-22030-	2	455	
	69703 LINK SUB-ASSY, REAR DOOR LOCKING CONTROL, RH						
8411-8504	BJ60			69770-90A02-	1	515	554
8008-8411	BJ60,FJ60			69770-90A00-	1	455	514

PROD.DATE	MODELS	DESCRIPTION	R/P	PART NUMBER	QTY	REV.REF.CODE FROM	REV.REF.CODE UP TO
	69703 LINK SUB-ASSY, REAR DOOR LOCKING CONTROL, RH CONTINUED						
8504-	BJ60,HJ60,FJ60			69770-90A02-	1	555	
8411-8504	FJ60			69770-90A00-	1	515	554
	69704 LINK SUB-ASSY, REAR DOOR LOCKING CONTROL, LH						
8411-8504	BJ60			69780-90A02-	1	515	554
8008-8411	BJ60,FJ60			69780-90A00-	1	455	514
8504-	BJ60,HJ60,FJ60			69780-90A02-	1	555	
8411-8504	FJ60			69780-90A00-	1	515	554
	69730 LINK ASSY, REAR DOOR OPEN CONTROL, RH						
8008-	BJ60,HJ60,FJ60			69713-90A00-	1	455	
	69735 SILENCER, REAR DOOR LOCK LINK						
8008-	BJ60,HJ60,FJ60			69759-30021-	2	455	
	69740 LINK ASSY, REAR DOOR OPEN CONTROL, LH						
8008-	BJ60,HJ60,FJ60			69714-90A00-	1	455	
	69741B BUTTON, DOOR LOCKING (FOR REAR DOOR)						
8411-8504	BJ60	SHADOW GRAY		69741-90K00-03	2	515	554
8411-8504	BJ60	SEPIA BROWN		69741-90K00-06	2	515	554
8008-8411	BJ60,FJ60	DARK BROWN		69741-20020-16	2	455	514
8210-8411	BJ60,FJ60	SHADOW GRAY		69741-20020-03	2	467	514
8504-	BJ60,HJ60,FJ60	SHADOW GRAY		69741-90K00-03	2	555	
8504-	BJ60,HJ60,FJ60	SEPIA BROWN		69741-90K00-06	2	555	
8411-8504	FJ60	SHADOW GRAY		69741-20020-03	2	515	554
8411-8504	FJ60	DARK BROWN		69741-20020-16	2	515	554
	69749B CLAMP, REAR DOOR LOCK LINK						
8008-	BJ60,HJ60,FJ60			69749-12010-	2	455	

GENUINE TOYOTA PARTS

PROD.DATE	MODELS	DESCRIPTION	R/P	PART NUMBER	QTY	REV.REF.CODE FROM	REV.REF.CODE UP TO
	69751B HOLDER, DOOR LOCKING (FOR REAR DOOR)						
8110-8201	BJ60,FJ60			# 69736-22020- (69736-22021-)	2	459	
C 8201-8604	BJ60,FJ60			69736-22021-	2		572
8008-8110	BJ60,FJ60,,WGV	SEMI TRIM, DARK BROWN		69751-90A00-06	2	455	458
C 8604-	FJ60			69736-90K00-	2	573	
8008-8110	FJ60,,WGG	FULL TRIM		# 69736-22020- (69736-22021-)	2	455	458
8510-	HJ60			69736-90K00-	2	567	

FIG.67-57 REAR DOOR WINDOW REGULATOR & HINGE

3-L6

(8008-)

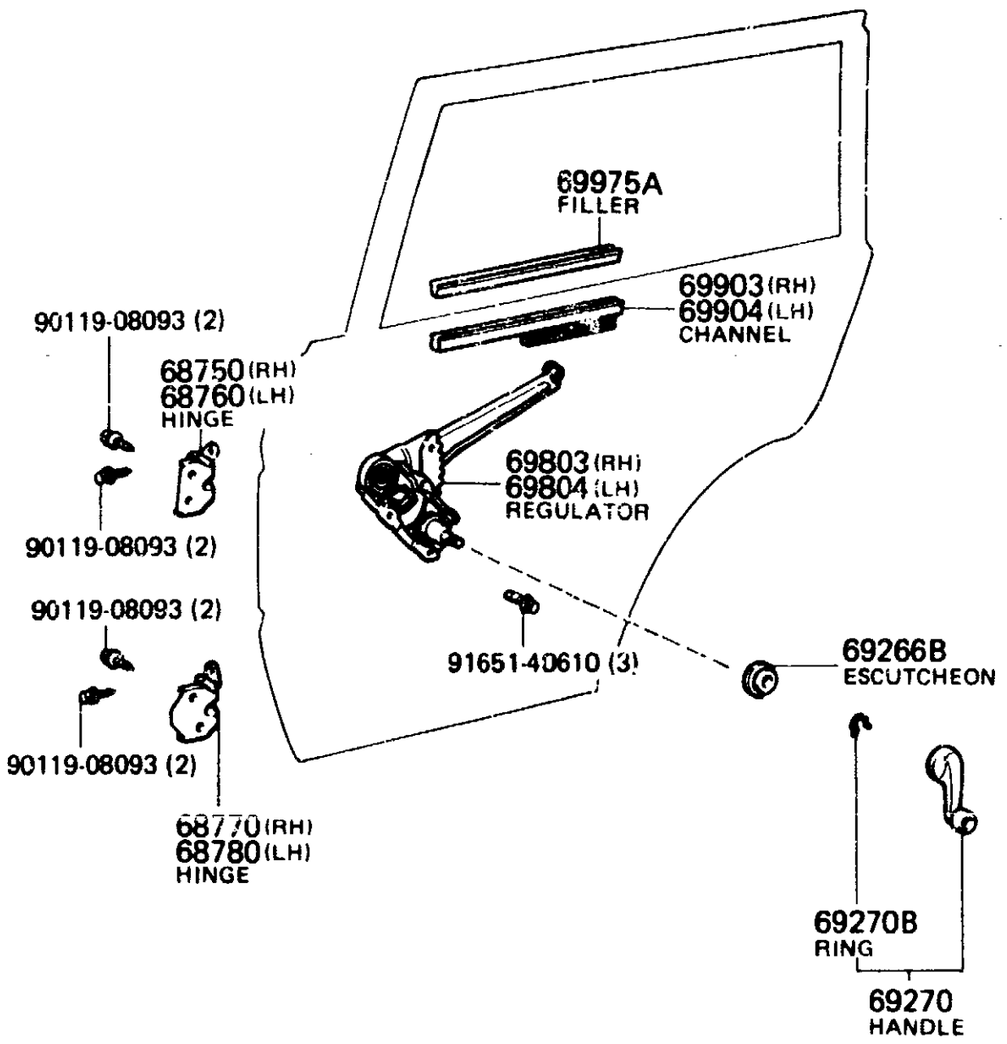

MB B662 A

GENUINE TOYOTA PARTS

PROD.DATE	MODELS	DESCRIPTION	R/P	PART NUMBER	QTY	REV.REF.CODE FROM:	REV.REF.CODE UP TO
FIG.	67-57 REAR DOOR WINDOW REGULATOR & HINGE						
	68750 HINGE ASSY, REAR DOOR, UPPER RH						
8008-	BJ60,HJ60,FJ60			68710-30080-	1	455	
	68760 HINGE ASSY, REAR DOOR, UPPER LH						
8008-	BJ60,HJ60,FJ60			68720-30020-	1	455	
	68770 HINGE ASSY, REAR DOOR, LOWER RH						
8008-	BJ60,HJ60,FJ60			68730-14020-	1	455	
	68780 HINGE ASSY, REAR DOOR, LOWER LH						
8008-	BJ60,HJ60,FJ60			68740-14020-	1	455	
	69266B ESCUTCHEON, DOOR REGULATOR HANDLE (FOR REAR DOOR)						
8008-	BJ60,HJ60,FJ60	NATURAL		69266-22010-08	2	455	
	69270 HANDLE ASSY, REAR DOOR WINDOW REGULATOR						
8411-8504	BJ60	BROWN		69260-12010-46	2	515	554
8008-8411	BJ60,FJ60	DARK BROWN		69260-12010-26	2	455	514
8210-	BJ60,HJ60,FJ60	SHADOW GRAY		69260-12010-03	2	467	
8504-	BJ60,HJ60,FJ60	SEPIA BROWN		69260-12010-46	2	555	
8411-8504	FJ60	DARK BROWN		69260-12010-26	2	515	554
	69270B RING, SHAFT SNAP (FOR REAR DOOR WINDOW REGULATOR HANDLE)						
8008-	BJ60,HJ60,FJ60			90520-01002-	2	455	
	69803 REGULATOR SUB-ASSY, REAR DOOR WINDOW, RH						
8008-8409	BJ60,FJ60			# 69830-90A00- (69830-90A01-)	1	455	536
8409-	BJ60,HJ60,FJ60			69830-90A01-	1	537	
	69804 REGULATOR SUB-ASSY, REAR DOOR WINDOW, LH						
8008-8409	BJ60,FJ60			# 69840-90A00- (69840-90A01-)	1	455	536
8409-	BJ60,HJ60,FJ60			69840-90A01-	1	537	

PROD.DATE	MODELS	DESCRIPTION	R/P	PART NUMBER	QTY	REV.REF.CODE FROM	REV.REF.CODE UP TO
	69903 CHANNEL SUB-ASSY, REAR DOOR GLASS, RH						
8411-8504	BJ60			69905-90A03-	1	515	554
8008-8410	BJ60,FJ60		#	69905-90A00- (69905-90A02-)	1	455	538
8410-8411	BJ60,FJ60			69905-90A02-	1	539	514
8504-	BJ60,HJ60,FJ60			69905-90A03-	1	555	
8411-8504	FJ60			69905-90A02-	1	515	554
	69904 CHANNEL SUB-ASSY, REAR DOOR GLASS, LH						
8411-8504	BJ60			69906-90A03-	1	515	554
8008-8410	BJ60,FJ60		#	69906-90A00- (69906-90A02-)	1	455	538
8410-8411	BJ60,FJ60			69906-90A02-	1	539	514
8504-	BJ60,HJ60,FJ60			69906-90A03-	1	555	
8411-8504	FJ60			69906-90A02-	1	515	554
	69975A FILLER, REAR DOOR GLASS CHANNEL						
8008-8410	BJ60,FJ60			69975-90A00-	2	455	538
8410-	BJ60,HJ60,FJ60			69975-90A01-	2	539	

PROD.DATE	MODELS	DESCRIPTION	R/P	PART NUMBER	QTY	REV.REF.CODE FROM	REV.REF.CODE UP TO

FIG.67-61 BACK DOOR PANEL & GLASS

MR4-13-0272

GENUINE TOYOTA PARTS

(8008-)

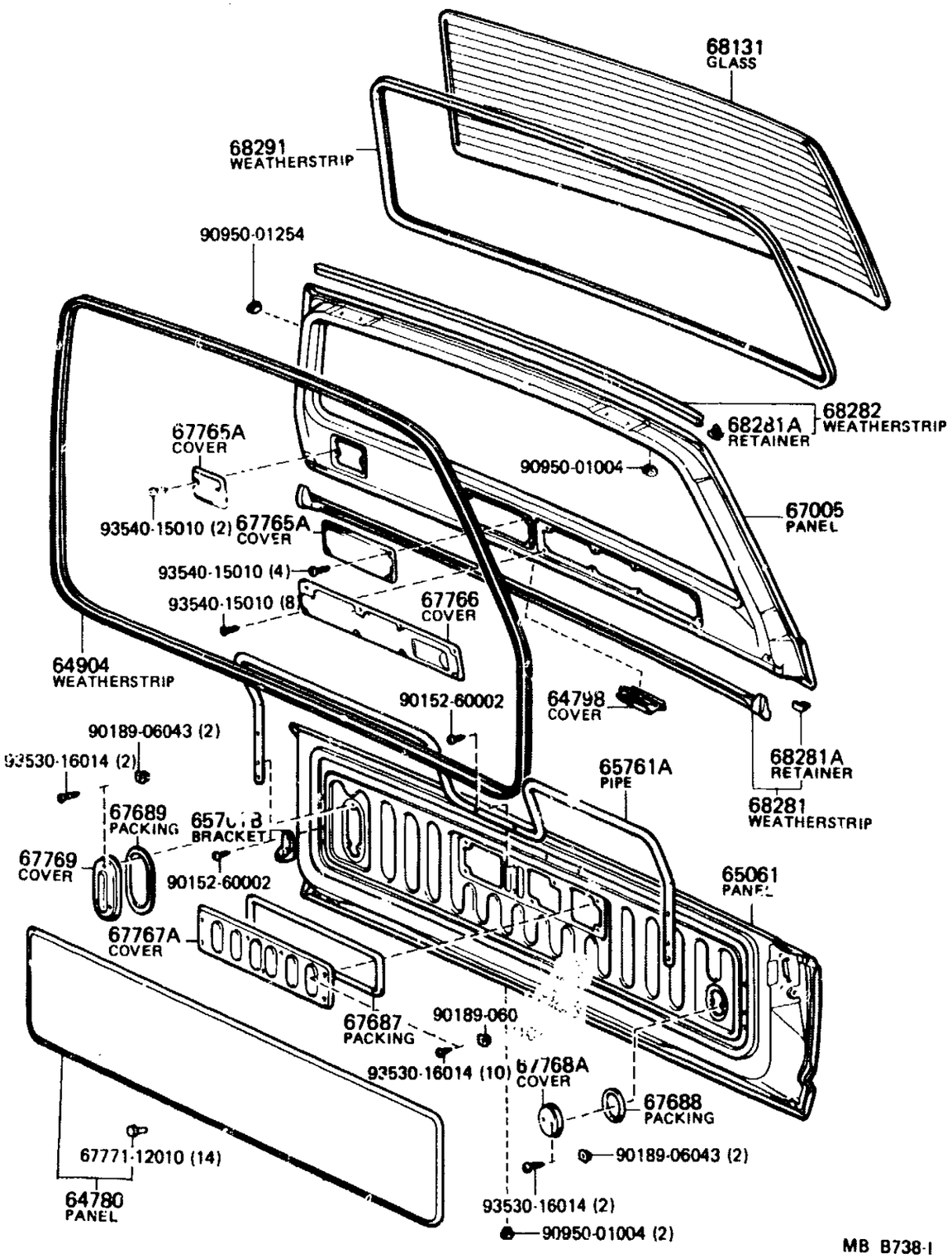

MB B738-I

PROD.DATE	MODELS	DESCRIPTION	R/P	PART NUMBER	QTY	REV.REF.CODE FROM	REV.REF.CODE UP TO
FIG.	67-61 BACK DOOR PANEL & GLASS						
	64780 PANEL ASSY, TAIL GATE TRIM						
8411-8504	BJ60	SHADOW GRAY		64780-90A01-13	1	515	554
8411-8504	BJ60	SEPIA BROWN		64780-90A01-16	1	515	554
8110-8411	BJ60,FJ60	DARK BROWN		64780-90A01-06	1	459	514
8210-8411	BJ60,FJ60	SHADOW GRAY		64780-90A01-03	1	467	514
8504-	BJ60,HJ60,FJ60	SHADOW GRAY		64780-90A01-13	1	555	
8504-	BJ60,HJ60,FJ60	SEPIA BROWN		64780-90A01-16	1	555	
8411-8504	FJ60	SHADOW GRAY		64780-90A01-03	1	515	554
8411-8504	FJ60	DARK BROWN		64780-90A01-06	1	515	554
8008-8110	FJ60,,WGG	DARK BROWN			1	455	458
	64798 COVER, BACK DOOR LOCK						
8201-	BJ60,HJ60,FJ60			64798-90A00-	1		
	64904 WEATHERSTRIP SUB-ASSY, BACK DOOR						
8008-8401	BJ60,FJ60			# 67881-90A00- (67881-90A06-)	1	455	
8401-	BJ60,HJ60,FJ60			67881-90A06-	1		
	65061 PANEL SUB-ASSY, TAIL GATE						
8210-8411	BJ60			65061-90A03-	1	467	514
8110-8210	BJ60,FJ60	W/TAIL GATE PROTECTOR,PIPE			1	459	466
8008-8110	BJ60,FJ60,,WGV			65061-90A01-	1	455	458
8008-8110	BJ60,FJ60,,WGV	W/TAIL GATE PROTECTOR,PIPE		65061-90A06-	1	455	458
8411-	BJ60,HJ60,FJ60			65061-90A00-	1	515	
8008-8110	FJ60,,WGG	W/TAIL GATE PROTECTOR,PIPE		65061-90A03-	1	455	458
8008-8411	FJ60,,WGG			65061-90A00-	1	455	514

GENUINE TOYOTA PARTS

	PROD.DATE	MODELS	DESCRIPTION	R/P	PART NUMBER	QTY	REV.REF.CODE FROM	REV.REF.CODE UP TO
		65761A PIPE, TAIL GATE PROTECTOR						
	8008-8210	BJ60,FJ60			65761-90A00-	1	455	466
		65761B BRACKET, TAIL GATE PROTECTOR PIPE						
	8008-8210	BJ60,FJ60			65766-90A00-	2	455	466
		67005 PANEL SUB-ASSY, BACK DOOR						
	8008-8210	BJ60,FJ60	W/RR WIPER	#	67005-90A01- (67005-90A08-) •(67847-90A01-)	1	455	466
	8008-8210	BJ60,FJ60	W/O RR WIPER	#	67005-90A02- (67005-90A07-) •(67847-90A01-)	1	455	466
	8210-8212	BJ60,FJ60	W/RR WIPER	#	67005-90A04- (67005-90A08-)	1	467	
	8210-8212	BJ60,FJ60	W/O RR WIPER	#	67005-90A05- (67005-90A07-)	1	467	
	8212-8503	BJ60,FJ60	W/O RR WIPER		67005-90A07-	1		564
	8212-8503	BJ60,FJ60	W/RR WIPER		67005-90A08-	1		564
	8503-8509	BJ60,FJ60	W/O RR WIPER	#	67005-90A14- (67005-90A22-)	1	565	
	8503-8509	BJ60,FJ60	W/RR WIPER	#	67005-90A16- (67005-90A23-)	1	565	
C	8509-8604	BJ60,HJ60,FJ60	W/RR WIPER		67005-90A23-	1		572
	8509-	BJ60,HJ60,FJ60	W/O RR WIPER		67005-90A22-	1		
C	8604-	FJ60	W/RR WIPER		67005-90A20-	1	573	
C	8604-	HJ60	W/RR WIPER		67005-90A23-	1	573	
		67687 PACKING, TAIL GATE SERVICE HOLE, NO.1						
	8008-	BJ60,HJ60,FJ60	L=910		67687-90A00-	1	455	
		67688 PACKING, TAIL GATE SERVICE HOLE, NO.2						
	8008-	BJ60,HJ60,FJ60	L=267		67688-90A00-	1	455	
		67689 PACKING, TAIL GATE SERVICE HOLE, NO.3						
	8008-	BJ60,HJ60,FJ60	L=393		67689-90A00-	1	455	

	PROD.DATE	MODELS	DESCRIPTION	R/P	PART NUMBER	QTY	REV.REF.CODE FROM	REV.REF.CODE UP TO
		67765A COVER, BACK DOOR SERVICE HOLE, NO.1						
	8008-8210	BJ60,FJ60			67765-90A00-	2	455	
	8210-	BJ60,HJ60,FJ60	RH			1	467	
	8210-	BJ60,HJ60,FJ60	CTR		67847-90A01-	1	467	
		67766 COVER, BACK DOOR SERVICE HOLE, NO.2						
	8008-	BJ60,HJ60,FJ60			67766-90A00-	1	455	
		67767A COVER, TAIL GATE SERVICE HOLE, NO.1						
	8008-	BJ60,HJ60,FJ60			67767-90A00-	1	455	
		67768A COVER, TAIL GATE SERVICE HOLE, NO.2						
	8008-	BJ60,HJ60,FJ60			67768-90A00-	1	455	
		67769 COVER, TAIL GATE SERVICE HOLE, NO.3						
	8008-	BJ60,HJ60,FJ60			67769-90A00-	1	455	
		68131 GLASS, BACK DOOR						
C	8008-8510	BJ60,FJ60..WGG	*EHTT,T=4.0		68131-90A03-	1	455	566
	8008-8110	BJ60,FJ60..WGV	*TEM,T=4.0		68131-90A00-	1	455	458
	8008-8110	BJ60,FJ60..WGV	*EHT,T=4.0		68131-90A01-	1	455	458
C	8008-8604	BJ60,HJ60,FJ60..WGG	*TT,T=4.0		68131-90A02-	1	455	572
C	8510-8604	FJ60	*EHTT,T=4.0		68131-90A03-	1	566	572
C	8604-8608	FJ60	*TT,T=3.5		68131-90A19-	1	573	600
C	8604-	FJ60	*EHTT,T=3.5		68131-90A20-	1	573	
C	8510-8608	HJ60	*EHTT,T=4.0		68131-90A09-	1	567	600
C	8604-8608	HJ60	*TT,T=4.0		68131-90A02-	1	573	600
C	8608-	HJ60	*EHTT,T=3.5		68131-90A25-	1	601	
C	8608-	HJ60,FJ60	*TT,T=3.5		68131-90A19-	1	60	
		68281 WEATHERSTRIP, BACK DOOR, LOWER						
	8008-	BJ60,HJ60,FJ60			68281-90A00-	1	455	

* EHTT = Electrical Heated, Tinted, Tempered
* TEM = Tempered
* EHT = Electrical Heated Tempered
* TT = Tinted Tempered

	PROD.DATE	MODELS	DESCRIPTION	R/P	PART NUMBER	QTY	REV.REF.CODE FROM	REV.REF.CODE UP TO
		68281A RETAINER, BACK DOOR WEATHERSTRIP						
	8008-	BJ60,HJ60,FJ60			67868-30040-	26	455	
		68282 WEATHERSTRIP, BACK DOOR, UPPER						
	8008-	BJ60,HJ60,FJ60			68282-90A00-	1	455	
		68291 WEATHERSTRIP, BACK DOOR GLASS						
	8008-8110	BJ60,FJ60,,WGV	W/O MOULDING		68291-90A00-	1	455	458
C	8008-8608	BJ60,HJ60,FJ60	W/MOULDING		68291-90A01-	1	455	600
C	8608-	FJ60			68291-90A00-	1	601	
C	8608-	HJ60			68291-90A01-	1	601	

PROD.DATE	MODELS	DESCRIPTION	R/P	PART NUMBER	QTY	REV.REF.CODE FROM	REV.REF.CODE UP TO

GENUINE TOYOTA PARTS

(8008-)

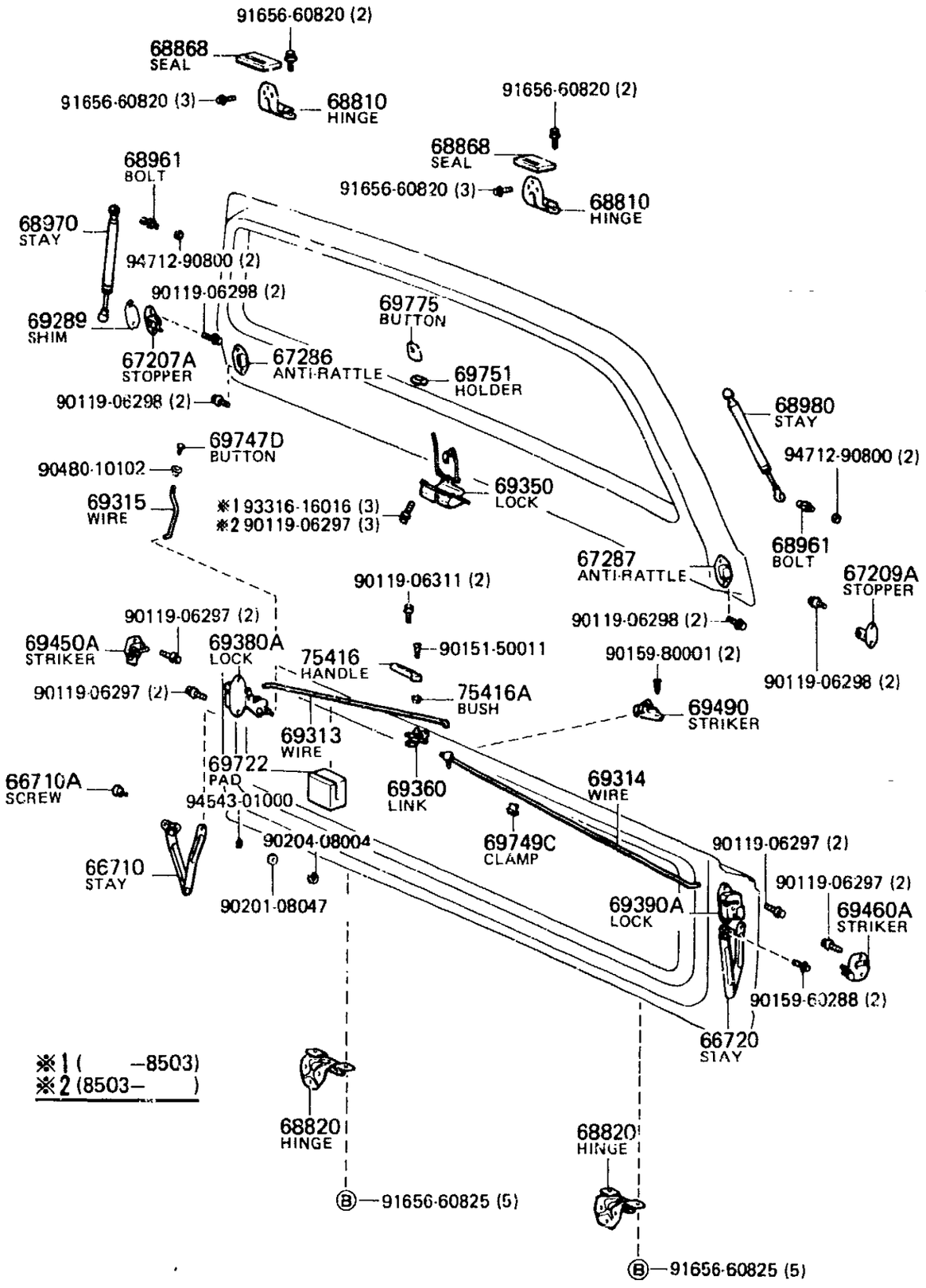

PROD.DATE		MODELS	DESCRIPTION	R/P	PART NUMBER	QTY	REV.REF.CODE FROM	REV.REF.CODE UP TO
FIG•		67-62 BACK DOOR LOCK & HINGE						
		66710 STAY ASSY, TAIL GATE, RH						
8008-		BJ60,HJ60,FJ60			65706-90A00-	1	455	
		66710A SCREW, TAIL GATE ASSY						
8008-		BJ60,HJ60,FJ60			65777-90A00-	2	455	
		66720 STAY ASSY, TAIL GATE, LH						
8008-		BJ60,HJ60,FJ60			65707-90A00-	1	455	
		67207A STOPPER SUB-ASSY, BACK DOOR, RH						
8008-		BJ60,HJ60,FJ60			67207-90A00-	1	455	
		67209A STOPPER SUB-ASSY, BACK DOOR, LH						
8008-		BJ60,HJ60,FJ60			67209-90A00-	1	455	
		67286 ANTI-RATTLE, BACK DOOR, RH						
8008-		BJ60,HJ60,FJ60			67285-90A00-	1	455	
		67287 ANTI-RATTLE, BACK DOOR, LH						
8008-		BJ60,HJ60,FJ60			67286-90A00-	1	455	
		68810 HINGE ASSY, BACK DOOR, UPPER						
8008-		BJ60,HJ60,FJ60			68810-90A00-	2	455	
		68820 HINGE ASSY, BACK DOOR, LOWER						
8008-		BJ60,HJ60,FJ60			66110-90A00-	2	455	
		68868 SEAL, BACK DOOR HINGE						
8009-		BJ60,HJ60,FJ60			68868-90A00-	2		
		68961 BOLT, BACK DOOR STAY						
C	8008-8512	BJ60,HJ60,FJ60			68961-12010-	4	455	
C	8512-	HJ60,FJ60			68961-23010-	4		
		68970 STAY ASSY, BACK DOOR, RH						
8008-		BJ60,HJ60,FJ60	W/O REAR WIPER		68950-69015-	1	455	

GENUINE TOYOTA PARTS

PROD.DATE	MODELS	DESCRIPTION	R/P	PART NUMBER	QTY	REV.REF.CODE FROM	REV.REF.CODE UP TO
	68970 STAY ASSY, BACK DOOR, RH CONTINUED						
8008-	BJ60,HJ60,FJ60	W/REAR WIPER		68950-69025-	1	455	
	68980 STAY ASSY, BACK DOOR, LH						
8008-	BJ60,HJ60,FJ60	W/O REAR WIPER		68950-69015-	1	455	
8008-	BJ60,HJ60,FJ60	W/REAR WIPER		68950-69025-	1	455	
	69289 SHIM, BACK DOOR STOPPER						
8008-	BJ60,HJ60,FJ60			69289-90A00-	2	455	
	69313 WIRE, TAIL GATE LOCK, NO.1						
8008-	BJ60,HJ60,FJ60			69764-90A00-	1	455	
	69314 WIRE, TAIL GATE LOCK, NO.2						
8008-	BJ60,HJ60,FJ60			69705-90A00-	1	455	
	69315 WIRE, TAIL GATE LOCK, NO.3						
8008-	BJ60,HJ60,FJ60			69767-90A00-	1	455	
	69350 LOCK ASSY, BACK DOOR						
8008-8503	BJ60,FJ60			69350-90A02-	1	455	564
8503-	BJ60,HJ60,FJ60			69350-90A03-	1	565	
	69360 LINK ASSY, TAIL GATE REMOTE CONTROL						
8008-8103	BJ60,FJ60		#	69690-90A00- (69690-90A01-)	1	455	
8103-	BJ60,HJ60,FJ60			69690-90A01-	1		
	69380A LOCK ASSY, TAIL GATE, LOWER RH						
8008-	BJ60,HJ60,FJ60			69380-90A00-	1	455	
	69390A LOCK ASSY, TAIL GATE, LOWER LH						
8008-	BJ60,HJ60,FJ60			69390-90A00-	1	455	
	69450A STRIKER ASSY, TAIL GATE, LOWER RH						
8008-	BJ60,HJ60,FJ60			69450-90A00-	1	455	

	PROD.DATE	MODELS	DESCRIPTION	R/P	PART NUMBER	QTY	REV.REF.CODE FROM	REV.REF.CODE UP TO
		69460A STRIKER ASSY, TAIL GATE, LOWER LH						
	8008-	BJ60,HJ60,FJ60			69460-90A00-	1	455	
		69490 STRIKER ASSY, BACK DOOR LUCK						
	8008-	BJ60,HJ60,FJ60			69430-90A01-	1	455	
		69722 PAD, BACK DOOR LOCK CONTROL						
	8411-	BJ60,HJ60			69722-90A00-	1	515	
C	8604-	FJ60				1	573	
		69747D BUTTON, DOOR LOCKING (FOR TAIL GATE						
	8008-8411	BJ60,FJ60			# 69747-20020- (69747-20020-01)	1	455	514
C	8411-	BJ60,HJ60,FJ60	BLACK		69747-20020-01	1	515	554
		69749C CLAMP, TAIL GATE LOCK LINK						
	8008-	BJ60,HJ60,FJ60			69749-12010-	1	455	
		69751 HOLDER, DOOR LOCK CONTROL KNOB						
	8411-8503	BJ60	SEPIA BROWN		69751-20031-26	1	515	
C	8008-8201	BJ60,FJ60	BLACK		# 69751-20030-01 (69751-20031-01)	1	455	
	8201-8411	BJ60,FJ60	DARK BROWN		69751-20031-06	1		514
	8210-8503	BJ60,FJ60	SHADOW GRAY		69751-20031-03	1	467	
	8411-8503	FJ60	DARK BROWN		69751-20031-06	1	515	
		69775 BUTTON, DOOR LOCKING (FOR BACK DOOR)						
	8008-8011	BJ60,FJ60	DARK BROWN		69741-20020-16	1	455	
	8011-8411	BJ60,FJ60	DARK BROWN		69741-90A00-06	1		514
	8210-8503	BJ60,FJ60	SHADOW GRAY		69741-90A00-03	1	467	564
	8411-8503	BJ60,FJ60	SEPIA BROWN		69741-90A00-16	1	515	564
	8503-	BJ60,HJ60,FJ60	SHADOW GRAY		69706-90A00-03	1	565	
	8503-	BJ60,HJ60,FJ60	SEPIA BROWN		69706-90A00-06	1	565	

GENUINE TOYOTA PARTS

PROD.DATE	MODELS	DESCRIPTION	R/P	PART NUMBER	QTY	REV.REF.CODE FROM	REV.REF.CODE UP TO
	75416 HANDLE, TAIL GATE, INSIDE						
8008-8101	BJ60,FJ60			# 75416-95661- (75416-95691-)	1	455	
8101-	BJ60,HJ60,FJ60			69212-90A00-	1		
	75416A BUSH, TAIL GATE INSIDE HANDLE						
8008-	BJ60,HJ60,FJ60			75415-95660-	1	455	

GENUINE TOYOTA PARTS

PROD.DATE	MODELS	DESCRIPTION	R/P	PART NUMBER	QTY	REV.REF.CODE FROM	REV.REF.CODE UP TO

FIG.67-65 LOCK CYLINDER SET

(8008-)

GENUINE TOYOTA PARTS

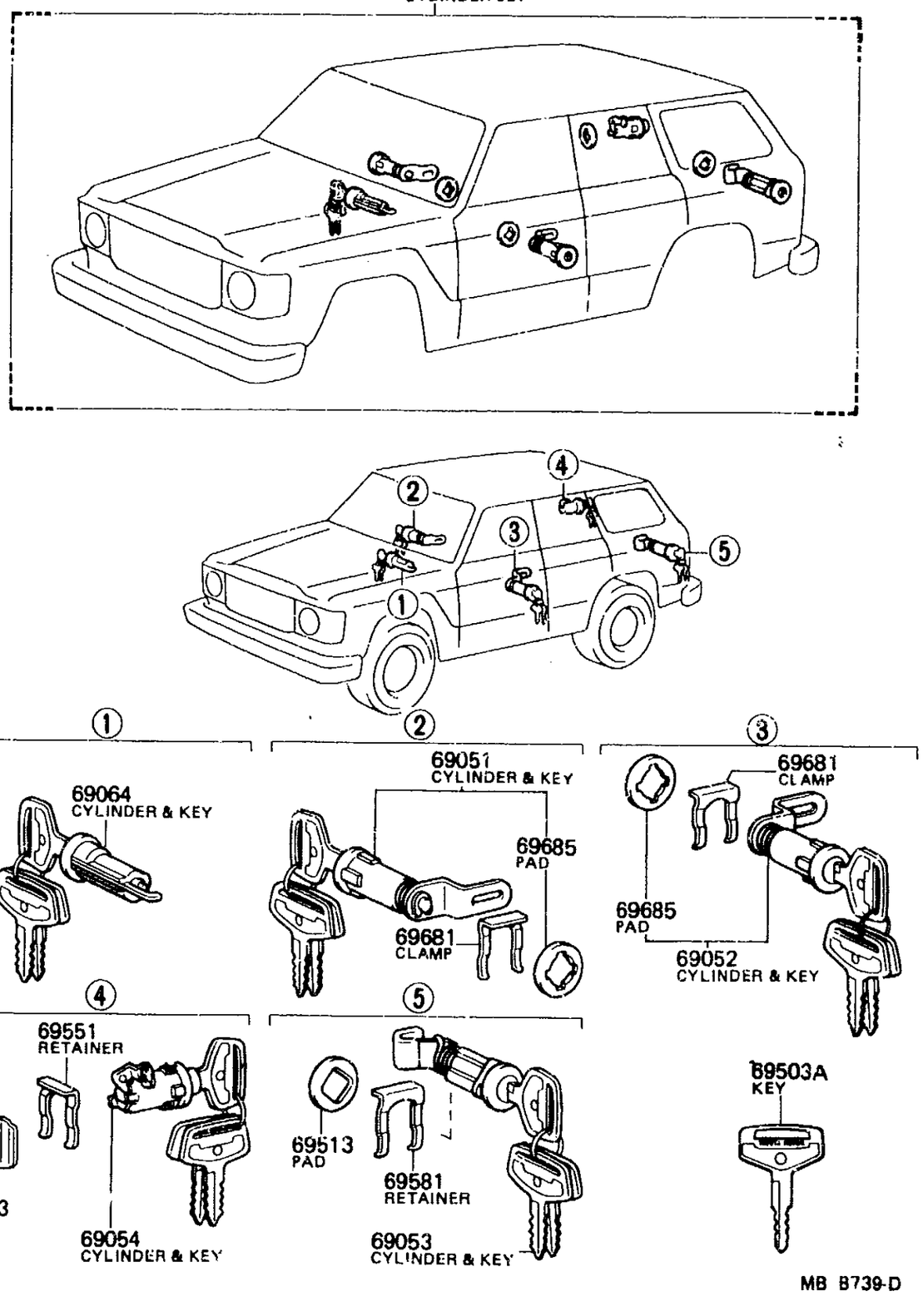

	PROD.DATE	MODELS	DESCRIPTION	R/P	PART NUMBER	QTY	REV.REF.CODE FROM	REV.REF.CODE UP TO
	FIG.	67-65 LOCK CYLINDER SET						
		69051 CYLINDER AND KEY SET, DOOR LOCK, RH						
	8008-8210	BJ60,FJ60			69051-90A00-	1	455	466
	8210-	BJ60,HJ60,FJ60			69051-90A03-	1	467	
		69052 CYLINDER AND KEY SET, DOOR LOCK, LH						
	8008-8210	BJ60,FJ60			69052-90A00-	1	455	466
	8210-	BJ60,HJ60,FJ60			69052-90A03-	1	467	
		69053 CYLINDER AND KEY SET, FUEL INLET LOCK						
	8008-8210	BJ60,FJ60			69058-19065-	1	455	466
	8210-	BJ60,HJ60,FJ60			69058-90A02-	1	467	
		69054 CYLINDER AND KEY SET, BACK DOOR LOCK						
	8008-8210	BJ60,FJ60			69055-90A00-	1	455	466
	8210-	BJ60,HJ60,FJ60			69055-90A06-	1	467	
		69064 CYLINDER AND KEY SET, IGNITION SWITCH LOCK						
	8008-8110	BJ60			69057-90A00-	1	455	458
	8110-8210	BJ60,FJ60			* 69057-14010- (69057-22020-)	1	459	466
	8210-	BJ60,HJ60,FJ60			69057-90A05-	1	467	
	8008-8110	FJ60			* 69057-14010- (69057-22020-)	1	455	458
		69503 CYLINDER SET, LOCK						
	8008-8110	BJ60			69005-90A00-	1	455	458
	8110-8309	BJ60,FJ60			* 69005-90A04- (69005-90A17-)	1	459	486
C	8309-8608	BJ60,HJ60,FJ60			69005-90A17-	1	487	600
	8008-8110	FJ60			* 69005-90A04- (69005-90A17-)	1	455	458
C	8608-	FJ60			69005-90A17-	1	601	
C	8608-	HJ60			69005-90A36-	1	601	
		69503A KEY, BLANK						
	8008-8210	BJ60	W/IGNISION		90999-00072-	1	455	466

GENUINE TOYOTA PARTS

	PROD.DATE	MODELS	DESCRIPTION	R/P	PART NUMBER	QTY	REV.REF.CODE FROM	REV.REF.CODE UP TO
		69503A KEY, BLANK CONTINUED						
	8008-8210	BJ60,FJ60	EXCL/IGNISION		90999-00066-	1	455	466
	8210-	BJ60,HJ60,FJ60				1	467	
	8008-8210	FJ60	W/IGNISION			1	455	466
C	8210-	HJ60,FJ60	W/PROTECTOR		90999-00104-	1	467	
		69513 PAD, FUEL FILLER LID LOCK CYLINDER						
	8008-	BJ60,HJ60,FJ60			69513-14010-	1	455	
		69551 RETAINER, BACK DOOR LOCK CYLINDER						
	8008-	BJ60,HJ60,FJ60			69551-13020-	1	455	
		69563 PAD, BACK DOOR LOCK CYLINDER						
	8008-	BJ60,HJ60,FJ60			69563-90A00-	1	455	
		69581 RETAINER, FUEL FILLER LID CYLINDER						
	8008-	BJ60,HJ60,FJ60			69581-14010-	1	455	
		69681 CLAMP, DOOR LOCK CYLINDER AND SLEEVE						
	8008-	BJ60,HJ60,FJ60			69681-20040-	2	455	
		69685 PAD, LOCK CYLINDER						
	8008-	BJ60,HJ60,FJ60			69513-90A00-	2	455	

(8008–)

FR (SP)

71430S BACK
71073S COVER
71812 RING
90523-08001
90386-12005
71071S COVER
71812 RING
71410S CUSHION
71950 HEADREST
71956A SUPPORT
71956A SUPPORT
71440S BACK
71074S COVER
71812 RING
71072S COVER
71812 RING
71420S CUSHION
72110S TRACK
90119-08079 (4)
*1 91666-61030
*2 91665-61030
*3 90119-10406
72130S TRACK
*1 91666-61030
*2 91665-61030
*3 90119-10406
72145A
90119-10406 (2)
72510(RH) 72520(LH) ADJUSTER
90119-10037 (4)
72524 HANDLE
72537(RH) 72538(LH) COVER
90154-80004
93540-55010
72140S TRACK
90119-08079 (4)
*1 91666-61030
*2 91665-61030
*3 90119-10406
72146A
90119-10406 (2)
*1 91666-61030
*2 91665-61030
*3 90119-10406
72120S TRACK

*1 (8008–8411)
*2 (8411–8510)
*3 (8510–)

MB B666-I

MBB666I

(8008–8110)

FR (BN)

71430B BACK
71073B COVER
71812 RING
90523-08001
90386-12005
71071B COVER
71812 RING
71410B CUSHION
71024 SUPPORT
90119-10037 (4)
71950 HEADREST
71956A SUPPORT
71956A SUPPORT
71430B BACK
71073B COVER
71812 RING
71071B COVER
71812 RING
71410B CUSHION
72110B TRACK
90119-08079 (6)
90119-08080 (2)
91666-61030
91666-61030
72130B TRACK
72510(RH) 72520(LH) ADJUSTER
90119-10037
72524 HANDLE
72537(RH) 72538(LH) COVER
90154-80004
93540-55010
72140B TRACK
90119-08079 (6)
90119-08080 (2)
91666-61030
91666-61030
72120B TRACK

MB B740-C

MBB740G

(8008-)

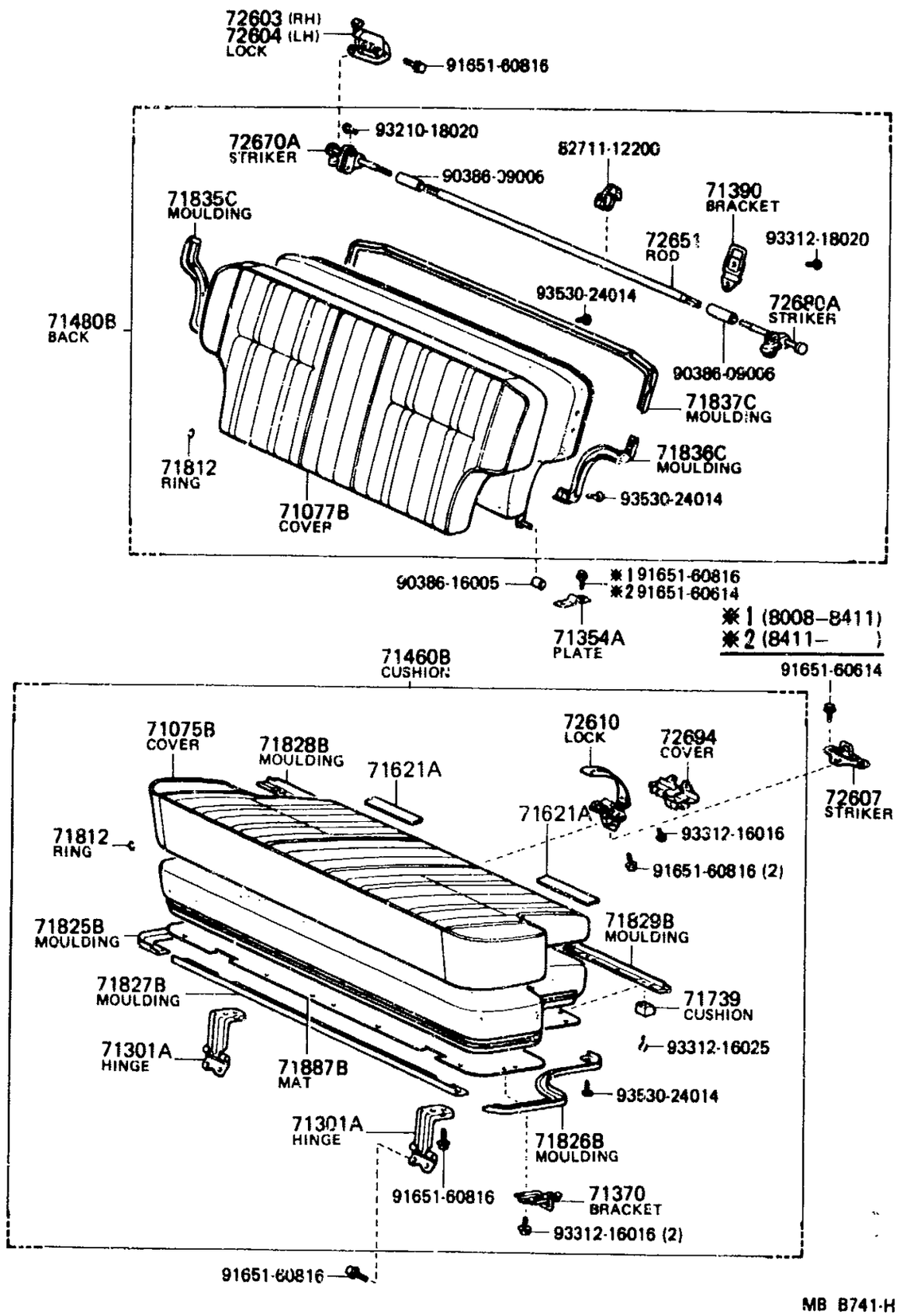

MB B741-H

GENUINE TOYOTA PARTS

	PROD.DATE	MODELS	DESCRIPTION	R/P	PART NUMBER	QTY	REV.REF.CODE FROM	REV.REF.CODE UP TO
	FIG.	71-51 SEAT & SEAT TRACK						
		71024	PLATE SUB-ASSY, FRONT SEAT HINGE, LH					
C	8008-8110	BJ60,FJ60			71023-90A02-	1	455	458
		71071B	COVER, FRONT SEAT CUSHION (FOR BENCH TYPE)					
	8008-8110	BJ60,FJ60..WGV	VL,LH	#	71071-90A00- (71071-90A00-06)	1	455	458
	8008-8110	BJ60,FJ60..WGV	VL,RH	#	71071-90A04- (71071-90A04-06)	1	455	458
	8008-8110	FJ60..WGG	FB,LH		71071-90A02-06	1	455	458
	8008-8110	FJ60..WGG	FB,RH		71071-90A07-	1	455	458
		71071S	COVER, FRONT SEAT CUSHION, RH (FOR SEPARATE TYPE)					
	8411-8504	BJ60	FB,SEPIA BROWN		71071-90A02-16	1	515	554
	8110-8411	BJ60,FJ60	FB,BROWN		71071-90A02-06	1	459	514
	8008-8110	BJ60,FJ60..WGV	VL	#	71071-90A00- (71071-90A00-06)	1	455	458
C	8210-8608	BJ60,HJ60,FJ60	FB,BLACK		71071-90A02-01	1	467	600
C	8504-8608	BJ60,HJ60,FJ60	FB,SEPIA BROWN		71071-90A02-16	1	555	600
	8411-8504	FJ60	FB,BROWN		71071-90A02-06	1	515	554
	8008-8110	FJ60..WGG	FB			1	455	458
C	8608-	HJ60,FJ60	FB,BLACK		71071-90A35-01	1	601	
C	8608-	HJ60,FJ60	FB,BROWN		71071-90A35-06	1	601	
		71072S	COVER, FRONT SEAT CUSHION, LH (FOR SEPARATE TYPE)					
	8411-8504	BJ60	FB,SEPIA BROWN		71072-90A07-16	1	515	554
	8110-8408	BJ60,FJ60	FB,BROWN		71071-90A02-06	1	459	
	8210-8408	BJ60,FJ60	FB,BLACK		71071-90A02-01	1	467	
	8408-8411	BJ60,FJ60	FB,BROWN		71072-90A07-06	1		514
	8008-8110	BJ60,FJ60..WGV	VL	#	71071-90A00- (71071-90A00-06)	1	455	458
C	8408-8608	BJ60,HJ60,FJ60	FB,BLACK		71072-90A07-01	1		600
C	8504-8608	BJ60,HJ60,FJ60	FB,SEPIA BROWN		71072-90A07-16	1	555	600
	8411-8504	FJ60	FB,BROWN		71072-90A07-06	1	515	554

GENUINE TOYOTA PARTS

	PROD.DATE	MODELS	DESCRIPTION	R/P	PART NUMBER	QTY	REV.REF.CODE FROM	REV.REF.CODE UP TO
		71072S CONTINUED COVER, FRONT SEAT CUSHION, LH (FOR SEPARATE TYPE)						
	8008-8110	FJ60••WGG	FB		71071-90A02-06	1	455	458
C	8608-	HJ60,FJ60	FB,GRAY		71072-90A18-03	1	601	
C	8608-	HJ60,FJ60	FB,BROWN		71072-90A18-06	1	601	
		71073B COVER, FRONT SEAT BACK (FOR BENCH TYPE)						
	8008-8110	BJ60•FJ60••WGV	VL,LH	#	71073-90A04- (71073-90A04-06)	1	455	458
	8008-8110	BJ60,FJ60••WGV	VL,RH	#	71073-90A14- (71073-90A14-06)	1	455	458
	8008-8110	FJ60••WGG	FB,LH		71073-90A06-06	1	455	458
	8008-8110	FJ60••WGG	FB,RH		71073-90A16-	1	455	458
		71073S COVER, FRONT SEAT BACK, RH (FOR SEPARATE TYPE)						
	8411-8504	BJ60	FB,SEPIA BROWN		71073-90A05-16	1	515	554
	8110-8411	BJ60,FJ60	FB,BROWN		71073-90A06-06	1	459	514
	8008-8110	BJ60,FJ60••WGV	VL	#	71073-90A04- (71073-90A04-06)	1	455	458
C	8210-8608	BJ60,HJ60,FJ60	FB,BLACK		71073-90A06-01	1	467	600
C	8504-8608	BJ60,HJ60,FJ60	FB,SEPIA BROWN		71073-90A06-16	1	555	600
	8411-8504	FJ60	FB,BROWN		71073-90A06-06	1	515	554
	8008-8110	FJ60••WGG	FB			1	455	458
C	8608-	HJ60,FJ60	FB,GRAY		71073-90A44-03	1	601	
C	8608-	HJ60,FJ60	FB,BROWN		71073-90A44-06	1	601	
		71074S COVER, FRONT SEAT BACK, LH (FOR SEPARATE TYPE)						
	8411-8504	BJ60	FB,SEPIA BROWN		71073-90A06-16	1	515	554
	8110-8411	BJ60,FJ60	FB,BROWN		71073-90A06-06	1	459	514
	8008-8110	BJ60,FJ60••WGV	VL	#	71073-90A04- (71073-90A04-06)	1	455	458
C	8210-8608	BJ60,HJ60,FJ60	FB,BLACK		71073-90A06-01	1	467	600
C	8504-8608	BJ60,HJ60,FJ60	FB,SEPIA BROWN		71073-90A06-16	1	555	600
	8411-8504	FJ60	FB,BROWN		71073-90A06-06	1	515	554
	8008-8110	FJ60••WGG	FB			1	455	458

GENUINE TOYOTA PARTS

	PROD.DATE	MODELS	DESCRIPTION	R/P	PART NUMBER	QTY	REV.REF.CODE FROM	REV.REF.CODE UP TO
		71074S CONTINUED COVER, FRONT SEAT BACK, LH (FOR SEPARATE TYPE)						
C	8608-	HJ60,FJ60	FB,GRAY		71073-90A44-03	1	601	
C	8608-	HJ60,FJ60	FB,BROWN		71073-90A44-06	1	601	
		71075B COVER, REAR SEAT CUSHION (FOR BENCH TYPE)						
	8411-8504	BJ60	FB,SEPIA BROWN		71075-90A02-16	1	515	554
	8110-8411	BJ60,FJ60	FB,BROWN		71075-90A02-06	1	459	514
	8008-8110	BJ60,FJ60••WGV	VL,D-BROWN		71075-90A00-06	1	455	458
C	8210-8604	BJ60,HJ60,FJ60	FB,BLACK		71075-90A02-01	1	467	572
C	8504-8604	BJ60,HJ60,FJ60	FB,SEPIA BROWN		71075-90A02-16	1	555	572
	8411-8504	FJ60	FB,BROWN		71075-90A02-06	1	515	554
C	8604-8608	FJ60	FB,BLACK		71075-90A14-01	1	573	600
C	8604-8608	FJ60	FB,BEIGE		71075-90A14-05	1	573	600
	8008-8110	FJ60••WGG	FB		71075-90A02-06	1	455	458
C	8604-8608	HJ60	FB,BLACK		71075-90A02-01	1	573	600
C	8604-	HJ60	FB,SEPIA BROWN		71075-90A02-16	1	573	
C	8608-	HJ60,FJ60	FB,GRAY		71075-90A18-03	1	601	
C	8608-	HJ60,FJ60	FB,BROWN		71075-90A18-06	1	601	
		71077B COVER, REAR SEAT BACK (FOR BENCH TYPE)						
	8411-8504	BJ60	FB,SEPIA BROWN		71077-90A20-16	1	515	554
	8110-8307	BJ60,FJ60	FB,BROWN		71077-90A02-06	1	459	
	8210-8307	BJ60,FJ60	FB,BLACK		71077-90A02-01	1	467	
	8307-8411	BJ60,FJ60	FB,BROWN		71077-90A20-06	1		514
	8008-8110	BJ60,FJ60••WGV	VL		71077-90A00-	1	455	458
C	8307-8608	BJ60,HJ60,FJ60	FB,BLACK		71077-90A20-01	1		600
C	8504-8608	BJ60,HJ60,FJ60	FB,SEPIA BROWN		71077-90A20-16	1	555	600
	8411-8504	FJ60	FB,BROWN		71077-90A20-06	1	515	554
	8008-8110	FJ60••WGG	FB		71077-90A02-06	1	455	458
C	8608-	HJ60,FJ60	FB,GRAY		71077-90A41-03	1	601	
C	8608-	HJ60,FJ60	FB,BROWN		71077-90A41-06	1	601	

GENUINE TOYOTA PARTS

	PROD.DATE	MODELS	DESCRIPTION	R/P	PART NUMBER	QTY	REV.REF.CODE FROM	REV.REF.CODE UP TO
		71301A HINGE SUB-ASSY, REAR SEAT CUSHION						
	8008-	BJ60,HJ60,FJ60			71301-90A00-	2	455	
		71354A PLATE, REAR SEAT BACK SET						
	8008-	BJ60,HJ60,FJ60			71354-90A00-	2	455	
		71370 BRACKET SUB-ASSY, REAR SEAT CUSHION HOLDER						
	8008-	BJ60,HJ60,FJ60			71307-90A00-	2	455	
		71390 BRACKET SUB-ASSY, REAR SEAT BACK HOLDER						
	8008-	BJ60,HJ60,FJ60			71309-90A00-	2	455	
		71410B CUSHION ASSY, FRONT SEAT (FOR BENCH TYPE)						
	8008-8110	BJ60,FJ60••WGV	VL,RH	#	71410-90A05- (71410-90A05-06)	1	455	458
	8008-8110	BJ60,FJ60••WGV	VL,LH	#	71420-90A02- ┌(71420-90A08-) •(90523-08001-)	1	455	458
	8008-8104	FJ60••WGG	FB,LH	#	71420-90A00- ┌(71420-90A06-) •(90523-08001-)	1	455	
	8008-8110	FJ60••WGG	FB,RH		71410-90A04-	1	455	458
	8104-8110	FJ60••WGG	FB,LH,DARK BROWN		71420-90A06-05	1		458
		71410S CUSHION ASSY, FRONT SEAT, RH (FOR SEPARATE TYPE)						
	8411-8504	BJ60	FB,SEPIA BROWN		71410-90A08-16	1	515	554
	8110-8411	BJ60,FJ60	FB,BROWN		71410-90A08-06	1	459	514
	8008-8104	BJ60,FJ60••WGV	VL	#	71410-90A02- ┌(71410-90A10-) •(90523-08001-)	1	455	
	8104-8110	BJ60,FJ60••WGV	VL	#	71410-90A10- (71410-90A10-06)	1		458
C	8210-8608	BJ60,HJ60,FJ60	FB,BLACK		71410-90A08-01	1	467	600
C	8504-8608	BJ60,HJ60,FJ60	FB,SEPIA BROWN		71410-90A08-16	1	555	600
	8411-8504	FJ60	FB,BROWN		71410-90A08-06	1	515	554
	8008-8104	FJ60••WGG	FB	#	71410-90A00- ┌(71410-90A08-) •(90523-08001-)	1	455	
		71410S CUSHION ASSY, FRONT SEAT, RH (FOR SEPARATE TYPE) CONTINUED						
	8104-8110	FJ60••WGG	FB		71410-90A08-06	1		458
C	8608-	HJ60,FJ60	FB,GRAY		71410-90A33-03	1	601	
C	8608-	HJ60,FJ60	FB,BROWN		71410-90A33-06	1	601	
		71420S CUSHION ASSY, FRONT SEAT, LH (FOR SEPARATE TYPE)						
	8411-8504	BJ60	FB,SEPIA BROWN		71420-90A06-16	1	515	554
	8110-8411	BJ60,FJ60	FB,BROWN		71420-90A06-06	1	515	554
	8008-8104	BJ60,FJ60••WGV	VL	#	71420-90A02- ┌(71420-90A08-) •(90523-08001-)	1	455	
	8104-8110	BJ60,FJ60••WGV	VL	#	71420-90A08- (71420-90A08-06)	1		458
C	8210-8608	BJ60,HJ60,FJ60	FB,BLACK		71420-90A06-01	1	467	600
C	8504-8608	BJ60,HJ60,FJ60	FB,SEPIA BROWN		71420-90A06-16	1	555	600
	8411-8504	FJ60	FB,BROWN		71420-90A06-06	1	515	554
	8008-8104	FJ60••WGG	FB	#	71420-90A00- ┌(71420-90A06-) •(90523-08001-)	1	455	
	8104-8110	FJ60••WGG	FB		71420-90A06-06	1		458
C	8608-	HJ60,FJ60	FB,GRAY		71420-90A31-03	1	601	
C	8608-	HJ60,FJ60	FB,BROWN		71420-90A31-06	1	601	
		71430B BACK ASSY, FRONT SEAT (FOR BENCH TYPE)						
	8008-8110	BJ60,FJ60••WGV	VL,RH	#	71430-90A08- (71430-90A08-06)	1	455	458
	8008-8110	BJ60,FJ60••WGV	VL,LH	#	71440-90A01- (71440-90A01-06)	1	455	458
	8008-8110	FJ60••WGG	FB,RH		71430-90A10-	1	455	458
	8008-8110	FJ60••WGG	FB,LH,DARK BROWN		71440-90A00-06	1	455	458
		71430S BACK ASSY, FRONT SEAT, RH (FOR SEPARATE TYPE)						
	8411-8504	BJ60	FB,SEPIA BROWN		71430-90A00-16	1	515	554
	8110-8411	BJ60,FJ60	FB,BROWN		71430-90A00-06	1	459	514
	8008-8110	BJ60,FJ60••WGV	VL	#	71430-90A01- (71430-90A01-06)	1	455	458

GENUINE TOYOTA PARTS

	PROD.DATE	MODELS	DESCRIPTION	R/P	PART NUMBER	QTY	REV.REF.CODE FROM	REV.REF.CODE UP TO
		71430S BACK ASSY, FRONT SEAT, RH (FOR SEPARATE TYPE) CONTINUED						
C	8210-8608	BJ60,HJ60,FJ60	FB,BLACK		71430-90A00-01	1	467	600
C	8504-8608	BJ60,HJ60,FJ60	FB,SEPIA BROWN		71430-90A00-16	1	555	600
	8411-8504	FJ60	FB,BROWN		71430-90A00-06	1	515	554
	8008-8110	FJ60..WGG	FB			1	455	458
C	8608-	HJ60,FJ60	FB,BROWN		71430-90A39-06	1	601	
		71440S BACK ASSY, FRONT SEAT, LH (FOR SEPARATE TYPE)						
	8411-8504	BJ60	FB,SEPIA BROWN		71440-90A00-16	1	515	554
	8110-8411	BJ60,FJ60	FB,BROWN		71440-90A00-06	1	459	514
	8008-8110	BJ60,FJ60..WGV	VL	#	71440-90A01- (71440-90A01-06)	1	455	458
C	8210-8608	BJ60,HJ60,FJ60	FB,BLACK		71440-90A00-01	1	467	600
C	8504-8608	BJ60,HJ60,FJ60	FB,SEPIA BROWN		71440-90A00-16	1	555	600
	8411-8504	FJ60	FB,BROWN		71440-90A00-06	1	515	554
	8008-8110	FJ60..WGG	FB			1	455	458
C	8608-	HJ60,FJ60	FB,GRAY		71440-90A37-03	1	601	
C	8608-	HJ60,FJ60	FB,BROWN		71440-90A37-06	1	601	
		71460B CUSHION ASSY, REAR SEAT (FOR BENCH TYPE)						
	8411-8504	BJ60	FB,SEPIA BROWN		71460-90A02-16	1	515	554
	8110-8411	BJ60,FJ60	FB,BROWN		71460-90A02-06	1	459	514
	8008-8110	BJ60,FJ60..WGV	VL	#	71460-90A00- (71460-90A00-06)	1	455	458
C	8210-8604	BJ60,HJ60,FJ60	FB,BLACK		71460-90A02-01	1	467	572
C	8504-8604	BJ60,HJ60,FJ60	FB,SEPIA BROWN		71460-90A02-16	1	555	572
	8411-8504	FJ60	FB,BROWN		71460-90A02-06	1	515	554
C	8604-8608	FJ60	FB,BLACK		71460-90A70-01	1	573	600
C	8604-8608	FJ60	FB,BEIGE		71460-90A70-05	1	573	600
	8008-8110	FJ60..WGG	FB		71460-90A02-06	1	455	458
C	8604-8608	HJ60	FB,BLACK		71460-90A02-01	1	573	600

	PROD.DATE	MODELS	DESCRIPTION	R/P	PART NUMBER	QTY	REV.REF.CODE FROM	REV.REF.CODE UP TO
		71460B CUSHION ASSY, REAR SEAT (FOR BENCH TYPE) CONTINUED						
C	8604-8608	HJ60	FB,SEPIA BROWN		71460-90A02-16	1	573	600
C	8608-	HJ60,FJ60	FB,GRAY		71460-90A76-03	1	601	
C	8608-	HJ60,FJ60	FB,BROWN		71460-90A76-06	1	601	
		71480B BACK ASSY, REAR SEAT (FOR BENCH TYPE)						
	8411-8504	BJ60	FB,SEPIA BROWN		71480-90A02-16	1	515	554
	8110-8411	BJ60,FJ60	FB,BROWN		71480-90A02-06	1	459	514
C	8210-8604	BJ60,FJ60	FB,BLACK		71480-90A02-01	1	467	572
C	8504-8604	BJ60,FJ60	FB,SEPIA BROWN		71480-90A02-16	1	555	572
	8008-8110	BJ60,FJ60..WGV	VL	#	71480-90A00- (71480-90A00-06)	1	455	458
	8411-8504	FJ60	FB,BROWN		71480-90A02-06	1	515	554
C	8604-8608	FJ60	FB,BLACK		71480-90A80-01	1	573	600
C	8604-8608	FJ60	FB,BEIGE		71480-90A80-05	1	573	600
	8008-8110	FJ60..WGG	FB		71480-90A02-06	1	455	458
C	8510-8608	HJ60	FB,BLACK		71480-90A64-01	1	567	600
C	8510-8608	HJ60	FB,SEPIA BROWN		71480-90A64-06	1	567	600
C	8608-	HJ60,FJ60	FB,GRAY		71480-90A90-03	1	601	
C	8608-	HJ60,FJ60	FB,BROWN		71480-90A90-06	1	601	
		71621A PAD, REAR SEAT CUSHION SILENCER, A						
C	8604-	FJ60			71521-90K00-	2	573	
C	8510-	HJ60				2	567	
		71739 CUSHION, SEAT SUPPORT						
	8008-	BJ60,HJ60,FJ60			71739-90A00-	3	455	
		71812 RING, HOG, SMALL						
	8411-8504	BJ60			90468-18071-	33	515	554
	8008-8411	BJ60,FJ60			71812-30010-	33	455	514
	8504-	BJ60,HJ60,FJ60			90468-18071-	33	555	
	8411-8504	FJ60			71812-30010-	33	515	554

PROD.DATE	MODELS	DESCRIPTION	R/F	PART NUMBER	QTY	REV.REF.CODE FROM	REV.REF.CODE UP TO
	77743C HOSE, FUEL, NO.3 (FOR OUTER VENT VALVE TO CARBURETOR)						
8008-	FJ60..WGG			77759-14011-	1	455	
	77744 TUBE, CANISTER TO V.S.V.						
8008-	FJ60..WGG			77265-60020-	1	455	
	77744A HOSE, FUEL, NO.1 (FOR CANISTER TO V.S.V.)						
8008-	FJ60..WGG	*H,L=240		95332-06030-	1	455	
	77744B HOSE, FUEL, NO.2 (FOR CANISTER TO V.S.V.)						
8008-	FJ60..WGG	*H,L=440		95332-06060-	1	455	
8011-	FJ60..WGG	*H,L=420			1		
	77752 BRACKET, CHARCOAL CANISTER SUPPORT						
8008-	FJ60..WGG			77751-60020-	1	455	

PROD.DATE	MODELS	DESCRIPTION	R/P	PART NUMBER	QTY	REV.REF.CODE FROM	REV.REF.CODE UP TO

* H, L = Cut hose to length as specified in remarks

(8008-8411)BJ60

(8411-)BJ60

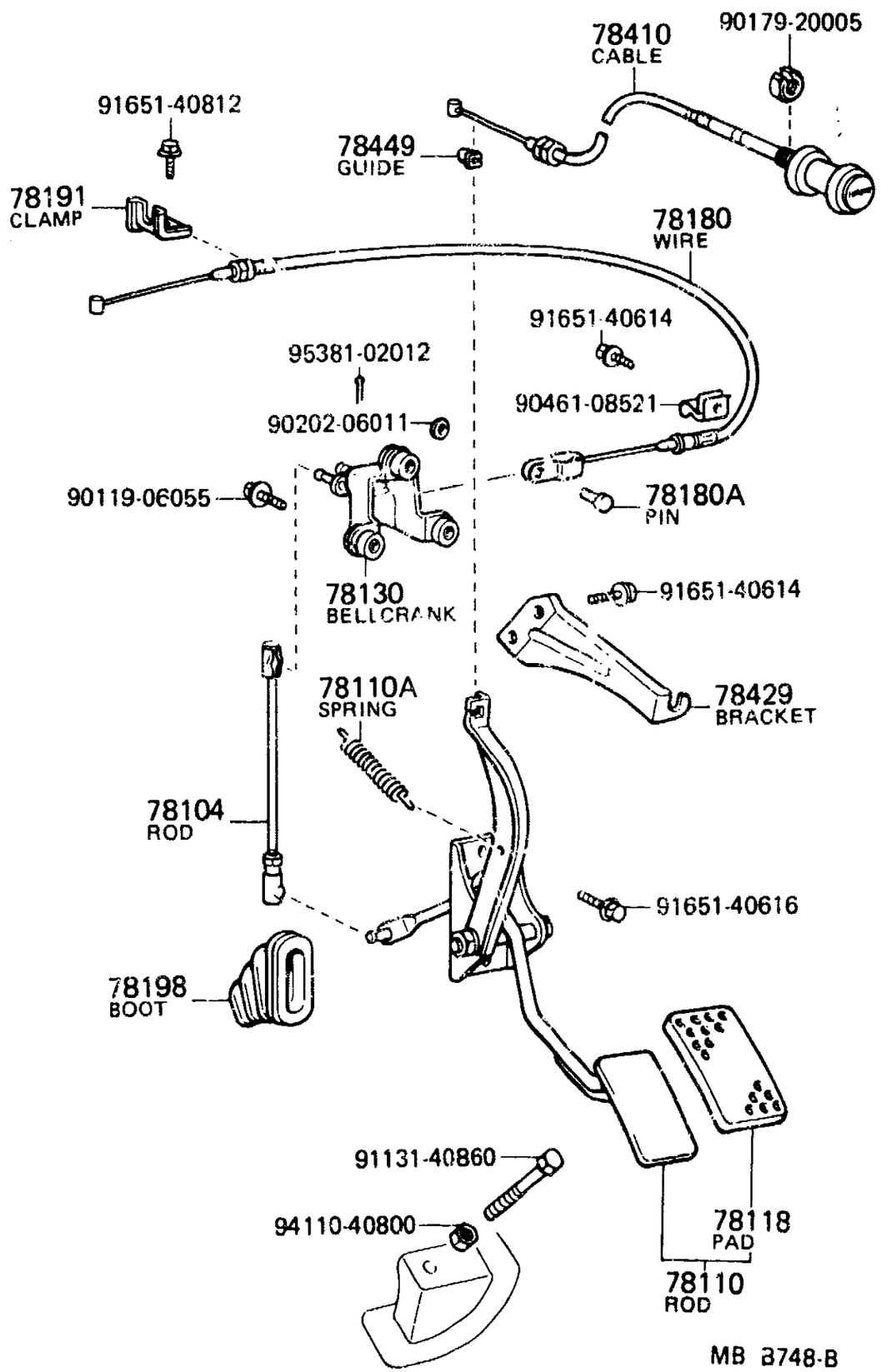

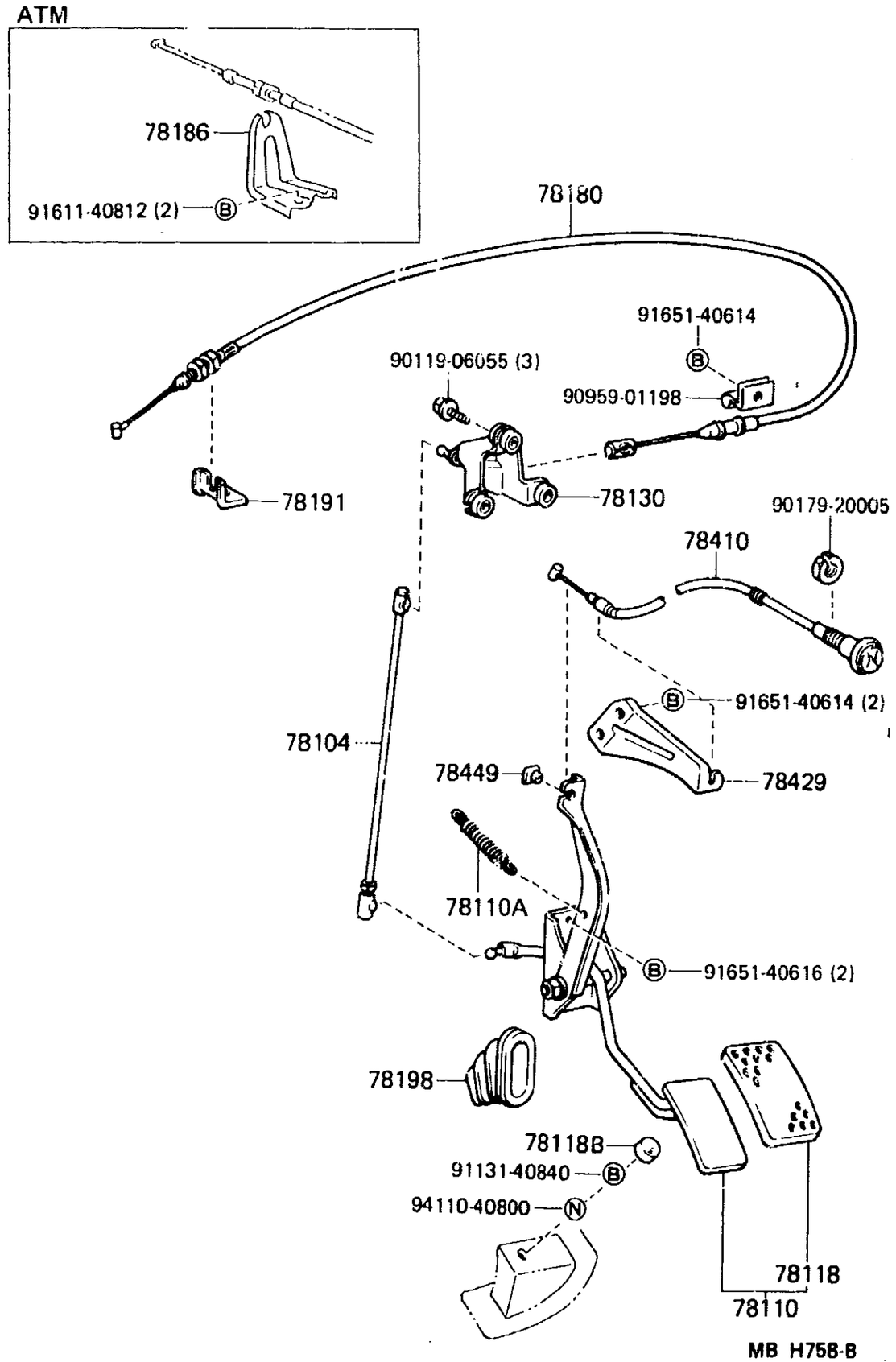

MR4-13-0283

FIG•78-51 ACCELERATOR LINK

(8008-)FJ60

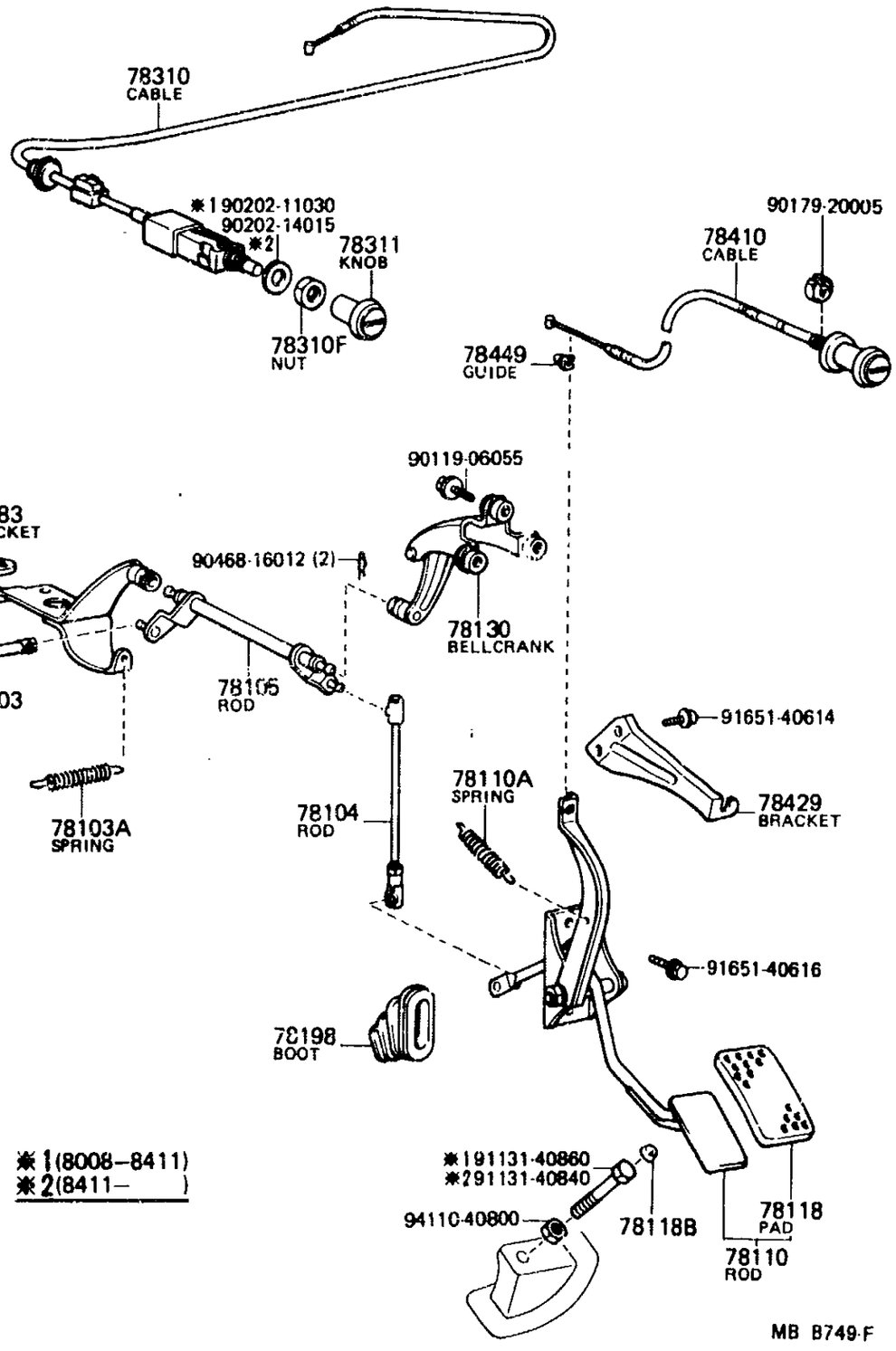

GENUINE TOYOTA PARTS

PROD.DATE	MODELS	DESCRIPTION	R/P	PART NUMBER	QTY	REV.REF.CODE FROM	REV.REF.CODE UP TO
FIG.	78-51 ACCELERATOR LINK						
	78103	ROD SUB-ASSY, ACCELERATOR CONNECTING, NO.1					
8008-	FJ60			78103-90A00-	1	455	
	78103A	SPRING (FOR ACCELERATOR CONNECTING ROD, NO.1)					
8008-	FJ60			90506-12034-	1	455	
	78104	ROD SUB-ASSY, ACCELERATOR CONNECTING, NO.2					
8008-	BJ60,HJ60			78104-90A01-	1	455	
8008-	FJ60			78104-90A00-	1	455	
	78105	ROD SUB-ASSY, ACCELERATOR CONNECTING, NO.3					
8008-	FJ60			78105-90A00-	1	455	
	78110	ROD ASSY, ACCELERATOR PEDAL					
8008-8411	BJ60			78120-90A03-	1	455	514
8411-	BJ60,HJ60			78120-90A06-	1	515	
8008-8504	FJ60			78120-90A02-	1	455	554
8504-	FJ60			78120-90A07-	1	555	
	78110A	SPRING (FOR ACCELERATOR PEDAL ROD)					
8008-	BJ60,HJ60,FJ60			90506-12262-	1	455	
	78118	PAD, ACCELERATOR PEDAL					
8008-	BJ60,HJ60,FJ60			78111-95110-	1	455	
	78118B	STOPPER, ACCELERATOR PEDAL					
8411-8504	BJ60			78118-90K00-	1	515	554
8504-	BJ60,HJ60,FJ60				1	555	
	78130	BELLCRANK ASSY, ACCELERATOR					
8008-8411	BJ60			78160-90A01-	1	455	514
8411-	BJ60,HJ60			78160-90A02-	1	515	
8008-	FJ60			78170-90A00-	1	455	
	78180	WIRE ASSY, ACCELERATOR					
8008-8205	BJ60			78180-90A04-	1	455	

PROD.DATE	MODELS	DESCRIPTION	R/P	PART NUMBER	QTY	REV.REF.CODE FROM	REV.REF.CODE UP TO
	78180 WIRE ASSY, ACCELERATOR CONTINUED						
8205-8411	BJ60			78180-90A08-	1		514
8411-8510	BJ60			78180-90A15-	1	515	566
8510-	HJ60..ATM			78180-90A14-	1	567	
8510-	HJ60..MTM			78180-90A13-	1	567	
	78180A PIN, ACCELERATOR WIRE SET						
8008-8411	BJ60			90240-05071-	1	455	514
	78183 BRACKET, ACCELERATOR LINK ROD						
8008-	FJ60			78014-90A00-	1	455	
	78186 SUPPORT, ACCELERATOR CONTROL CABLE, NO.1						
8510-	HJ60..ATM			78186-90A01-	1	567	
	78191 BRACKET, ACCELERATOR WIRE SUPPORT						
8008-8510	BJ60			78183-90A00-	1	455	566
	78198 BOOT, ACCELERATOR CONNECTING ROD						
8008-	BJ60,HJ60,FJ60			78199-90352-	1	455	
	78310 CABLE ASSY, CHOKE						
8008-8210	FJ60			78310-90A01-	1	455	466
8210-	FJ60			78310-90A04-	1	467	
	78310F NUT, CHOKE						
8008-8210	FJ60			90170-11003-	1	455	466
8210-	FJ60			90179-14004-	1	467	
	78311 KNOB, CHOKE CONTROL CABLE						
8008-8210	FJ60			78303-90A00-	1	455	466
8210-	FJ60			78303-90A02-	1	467	
	78410 CABLE ASSY, THROTTLE CONTROL						
8008-8411	BJ60,FJ60			78410-90A03-	1	455	514
8411-	BJ60,HJ60			78410-90A02-	1	515	
8411-	FJ60			78410-90A03-	1	515	

GENUINE TOYOTA PARTS

PROD.DATE	MODELS	DESCRIPTION	R/P	PART NUMBER	QTY	REV.REF.CODE FROM	REV.REF.CODE UP TO
	78429 BRACKET, THROTTLE ROD						
8008-	BJ60,HJ60,FJ60			78471-90A00-	1	455	
	78449 GUIDE, THROTTLE CABLE						
8008-8507	BJ60,FJ60			78449-90300-	1	455	

(8008–)

ILLUST•NO• 1OF2

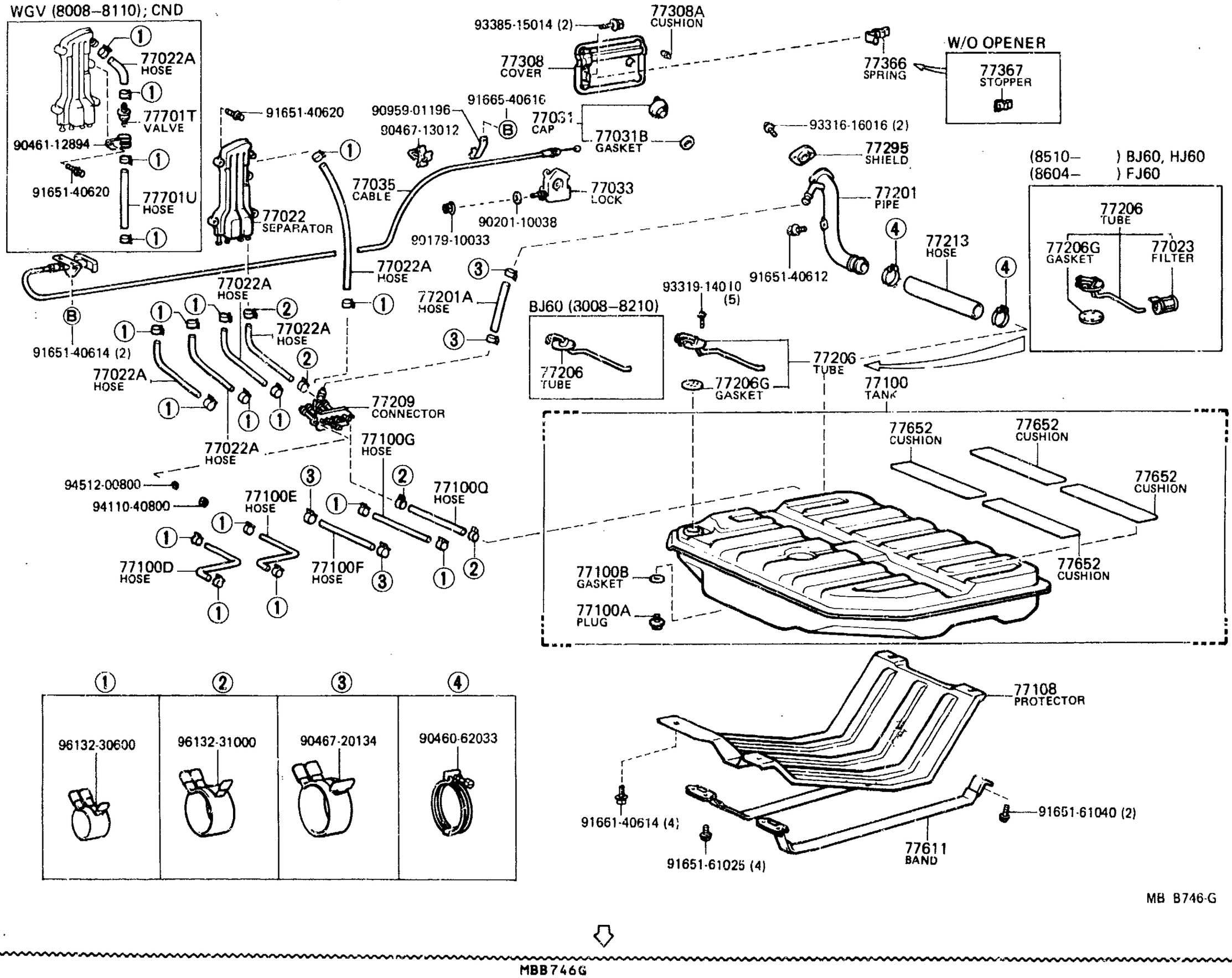

(8008-8411)BJ60

ILLUST•NO• 20F2

W/O Sedimenter

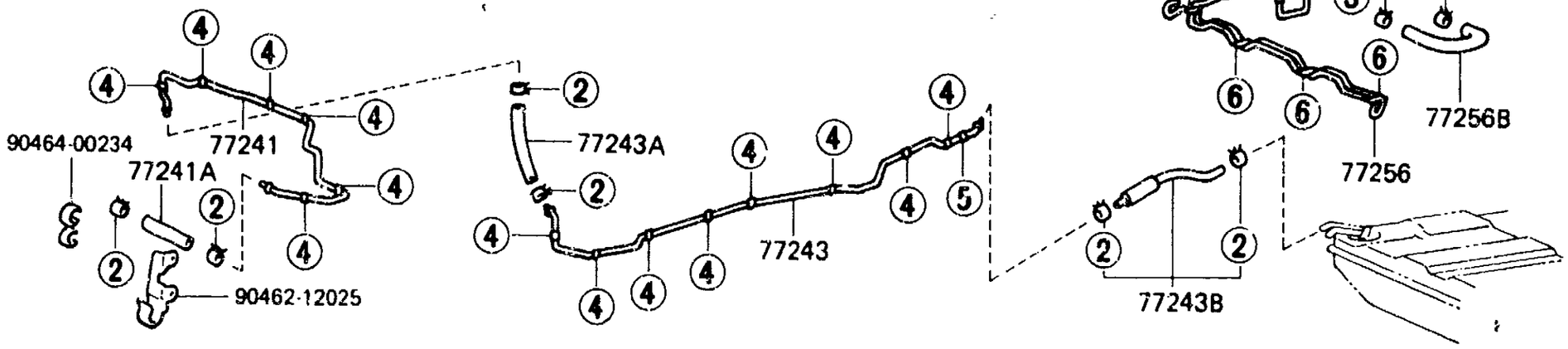

W/ Sedimenter

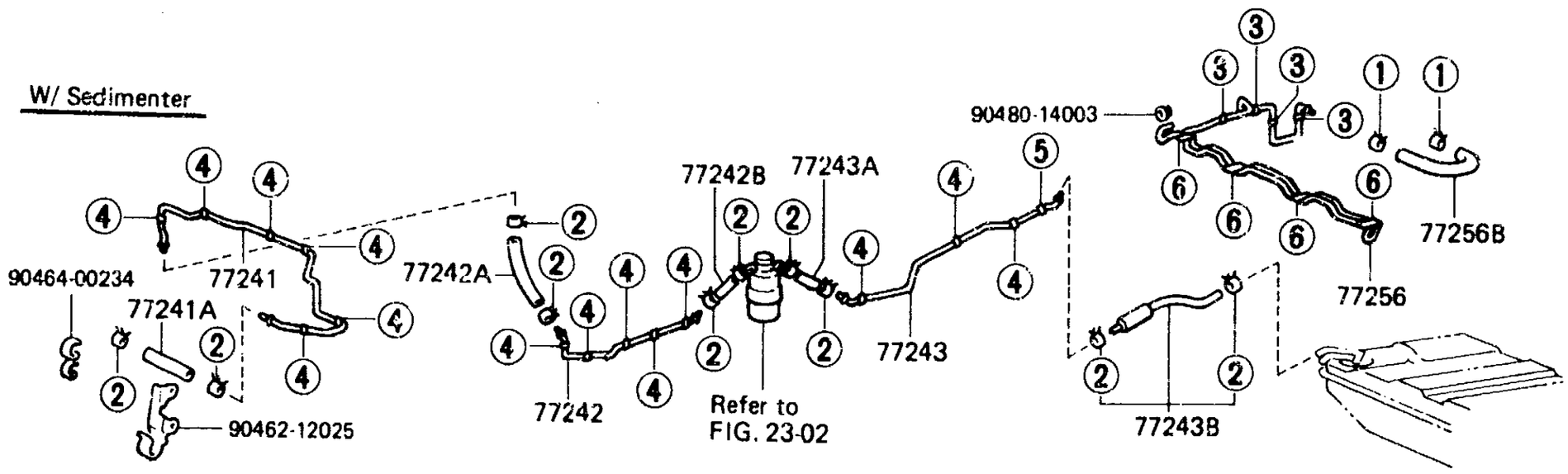

①	②	③	④	⑤	⑥
96132-30600	96132-30800	90461-06156	90461-08422	77777-60011	90461-08324
		Ⓑ 91651-40814	Ⓑ 91611-40820	Ⓑ 91611-40820	90480-01107 Ⓑ 91651-40814

MB B747-F

FIG•77-51 FUEL TANK & TUBE

3-H9

(8411-)BJ60•HJ60

ILLUST•NO• 20F2

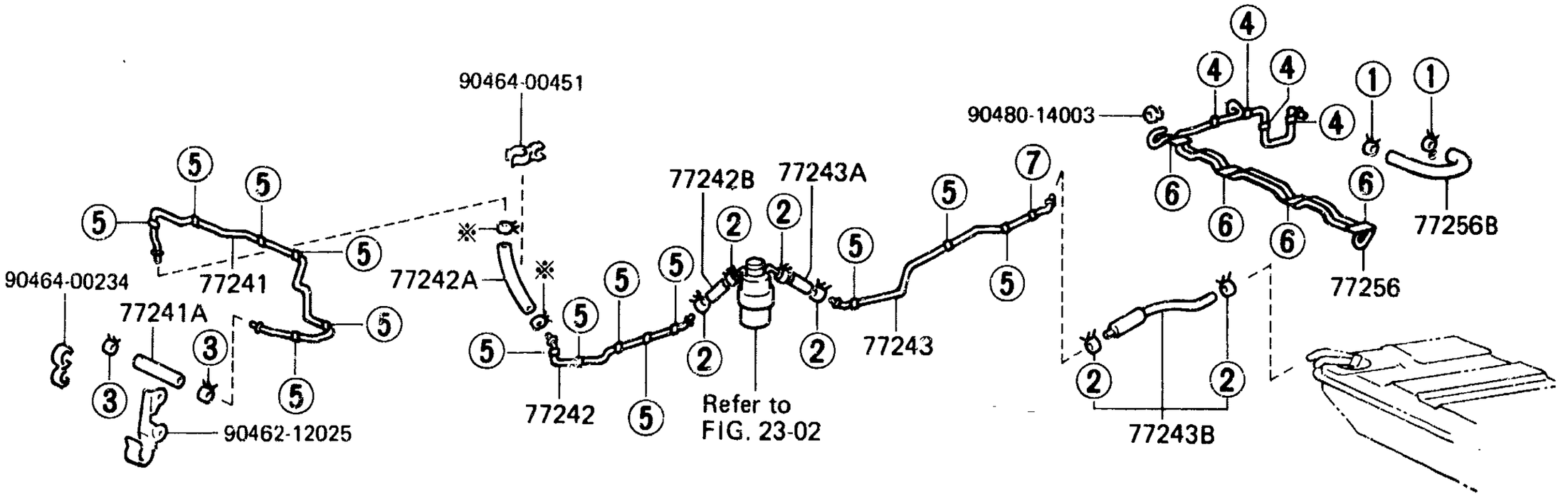

※(8411–8510) ②
※(8510–) ③

①	②	③	④	⑤	⑥	⑦
96132-30600	96132-30800	90467-13007	90461-06156 Ⓑ 91651-40814	90461-10651 Ⓑ 91616-40820	90461-08324 90480-01107 Ⓑ 91651-40814	90461-10671 Ⓑ 91616-40820

MB H774-B

FIG.77-51 FUEL TANK & TUBE

3-I9

MR4-11-0476

(8008-8110)FJ60..WGV..CND

ILLUST.NO. 2OF2

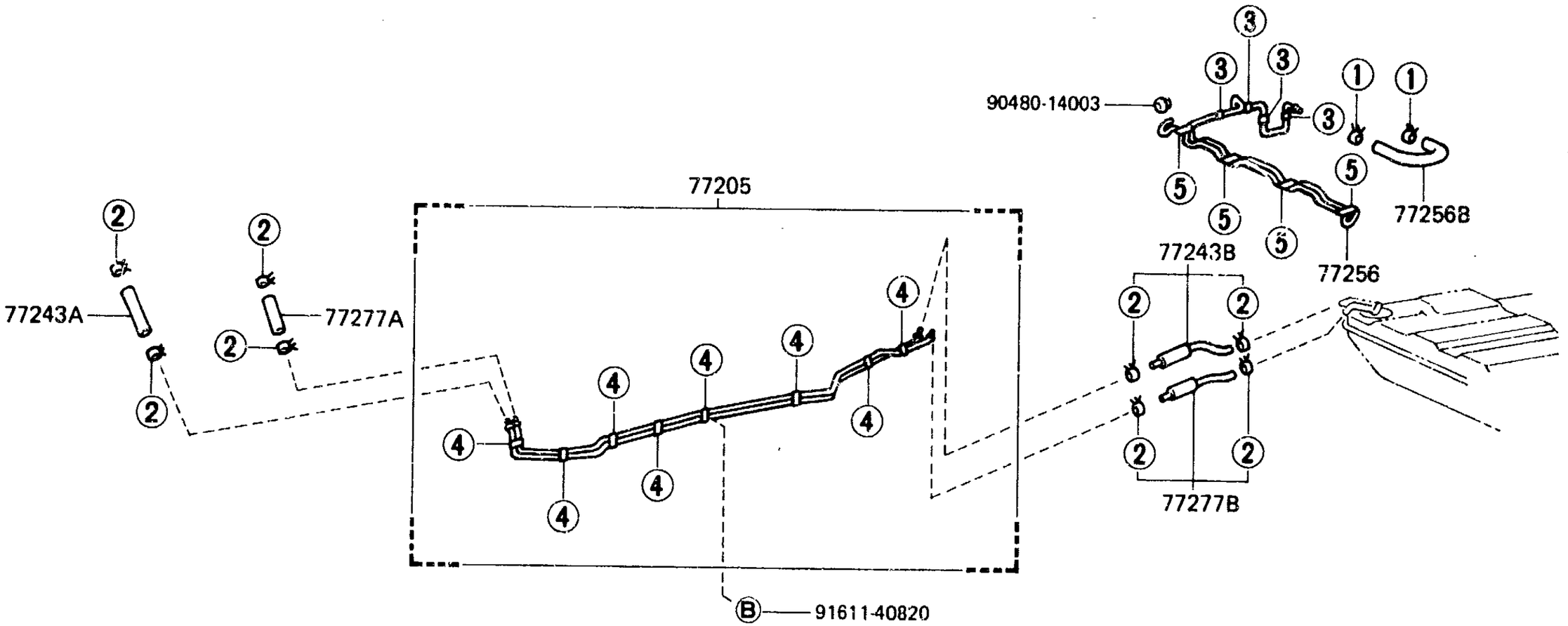

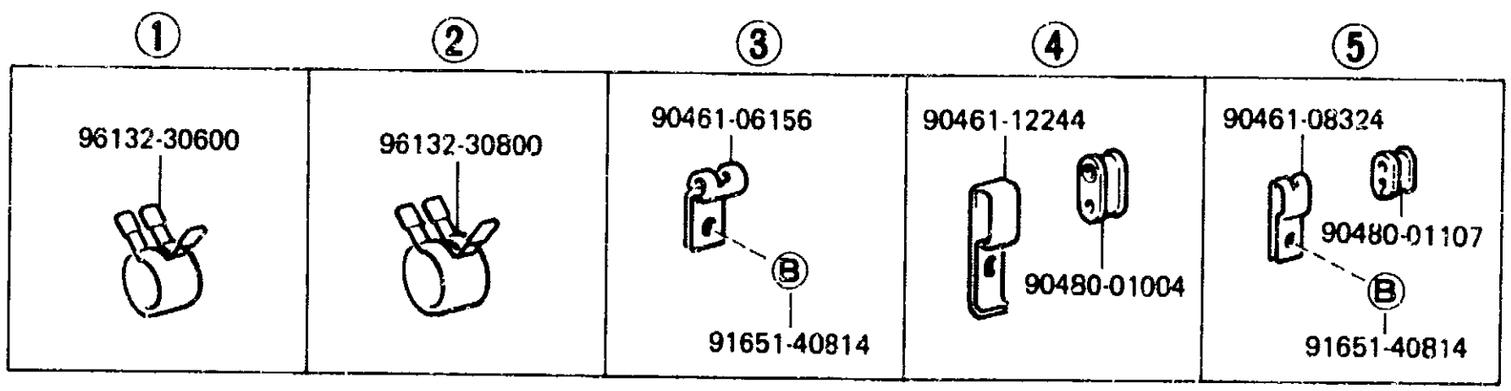

MB H775

MBH775

FIG.77-51 FUEL TANK & TUBE

3-J9

MR4-11-0477

(8008-8504)FJ60..WGG..USA

ILLUST.NO. 2OF2

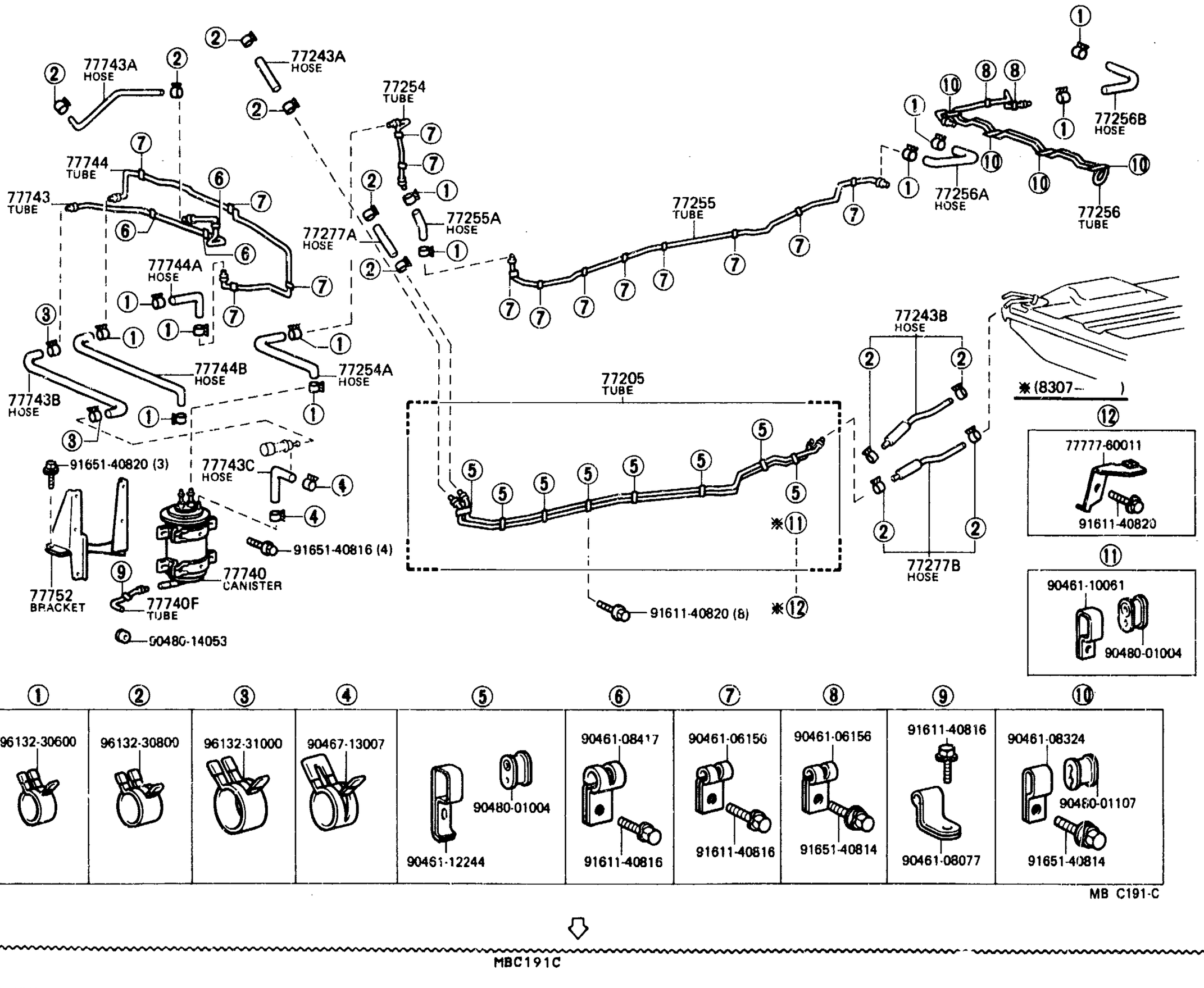

MB C191-C

MBC191C

FIG•77-51 FUEL TANK & TUBE

3-K9

MR4-11-0478

(8504-8510)FJ60

ILLUST•NO• 2OF2

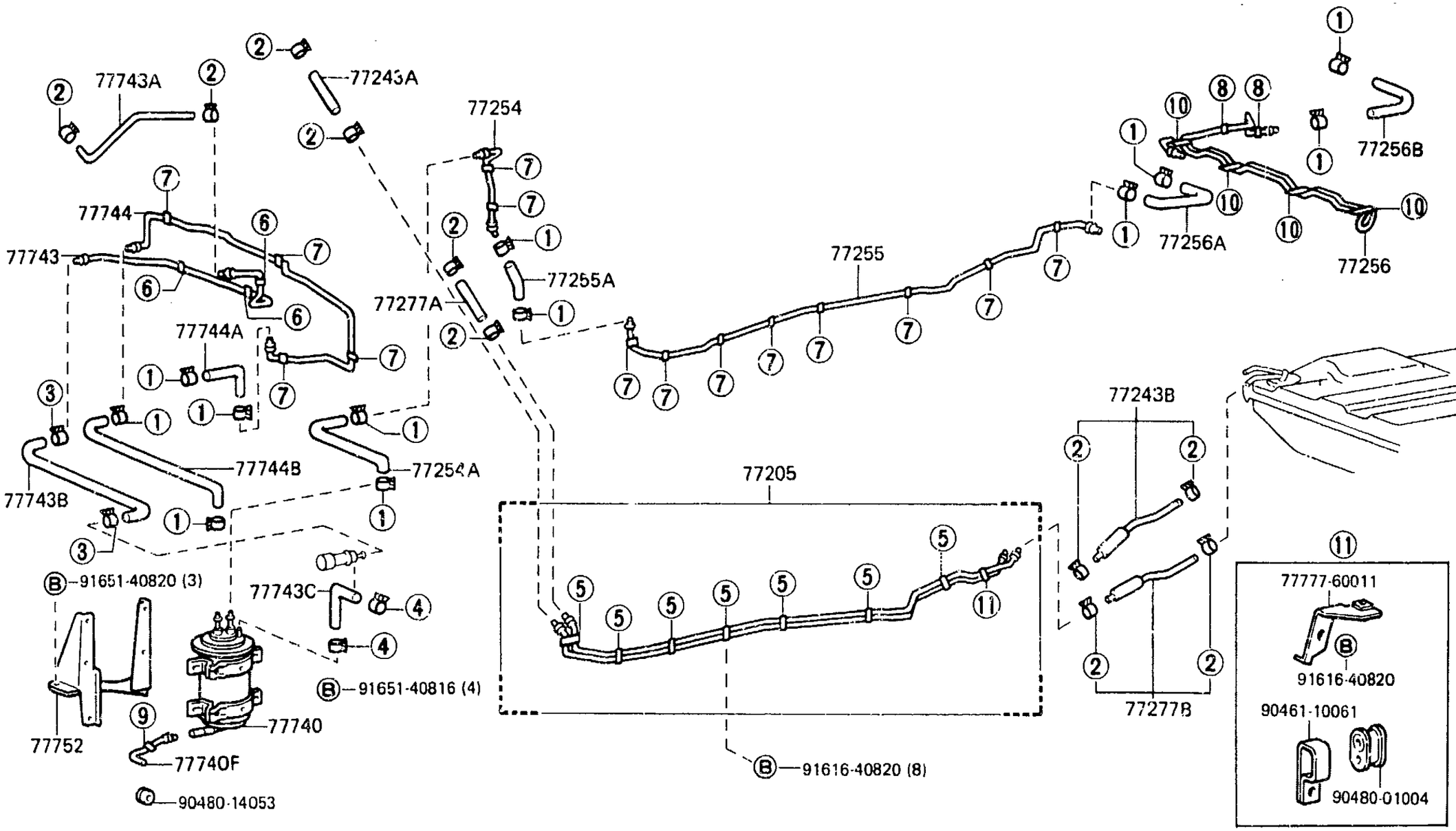

①	②	③	④	⑤	⑥	⑦	⑧	⑨	⑩
96132-30600	96132-30800	96132-31000	90467-13007	90480-01004 90461-12244	90461-08417 Ⓑ 91611-40816	90461-06156 Ⓑ 91611-40816	90461-06156 Ⓑ 91651-40814	91611-40816 Ⓑ 90451-08077	90461-08324 90480-01107 Ⓑ 91651-40814

MB J098-A

MBJ098A

GENUINE TOYOTA PARTS

	PROD.DATE	MODELS	DESCRIPTION	R/P	PART NUMBER	QTY	REV.REF.CODE FROM	REV.REF.CODE UP TO
	FIG.	77-51 FUEL TANK & TUBE						
		77022 SEPARATOR SUB-ASSY, FUEL EVAPORATIVE						
	8008-	BJ60,HJ60,FJ60			77193-60030-	1	455	
		77022A HOSE, FUEL (FOR FUEL EVAPORATIVE SEPARATOR)						
C	8008-8105	BJ60,FJ60	L=220		# 95331-10020- (95332-10020-)	1	455	
	8008-	BJ60,HJ60,FJ60	*H,L=220		95332-06030-	3	455	
	8105-	BJ60,HJ60,FJ60	L=220		95332-10022-	1		
	8008-	BJ60,HJ60,FJ60..CND	*H,L=70		95332-06010-	1	455	
	8008-	FJ60..WGG	*H,L=460		95332-06060-	1	455	
		77023 FILTER SUB-ASSY, FUEL SUCTION TUBE						
C	8510-	BJ60,HJ60			77023-22040-	1	567	
	8604-	FJ60				1	573	
		77031 CAP ASSY, FUEL TANK						
	8008-8110	BJ60,FJ60	W/O KEY		# 77310-12090- (77310-12100-)	1	455	458
	8110-8210	BJ60,FJ60	W/O KEY		77310-12100-	1	459	466
	8210-	BJ60,HJ60			77310-35061-	1	467	
	8210-	FJ60	W/O KEY		77310-12100-	1	467	
		77031B GASKET (FOR FUEL TANK CAP)						
	8008-	BJ60,HJ60,FJ60			77316-12050-	1	455	
		77033 LOCK SUB-ASSY, FUEL TANK CAP						
	8411-	BJ60,HJ60			77037-90K00-	1	515	
		77035 CABLE SUB-ASSY, FUEL LID LOCK CONTROL						
	8411-	BJ60,HJ60			77030-90A01-	1	515	
		77100 TANK ASSY, FUEL						
C	8008-8604	BJ60,FJ60			77001-60110-	1	455	572
C	8604-	FJ60			77001-60200-	1	573	
	8510-	HJ60				1	567	

* H, L = Cut hose to length as specified in remarks

GENUINE TOYOTA PARTS

PROD.DATE	MODELS	DESCRIPTION	P/P	PART NUMBER	QTY	REV.REF.CODE FROM	REV.REF.CODE UP TO
	77100A PLUG (FOR FUEL TANK)						
8008-	BJ60,HJ60,FJ60			90105-12018-	1	455	
	77100B GASKET (FOR FUEL TANK)						
8008-	BJ60,HJ60,FJ60			90430-12245-	1	455	
	77100D HOSE, FUEL, NO.1 (FOR FUEL TANK)						
8008-	BJ60,HJ60,FJ60			77249-60040-	1	455	
	77100E HOSE, FUEL, NO.2 (FOR FUEL TANK)						
8008-	BJ60,HJ60,FJ60			77249-60050-	1	455	
	77100F HOSE, FUEL, NO.3 (FOR FUEL TANK)						
8008-	BJ60,HJ60,FJ60			90445-22904-	1	455	
	77100G HOSE, FUEL, NO.4 (FOR FUEL TANK)						
8008-	BJ60,HJ60,FJ60	*H,L=340		95332-06040-	1	455	
	77100Q HOSE, FUEL, NO.5 (FOR FUEL TANK)						
8008-8105	BJ60,FJ60	L=360		# 95331-10036- (95332-10036-)	1	455	
8105-	BJ60,HJ60,FJ60	L=360		95332-10036-	1		
	77108 PROTECTOR SUB-ASSY, FUEL TANK						
8008-	BJ60,HJ60,FJ60			58279-90A00-	1	455	
	77201 PIPE SUB-ASSY, FUEL TANK INLET						
8008-8110	BJ60,FJ60..WGV			77201-60130-	1	455	458
8110-	BJ60,HJ60				1	459	
8008-	FJ60..WGG			77201-60150-	1	455	
	77201A HOSE, FUEL, NO.1 (FOR FUEL TANK INLET PIPE)						
8008-	BJ60,HJ60,FJ60			90445-22015-	1	455	
	77205 TUBE SUB-ASSY, FUEL MAIN						
8008-8307	FJ60			77205-60060-	1	455	
8307-8504	FJ60			77205-60061-	1		554
8504-	FJ60			77205-60270-	1	555	

GENUINE TOYOTA PARTS

PROD.DATE	MODELS	DESCRIPTION	R/P	PART NUMBER	QTY	REV.REF.CODE FROM	REV.REF.CODE UP TO
	71825B MOULDING,	REAR SEAT CUSHION, RH					
8411-8504	BJ60	SEPIA BROWN		71825-90A00-16	1	515	554
8008-8411	BJ60,FJ60	DARK BROWN		71825-90A00-06	1	455	514
8210-	BJ60,HJ60,FJ60	SHADOW GRAY		71825-90A00-03	1	467	
8504-	BJ60,HJ60,FJ60	SEPIA BROWN		71825-90A00-16	1	555	
8411-8504	FJ60	DARK BROWN		71825-90A00-06	1	515	554
	71826B MOULDING,	REAR SEAT CUSHION, LH					
8411-8504	BJ60	SEPIA BROWN		71826-90A00-16	1	515	554
8008-8411	BJ60,FJ60	DARK BROWN		71826-90A00-06	1	455	514
8210-	BJ60,HJ60,FJ60	SHADOW GRAY		71826-90A00-03	1	467	
8504-	BJ60,HJ60,FJ60	SEPIA BROWN		71826-90A00-16	1	555	
8411-8504	FJ60	DARK BROWN		71826-90A00-06	1	515	554
	71827B MOULDING,	REAR SEAT CUSHION, FRONT					
8411-8504	BJ60	SEPIA BROWN		71827-90A00-16	1	515	554
8008-8411	BJ60,FJ60	DARK BROWN		71827-90A00-06	1	455	514
8210-	BJ60,HJ60,FJ60	SHADOW GRAY		71827-90A00-03	1	467	
8504-	BJ60,HJ60,FJ60	SEPIA BROWN		71827-90A00-16	1	555	
8411-8504	FJ60	DARK BROWN		71827-90A00-06	1	515	554
	71828B MOULDING,	REAR SEAT CUSHION, REAR RH					
8411-8504	BJ60	SEPIA BROWN		71828-90A00-16	1	515	554
8008-8411	BJ60,FJ60	DARK BROWN		71828-90A00-06	1	455	514
8210-	BJ60,HJ60,FJ60	SHADOW GRAY		71828-90A00-03	1	467	
8504-	BJ60,HJ60,FJ60	SEPIA BROWN		71828-90A00-16	1	555	
8411-8504	FJ60	DARK BROWN		71828-90A00-06	1	515	554
	71829B MOULDING,	REAR SEAT CUSHION, REAR LH					
8411-8504	BJ60	SEPIA BROWN		71829-90A00-16	1	515	554
8008-8411	BJ60,FJ60	DARK BROWN		71829-90A00-06	1	455	514
8210-	BJ60,HJ60,FJ60	SHADOW GRAY		71829-90A00-03	1	467	
8504-	BJ60,HJ60,FJ60	SEPIA BROWN		71829-90A00-16	1	555	
8411-8504	FJ60	DARK BROWN		71829-90A00-06	1	515	554
	71835C MOULDING,	REAR SEAT BACK, RH					
8411-8504	BJ60	SEPIA BROWN		71835-90A00-16	1	515	554
8008-8411	BJ60,FJ60	DARK BROWN		71835-90A00-06	1	455	514
8210-	BJ60,HJ60,FJ60	SHADOW GRAY		71835-90A00-03	1	467	
8504-	BJ60,HJ60,FJ60	SEPIA BROWN		71835-90A00-16	1	555	
8411-8504	FJ60	DARK BROWN		71835-90A00-06	1	515	554
	71836C MOULDING,	REAR SEAT BACK, LH					
8411-8504	BJ60	SEPIA BROWN		71836-90A00-16	1	515	554
8008-8411	BJ60,FJ60	DARK BROWN		71836-90A00-06	1	455	514
8210-	BJ60,HJ60,FJ60	SHADOW GRAY		71836-90A00-03	1	467	
8504-	BJ60,HJ60,FJ60	SEPIA BROWN		71836-90A00-16	1	555	
8411-8504	FJ60	DARK BROWN		71836-90A00-06	1	515	554
	71837C MOULDING,	REAR SEAT BACK, UPPER					
8411-8504	BJ60	SEPIA BROWN		71837-90A00-16	1	515	554
8008-8411	BJ60,FJ60	DARK BROWN		71837-90A00-06	1	455	514
8210-8604	BJ60,FJ60	SHADOW GRAY	C	71837-90A00-03	1	467	572
8504-8604	BJ60,FJ60	SEPIA BROWN	C	71837-90A00-16	1	555	572
8411-8504	FJ60	DARK BROWN		71837-90A00-06	1	515	554

PROD.DATE	MODELS	DESCRIPTION	R/P	PART NUMBER	QTY	REV.REF.CODE FROM	REV.REF.CODE UP TO
FIG.	75-51 EMBLEM & NAME PLATE						
	75311 EMBLEM, RADIATOR GRILLE (OR FRONT PANEL)						
C 8008-8510	BJ60,FJ60	TOYOTA		# 75316-69015- (75316-90A00-)	1	455	
8510-	HJ60,FJ60	TOYOTA		75316-90A00-	1		
	75321 PLATE, RADIATOR GRILLE OR FRONT PANEL NAME						
8008-8211	BJ60	DIESEL		# 75325-90301- (75315-90A00-)	1	455	
8211-	BJ60,HJ60	DIESEL		75315-90A00-	1		
	75326 PLATE, RADIATOR GRILLE PLATE						
8008-	BJ60,HJ60			75317-90A00-	1	455	
	75353 ORNAMENT, FRONT FENDER						
8008-	FJ60..WGG	RH		75330-90A00-	1	455	
8008-	FJ60..WGG	LH		75340-90A00-	1	455	
	75365 EMBLEM, FRONT FENDER						
8008-	BJ60,HJ60	G		75351-90A00-	2	455	
	75381 PLATE, QUARTER PANEL OR SIDE PANEL NAME (MODEL MARK)						
8008-8410	BJ60,FJ60	TOYOTA LAND CRUISER	#	75370-90A00- (75370-90A02-)	2	455	
8410-	BJ60,HJ60,FJ60	TOYOTA LAND CRUISER		75370-90A02-	2		
	75465 PLATE, REAR NAME, NO.5 (MECHANISM)						
8008-8410	BJ60,FJ60	4WD	#	75430-90A00- (75430-90A02-)	1	455	
8410-	BJ60,HJ60,FJ60	4WD		75430-90A02-	1		

PROD.DATE	MODELS	DESCRIPTION	R/P	PART NUMBER	QTY	REV.REF.CODE FROM	REV.REF.CODE UP TO

GENUINE TOYOTA PARTS

	PROD.DATE	MODELS	DESCRIPTION	R/P	PART NUMBER	QTY	REV.REF.CODE FROM	REV.REF.CODE UP TO
		77255 TUBE, FUEL EMISSION, NO.2 CONTINUED						
C	8008-8604	FJ60..WGG			77261-60030-	1	455	572
		77255A HOSE, FUEL, NO.1 (FOR EMISSION TUBE, NO.2)						
	8008-	FJ60..WGG	L=200		95332-06020-	1	455	
		77256 TUBE, FUEL EMISSION, NO.3						
	8008-8110	BJ60,FJ60,[illegible]			77244-60140-	1	455	458
	8110-	BJ60,HJ60				1	459	
	8008-	FJ60..WGG			77244-60110-	1	455	
		77256A HOSE, FUEL, NO.1 (FOR EMISSION TUBE, NO.3)						
	8008-	FJ60..WGG	*H,L=240		95332-06030-	1	455	
		77256B HOSE, FUEL, NO.2 (FOR EMISSION TUBE, NO.3)						
	8008-	BJ60,FJ60..WGV	*H,L=260		95332-06030-	1	455	
	8110-	BJ60,HJ60	*H,L=260			1	459	
	8008-	FJ60..WGG	*H,L=240			1	455	
		77277A HOSE, FUEL, NO.1 (FOR RETURN TUBE, NO.1)						
	8008-	FJ60			77250-61030-	1	455	
		77277B HOSE, FUEL, NO.2 (FOR RETURN TUBE, NO.1)						
	8008-	FJ60			77260-60060-	1	455	
		77295 SHIELD, FUEL FILLER PIPE						
	8008-	BJ60,HJ60,FJ60			77293-60030-	1	455	
		77308 COVER SUB-ASSY, FUEL INLET BOX						
	8411-8504	BJ60			77305-90A01-	1	515	554
	8008-8411	BJ60,FJ60			77305-90A00-	1	455	514
	8504-	BJ60,HJ60,FJ60			77305-90A01-	1	555	
	8411-8504	FJ60			77305-90A00-	1	515	554
		77308A CUSHION (FOR FUEL INLET BOX COVER)						
	8008-	BJ60,HJ60,FJ60			90541-08003-	2	455	

	PROD.DATE	MODELS	DESCRIPTION	R/P	PART NUMBER	QTY	REV.REF.CODE FROM	REV.REF.CODE UP TO
		77366 SPRING, FUEL FILLER OPENING LID HINGE						
	8411-	BJ60,HJ60	W/FUEL LID OPENER		77366-12010-	1	515	
		77367 STOPPER, FUEL FILLER OPENING LID						
	8411-	BJ60,HJ60			77358-12020-	1	515	
C	8604-	FJ60				1	573	
		77611 BAND, FUEL TANK						
	8008-	BJ60,HJ60,FJ60	RH		77601-60060-	1	455	
	8008-	BJ60,HJ60,FJ60	LH		77602-60040-	1	455	
		77652 CUSHION, FUEL TANK, NO.1						
	8008-	BJ60,HJ60,FJ60			77653-60010-	4	455	
		77701T VALVE, CHECK						
C	8008-8608	BJ60,HJ60,FJ60..CND			90917-10020-	1	455	600
C	8608-	[illegible]60				1	601	
		77701U HOSE, FUEL (FOR CHECK VALVE)						
	8008-	BJ60,HJ60,FJ60..CND	*H,L=360		95332-06040-	1	455	
		77740 CANISTER ASSY, CHARCOAL						
	8008-	FJ60..WGG			77740-60060-	1	455	
		77740F TUBE, FUEL, NO.1 (FOR CHARCOAL CANISTER)						
	8008-	FJ60..WGG			77264-60030-	1	455	
		77743 TUBE, OUTER VENT VALVE TO CARBURETOR						
	8008-	FJ60..WGG			77263-60040-	1	455	
		77743A HOSE, FUEL, NO.1 (FOR OUTER VENT VALVE TO CARBURETOR)						
	8008-	FJ60..WGG			77249-60030-	1	455	
		77743B HOSE, FUEL, NO.2 (FOR OUTER VENT VALVE TO CARBURETOR)						
C	8008-	FJ60..WGG			95332-10020-	1	455	

* H, L = Cut hose to length as specified in remarks

GENUINE TOYOTA PARTS

	PROD.DATE	MODELS	DESCRIPTION	R/P	PART NUMBER	QTY	REV.REF.CODE FROM	REV.REF.CODE UP TO
		+---------+						
		| 71837C | MOULDING, REAR SEAT BACK, UPPER CONTINUED						
C	8604-	FJ60	SHADOW GRAY		71837-90A01-03	1	573	
C	8604-	FJ60	SEPIA BROWN		71837-90A01-06	1	573	
	8510-	HJ60	SHADOW GRAY		71837-90A01-03	1	567	
	8510-	HJ60	SEPIA BROWN		71837-90A01-06	1	567	
		+---------+						
		| 71887B | MAT, REAR SEAT CUSHION						
		+---------+						
	8411-8504	BJ60	SHADOW GRAY		71887-90A00-03	1	515	554
	8411-8504	BJ60	SEPIA BROWN		71887-90A00-16	1	515	554
	8008-8411	BJ60,FJ60	DARK BROWN		71887-90A00-06	1	455	514
	8210-8411	BJ60,FJ60	BLACK		71887-90A00-01	1	467	514
	8504-	BJ60,HJ60,FJ60	SHADOW GRAY		71887-90A00-03	1	555	
	8504-	BJ60,HJ60,FJ60	SEPIA BROWN		71887-90A00-16	1	555	
	8411-8504	FJ60	BLACK		71887-90A00-01	1	515	554
	8411-8504	FJ60	DARK BROWN		71887-90A00-06	1	515	554
		+---------+						
		| 71950 | HEADREST ASSY, FRONT SEAT						
		+---------+						
	8411-8504	BJ60	SEPIA BROWN		71910-90A01-16	2	515	554
	8008-8411	BJ60,FJ60	DARK BROWN		71910-90A01-06	2	455	514
	8210-	BJ60,HJ60,FJ60	SHADOW GRAY		71910-90A01-03	2	467	
	8504-	BJ60,HJ60,FJ60	SEPIA BROWN		71910-90A01-16	2	555	
	8411-8504	FJ60	DARK BROWN		71910-90A01-06	2	515	554
		+---------+						
		| 71956A | SUPPORT, FRONT SEAT HEADREST						
		+---------+						
	8411-8504	BJ60	W/O LOCK,SEPIA BROWN		71956-30020-56	2	515	554
	8411-8504	BJ60	W/LOCK,SEPIA BROWN		71990-30020-56	2	515	554
	8008-8210	BJ60,FJ60	W/LOCK		71930-90A00-	2	455	466

	PROD.DATE	MODELS	DESCRIPTION	R/P	PART NUMBER	QTY	REV.REF.CODE FROM	REV.REF.CODE UP TO
		+---------+						
		| 71956A | SUPPORT, FRONT SEAT HEADREST CONTINUED						
	8008-8210	BJ60,FJ60	W/O LOCK		71931-90A00-	2	455	466
	8210-8411	BJ60,FJ60	W/O LOCK,DARK BROWN		71956-30020-16	2	467	514
	8210-8411	BJ60,FJ60	W/LOCK,DARK BROWN		71990-30020-16	2	467	514
	8210-	BJ60,HJ60,FJ60	W/O LOCK,SHADOW GRAY		71956-30020-13	2	467	
	8210-	BJ60,HJ60,FJ60	W/LOCK,SHADOW GRAY		71990-30020-13	2	467	
	8504-	BJ60,HJ60,FJ60	W/O LOCK,SEPIA BROWN		71956-30020-56	2	555	
	8504-	BJ60,HJ60,FJ60	W/LOCK,SEPIA BROWN		71990-30020-56	2	555	
	8411-8504	FJ60	W/O LOCK,DARK BROWN		71956-30020-16	2	515	554
	8411-8504	FJ60	W/LOCK,DARK BROWN		71990-30020-16	2	515	554
		+---------+						
		| 72110B | TRACK ASSY, SEAT, OUTER RH (FOR BENCH SEAT)						
		+---------+						
	8008-8110	BJ60,FJ60			72110-90A00-	1	455	458
		+---------+						
		| 72110S | TRACK ASSY, RH SEAT, OUTER (FOR SEPARATE SEAT)						
		+---------+						
C	8008-8604	BJ60,FJ60			72110-90A00-	1	455	572
C	8604-	FJ60			72110-90A04-	1	573	
	8510-	HJ60				1	567	
		+---------+						
		| 72120B | TRACK ASSY, SEAT, OUTER LH (FOR BENCH SEAT)						
		+---------+						
	8008-8110	BJ60,FJ60			72120-90A00-	1	455	458
		+---------+						
		| 72120S | TRACK ASSY, LH SEAT, OUTER (FOR SEPARATE SEAT)						
		+---------+						
C	8008-8604	BJ60,FJ60			72120-90A00-	1	455	572
C	8604-	FJ60			72120-90A04-	1	573	
	8510-	HJ60				1	567	
		+---------+						
		| 72130B | TRACK ASSY, RH SEAT, INNER (FOR BENCH SEAT)						
		+---------+						
	8008-8110	BJ60,FJ60			72130-90A01-	1	455	458

GENUINE TOYOTA PARTS

(8008-)

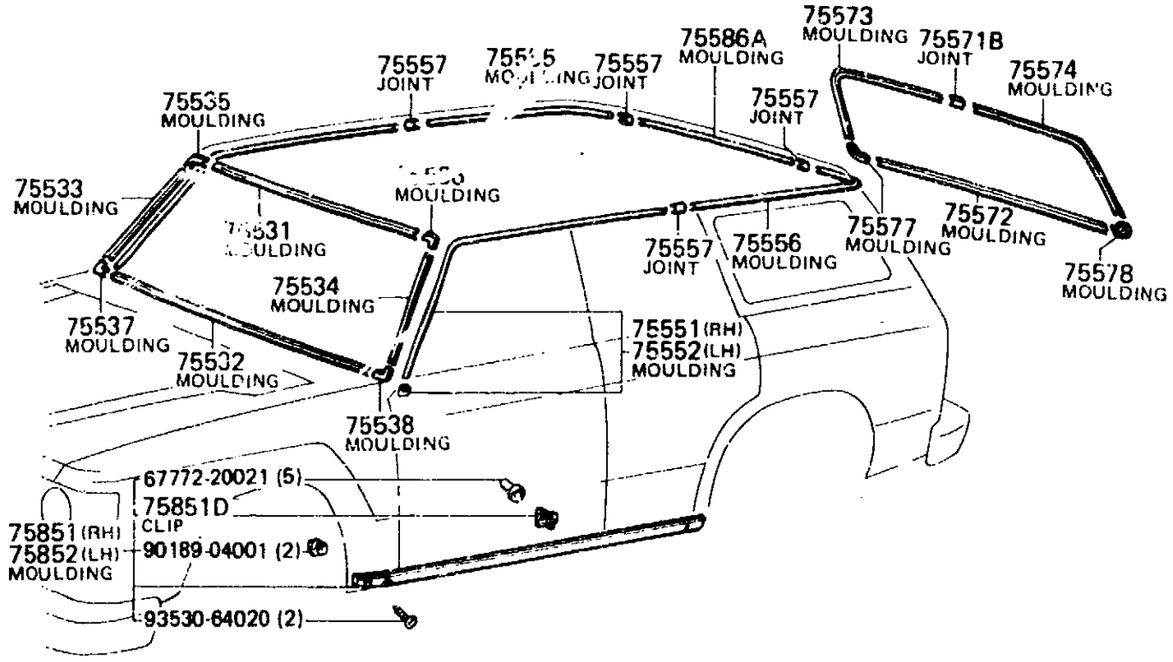

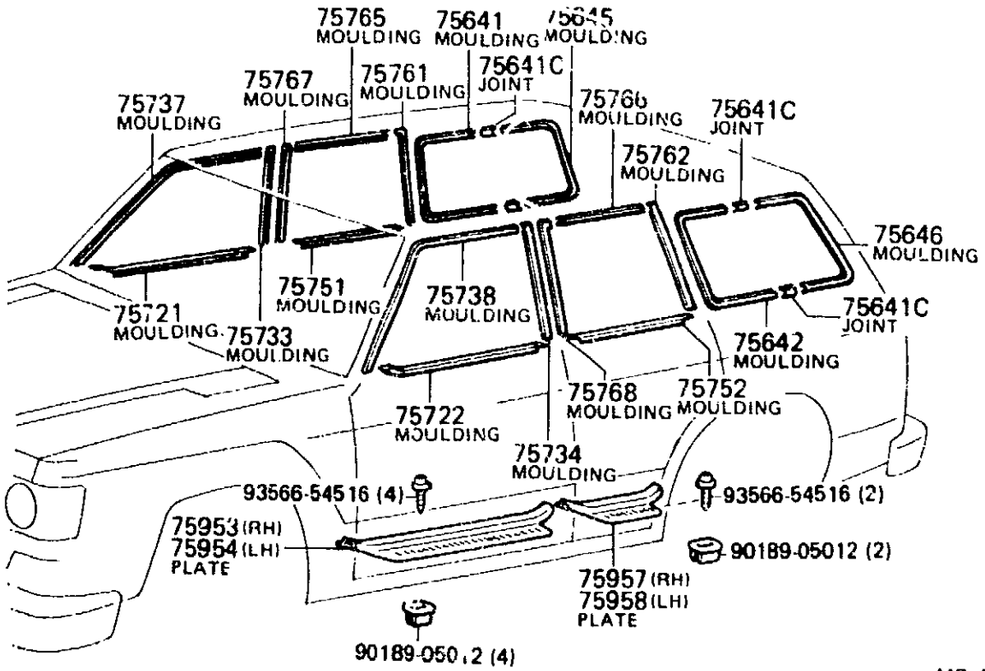

M9 9717-E

PROD.DATE	MODELS	DESCRIPTION	R/P	PART NUMBER	QTY	REV.REF.CODE FROM	REV.REF.CODE UP TO
FIG.	75-52 MOULDING						
	75531 MOULDING,	WINDSHIELD, UPPER					
8008-	BJ60,HJ60,FJ60			75531-90A00-	1	455	
	75532 MOULDING,	WINDSHIELD, LOWER					
8008-	BJ60,HJ60,FJ60			75535-90A00-	1	455	
	75533 MOULDING,	WINDSHIELD SIDE, RH					
8008-	BJ60,HJ60,FJ60			75533-90A00-	1	455	
	75534 MOULDING,	WINDSHIELD SIDE, LH					
8008-	BJ60,HJ60,FJ60			75534-90A00-	1	455	
	75535 MOULDING,	WINDSHIELD CORNER, UPPER RH					
8008-	BJ60,HJ60,FJ60			75541-90A00-	1	455	
	75536 MOULDING,	WINDSHIELD CORNER, UPPER LH					
8008-	BJ60,HJ60,FJ60			75541-90A00-	1	455	
	75537 MOULDING,	WINDSHIELD CORNER, LOWER RH					
8008-	BJ60,HJ60,FJ60			75543-90A00-	1	455	
	75538 MOULDING,	WINDSHIELD CORNER, LOWER LH					
8008-	BJ60,HJ60,FJ60			75543-90A00-	1	455	
	75551 MOULDING,	ROOF DRIP SIDE FINISH, FRONT RH					
8008-	BJ60,HJ60,FJ60			75505-90A00-	1	455	
	75552 MOULDING,	ROOF DRIP SIDE FINISH, FRONT LH					
8008-	BJ60,HJ60,FJ60			75506-90A00-	1	455	
	75555 MOULDING,	ROOF DRIP SIDE FINISH, REAR RH					
8008-	BJ60,HJ60,FJ60			75553-90A00-	1	455	
	75556 MOULDING,	ROOF DRIP SIDE FINISH, REAR LH					
8008-	BJ60,HJ60,FJ60			75554-90A00-	1	455	

	PROD.DATE	MODELS	DESCRIPTION	R/P	PART NUMBER	QTY	REV.REF.CODE FROM	REV.REF.CODE UP TO
		72130S TRACK ASSY, RH SEAT, INNER (FOR SEPARATE SEAT)						
C	8008-8604	BJ60,FJ60			72130-90A00-	1	455	572
C	8604-	FJ60			72130-90A03-	1	573	
	8510-	HJ60				1	567	
		72140B TRACK ASSY, LH SEAT, INNER (FOR BENCH SEAT)						
	8008-8110	BJ60,FJ60			72130-90A00-	1	455	458
		72140S TRACK ASSY, LH SEAT, INNER (FOR SEPARATE SEAT)						
C	8008-8604	BJ60,FJ60			72130-90A00-	1	455	572
C	8604-	FJ60			72140-90A00-	1	573	
	8510-	HJ60				1	567	
		72145A BRACKET, FRONT INNER SEAT TRACK, LOWER FRONT R						
C	8604-	FJ60			72145-90A00-H	1	573	
	8510-	HJ60				1	567	
		72146A BRACKET, FRONT INNER SEAT TRACK, LOWER FRONT L						
C	8604-	FJ60			72146-90A00-H	1	573	
	8510-	HJ60				1	567	
		72510 ADJUSTER ASSY, RECLINING SEAT BACK, RH						
	8008-8110	BJ60,FJ60	BENCH SEAT		72510-90A01-	1	455	458
C	8008-8608	BJ60,HJ60,FJ60	SEPARATE SEAT		72510-90A00-	1	455	600
C	8608-	HJ60,FJ60	SEPARATE SEAT		72510-90A03-	1	601	
		72520 ADJUSTER ASSY, RECLINING SEAT BACK, LH						
C	8008-8608	BJ60,HJ60,FJ60			72520-90A00-	1	455	600
C	8608-	HJ60,FJ60			72520-90A02-	1	601	
		72524 HANDLE, RECLINING ADJUSTER RELEASE						
	8411-8504	BJ60	RH,BROWN		72525-14010-56	1	515	554
	8411-8504	BJ60	LH,BROWN		72526-14010-56	1	515	554
	8008-8210	BJ60,FJ60	RH		72525-90A00-	1	455	466
	8008-8210	BJ60,FJ60	LH		72526-90A00-	1	455	466

GENUINE TOYOTA PARTS

	PROD.DATE	MODELS	DESCRIPTION	R/P	PART NUMBER	QTY	REV.REF.CODE FROM	REV.REF.CODE UP TO
		72524 HANDLE, RECLINING ADJUSTER RELEASE CONTINUED						
	8210-8411	BJ60,FJ60	RH,DARK BROWN		72525-14010-16	1	467	514
	8210-8411	BJ60,FJ60	LH,DARK BROWN		72526-14010-16	1	467	514
	8210-	BJ60,HJ60,FJ60	RH,SHADOW GRAY		72525-14010-13	1	467	
	8210-	BJ60,HJ60,FJ60	LH,SHADOW GRAY		72526-14010-13	1	467	
	8504-	BJ60,HJ60,FJ60	RH,BROWN		72525-14010-56	1	555	
	8504-	BJ60,HJ60,FJ60	LH,BROWN		72526-14010-56	1	555	
	8411-8504	FJ60	RH,DARK BROWN		72525-14010-16	1	515	554
	8411-8504	FJ60	LH,DARK BROWN		72526-14010-16	1	515	554
		72537 COVER, RECLINING HINGE OUTER, RH						
	8411-8504	BJ60	SEPIA BROWN		72551-90A00-16	1	515	554
	8008-8411	BJ60,FJ60	DARK BROWN		72551-90A00-06	1	455	514
	8210-	BJ60,HJ60,FJ60	SHADOW GRAY		72551-90A00-03	1	467	
	8504-	BJ60,HJ60,FJ60	SEPIA BROWN		72551-90A00-16	1	555	
	8411-8504	FJ60	DARK BROWN		72551-90A00-06	1	515	554
		72538 COVER, RECLINING HINGE OUTER, LH						
	8411-8504	BJ60	SEPIA BROWN		72552-90A00-16	1	515	554
	8008-8411	BJ60,FJ60	DARK BROWN		72552-90A00-06	1	455	514
	8210-	BJ60,HJ60,FJ60	SHADOW GRAY		72552-90A00-03	1	467	
	8504-	BJ60,HJ60,FJ60	SEPIA BROWN		72552-90A00-16	1	555	
	8411-8504	FJ60	DARK BROWN		72552-90A00-06	1	515	554
		72603 LOCK SUB-ASSY, REAR SEAT BACK, RH						
	8008-8210	BJ60,FJ60			72630-90A00-	1	455	466
C	8210-8604	BJ60,FJ60			# 72630-90A02- (72630-90A10-)	1	467	572

GENUINE TOYOTA PARTS

	PROD.DATE	MODELS	DESCRIPTION	R/P	PART NUMBER	QTY	REV.REF.CODE FROM	REV.REF.CODE UP TO
		75557 JOINT, ROOF DRIP SIDE FINISH MOULDING						
	8008-	BJ60,HJ60,FJ60			75596-90A00-	4	455	
		75571B JOINT, BACK WINDOW MOULDING, UPPER						
C	8008-8608	BJ60,HJ60,FJ60			62795-90A00-	1	455	600
C	8608-	HJ60				1	601	
		75572 MOULDING, BACK WINDOW, LOWER						
C	8008-8608	BJ60,HJ60,FJ60			75575-90A00-	1	455	600
C	860S-	HJ60				1	601	
		75573 MOULDING, BACK WINDOW SIDE, RH						
C	8008-8608	BJ60,HJ60,FJ60			75812-90A00-	1	455	600
C	8608-	HJ60				1	601	
		75574 MOULDING, BACK WINDOW SIDE, LH						
C	8008-8608	BJ60,HJ60,FJ60			75813-90A00-	1	455	600
C	8608-	HJ60				1	601	
		75577 MOULDING, BACK WINDOW CORNER, LOWER RH						
C	8008-8608	BJ60,HJ60,FJ60			75583-90A00-	1	455	600
C	8608-	HJ60				1	601	
		75578 MOULDING, BACK WINDOW CORNER, LOWER LH						
C	8008-8608	BJ60,HJ60,FJ60			75583-90A00-	1	455	600
C	8608-	HJ60				1	601	
		75586A MOULDING, ROOF DRIP, REAR						
	8008-	BJ60,HJ60,FJ60			75586-90A00-	1	455	
		75641 MOULDING, QUARTER WINDOW, OUTSIDE FRONT RH						
	8008-	BJ60,HJ60,FJ60			75641-90A00-	1	455	
		75641C JOINT, QUARTER WINDOW MOULDING						
	8008-	BJ60,HJ60,FJ60			62795-90A00-	4	455	

	PROD.DATE	MODELS	DESCRIPTION	R/P	PART NUMBER	QTY	REV.REF.CODE FROM	REV.REF.CODE UP TO
		75642 MOULDING, QUARTER WINDOW, OUTSIDE FRONT LH						
	8008-	BJ60,HJ60,FJ60			75642-90A00-	1	455	
		75645 MOULDING, QUARTER WINDOW, OUTSIDE REAR RH						
	8008-	BJ60,HJ60,FJ60			75645-90A00-	1	455	
		75646 MOULDING, QUARTER WINDOW, OUTSIDE REAR LH						
	8008-	BJ60,HJ60,FJ60			75646-90A00-	1	455	
		75721 MOULDING, FRONT DOOR BELT, RH						
	8008-8601	BJ60,HJ60,FJ60			75710-90A00-	1	455	576
C	8601-8604	FJ60				1	577	572
C	8604-	FJ60			75710-90A02-	1	573	
	8601-	HJ60				1	577	
		75722 MOULDING, FRONT DOOR BELT, LH						
	8008-8601	BJ60,HJ60,FJ60			75720-90A00-	1	455	576
C	8601-8604	FJ60				1	577	572
C	8604-	FJ60			75720-90A02-	1	573	
	8601-	HJ60				1	577	
		75733 MOULDING, FRONT DOOR WINDOW FRAME, REAR RH						
	8008-	BJ60,HJ60,FJ60			75755-90A00-	1	455	
		75734 MOULDING, FRONT DOOR WINDOW FRAME, REAR LH						
	8008-	BJ60,HJ60,FJ60			75756-90A00-	1	455	
		75737 MOULDING, FRONT DOOR WINDOW FRAME, FRONT RH						
	8008-	BJ60,HJ60,FJ60			75751-90A00-	1	455	
		75738 MOULDING, FRONT DOOR WINDOW FRAME, FRONT LH						
	8008-	BJ60,HJ60,FJ60			75752-90A00-	1	455	
		75751 MOULDING, REAR DOOR BELT, RH						
	8008-8512	BJ60,HJ60,FJ60			75730-90A00-	1	455	574
C	8512-8604	FJ60				1	575	572
C	8604-	FJ60			75730-90A01-	1	573	

	PROD.DATE	MODELS	DESCRIPTION	R/P	PART NUMBER	QTY	REV.REF.CODE FROM	REV.REF.CODE UP TO
		72603 LOCK SUB-ASSY, REAR SEAT BACK, RH CONTINUED						
C	8604-8608	FJ60			72630-90A09-	1	573	600
C	8510-8608	HJ60				1	567	600
C	8608-	HJ60,FJ60			72630-90A17-	1	601	
		72604 LOCK SUB-ASSY, REAR SEAT BACK, LH						
	8008-8210	BJ60,FJ60			72640-90A00-	1	455	466
C	8210-8604	BJ60,FJ60		#	72640-90A02 (72640-90A10-)	1	467	572
C	8604-8608	FJ60			72640-90A09-	1	573	600
C	8510-8608	HJ60				1	567	600
C	8608-	HJ60			72640-90A17-	1	601	
		72607 STRIKER SUB-ASSY, REAR SEAT CUSHION LOCK						
	8008-	BJ60,HJ60,FJ60			72607-90A00-	1	455	
		72610 LOCK ASSY, REAR SEAT CUSHION						
	8411-8504	BJ60	SEPIA BROWN		72660-90A00-16	1	515	554
	8008-8411	BJ60,FJ60	DARK BROWN		72660-90A00-06	1	455	514
	8210-	BJ60,HJ60,FJ60	GRAY		72660-90A00-03	1	467	
	8504-	BJ60,HJ60,FJ60	SEPIA BROWN		72660-90A00-16	1	555	
	8411-8504	FJ60	DARK BROWN		72660-90A00-06	1	515	554
		72651 ROD, REAR SEAT BACK LOCK						
	8008-	BJ60,HJ60,FJ60			72651-90A00-	1	455	
		72670A STRIKER ASSY, REAR SEAT BACK LOCK, RH						
C	8008-8604	BJ60,FJ60			72670-90A00-	1	455	572
C	8604-	FJ60			72670-90A02-	1	573	
	8510-	HJ60				1	567	
		72680A STRIKER ASSY, REAR SEAT BACK LOCK, LH						
C	8008-8604	BJ60,FJ60			72680-90A00-	1	455	572
C	8604-	HJ60,FJ60			72680-90A02-	1	573	

GENUINE TOYOTA PARTS

PROD.DATE	MODELS	DESCRIPTION	R/P	PART NUMBER	QTY	REV.REF.CODE FROM	REV.REF.CODE UP TO
	72680B LOCK ASSY, REAR SEAT CUSHION, LH						
8510-	HJ60			72680-90A02-	1	567	
	72694 COVER, REAR SEAT CUSHION LOCK						
8411-8504	BJ60	SEPIA BROWN		72694-90A00-16	1	515	554
8008-8411	BJ60,FJ60	DARK BROWN		72694-90A00-06	1	455	514
8210-	BJ60,HJ60,FJ60	SHADOW GRAY		72694-90A00-03	1	467	
8504-	BJ60,HJ60,FJ60	SEPIA BROWN		72694-90A00-16	1	555	
8411-8504	FJ60	DARK BROWN		72694-90A00-06	1	515	554

GENUINE TOYOTA PARTS

	PROD.DATE	MODELS	DESCRIPTION	R/P	PART NUMBER	QTY	REV.REF.CODE FROM	REV.REF.CODE UP TO
		75751 MOULDING, REAR DOOR BELT, RH CONTINUED						
	8512-	HJ60			75730-90A01-	1	575	
		75752 MOULDING, REAR DOOR BELT, LH						
	8008-8512	BJ60,HJ60,FJ60			75740-90A00-	1	455	574
C	8512-8604	FJ60				1	575	572
C	8604-	FJ60			75740-90A01-	1	573	
	8512-	HJ60				1	575	
		75761 MOULDING, REAR DOOR WINDOW FRAME, REAR RH						
	8008-	BJ60,HJ60,FJ60			75765-90A00-	1	455	
		75762 MOULDING, REAR DOOR WINDOW FRAME, REAR LH						
	8008-	BJ60,HJ60,FJ60			75766-90A00-	1	455	
		75765 MOULDING, REAR DOOR WINDOW FRAME, UPPER RH						
	8003-	BJ60,HJ60,FJ60			75763-90A00-	1	455	
		75766 MOULDING, REAR DOOR WINDOW FRAME, UPPER LH						
	8008-	BJ60,HJ60,FJ60			75764-90A00-	1	455	
		75767 MOULDING, REAR DOOR WINDOW FRAME, FRONT RH						
	8008-	BJ60,HJ60,FJ60			75761-90A00-	1	455	
		75768 MOULDING, REAR DOOR WINDOW FRAME, FRONT LH						
	8008-	BJ60,HJ60,FJ60			75762-90A00-	1	455	
		75851 MOULDING, ROCKER PANEL, RH						
	8008-	BJ60,HJ60,FJ60			75850-69015-	1	455	
		75851D CLIP (FOR ROCKER PANEL MOULDING SET)						
	8008-	BJ60,HJ60,FJ60			75867-20020-	10	455	
		75852 MOULDING, ROCKER PANEL, LH						
	8008-	BJ60,HJ60,FJ60			75860-69015-	1	455	

PROD.DATE	MODELS	DESCRIPTION	R/P	PART NUMBER	QTY	REV.REF.CODE FROM	REV.REF.CODE UP TO
	75953 PLATE, FRONT DOOR SCUFF, INSIDE RH						
8411-8504	BJ60	SEPIA BROWN		67913-90A00-16	1	515	554
8008-8411	BJ60,FJ60	DARK BROWN		67913-90A00-06	1	455	514
8210-	BJ60,HJ60,FJ60	SHADOW GRAY		67913-90A00-03	1	467	
8504-	BJ60,HJ60,FJ60	SEPIA BROWN		67913-90A00-16	1	555	
8411-8504	FJ60	DARK BROWN		67913-90A00-06	1	515	554
	75954 PLATE, FRONT DOOR SCUFF, INSIDE LH						
8411-8504	BJ60	SEPIA BROWN		67913-90A00-16	1	515	554
8008-8411	BJ60,FJ60	DARK BROWN		67913-90A00-06	1	455	514
8210-	BJ60,HJ60,FJ60	SHADOW GRAY		67913-90A00-03	1	467	
8504-	BJ60,HJ60,FJ60	SEPIA BROWN		67913-90A00-16	1	555	
8411-8504	FJ60	DARK BROWN		67913-90A00-06	1	515	554
	75957 PLATE, REAR DOOR SCUFF, INSIDE RH						
8411-8504	BJ60	SEPIA BROWN		67917-90A00-16	1	515	554
8008-8411	BJ60,FJ60	DARK BROWN		67917-90A00-06	1	455	514
8210-	BJ60,HJ60,FJ60	SHADOW GRAY		67917-90A00-03	1	467	
8504-	BJ60,HJ60,FJ60	SEPIA BROWN		67917-90A00-16	1	555	
8411-8504	FJ60	DARK BROWN		67917-90A00-06	1	515	554
	75958 PLATE, REAR DOOR SCUFF, INSIDE LH						
8411-8504	BJ60	SEPIA BROWN		67917-90A00-16	1	515	554
8008-8411	BJ60,FJ60	DARK BROWN		67917-90A00-06	1	455	514
8210-	BJ60,HJ60,FJ60	SHADOW GRAY		67917-90A00-03	1	467	
8504-	BJ60,HJ60,FJ60	SEPIA BROWN		67917-90A00-16	1	555	
8411-8504	FJ60	DARK BROWN		67917-90A00-06	1	515	554

GENUINE TOYOTA PARTS

(8008-)

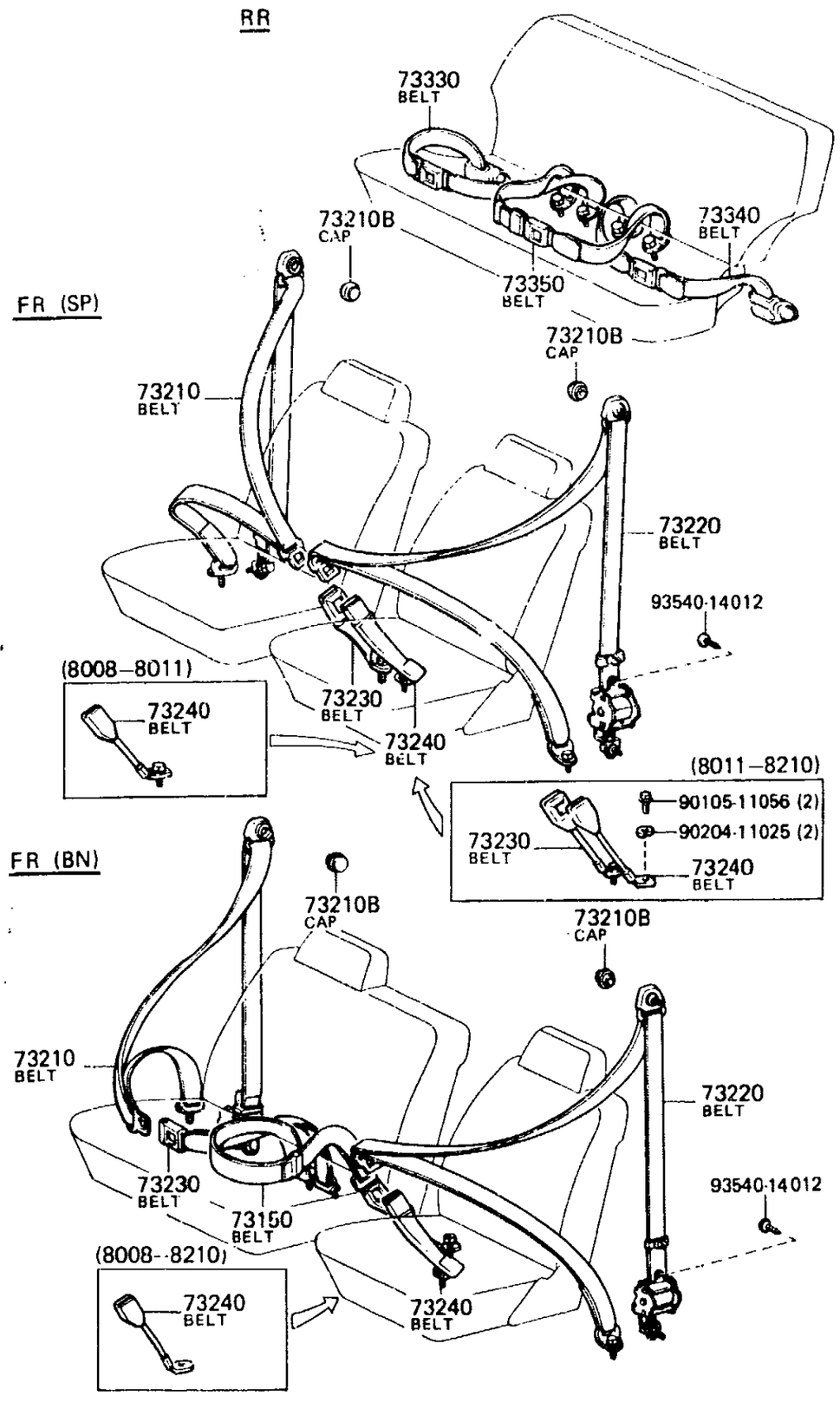

MB B742-C

	PROD.DATE	MODELS	DESCRIPTION	R/P	PART NUMBER	QTY	REV.REF.CODE FROM	REV.REF.CODE UP TO
	FIG.	71-52 SEAT BELT						
		73150 BELT ASSY, FRONT SEAT LAP TYPE, CENTER						
	8008-8110	BJ60,FJ60	BENCH SEAT		73150-90A00-	1	455	458
	8110-8210	FJ60	BENCH SEAT			1	459	466
		73210 BELT ASSY, FRONT SEAT OUTER, RH						
	8411-8504	BJ60	GRAY		73210-90A13-03	1	515	554
	8411-8504	BJ60	BROWN		73210-90A13-06	1	515	554
	8008-8210	BJ60,FJ60			73210-90A04-	1	455	466
	8210-8411	BJ60,FJ60	GRAY		73210-90A06-03	1	467	514
	8210-8411	BJ60,FJ60	BROWN		73210-90A06-06	1	467	514
C	8504-8604	BJ60,FJ60	GRAY		73210-90A13-03	1	553	572
C	8504-8604	BJ60,FJ60	BROWN		73210-90A13-06	1	555	572
	8411-8504	FJ60	GRAY		73210-90A06-03	1	515	554
	8411-8504	FJ60	BROWN		73210-90A06-06	1	515	554
C	8604-	FJ60	GRAY		73210-90A21-03	1	573	
C	8604-	FJ60	BROWN		73210-90A21-06	1	573	
	8510-	HJ60	GRAY		73210-90A21-03	1	567	
	8510-	HJ60	BROWN		73210-90A21-06	1	567	
		73210B CAP (FOR FRONT SEAT OUTER BELT)						
	8008-8210	BJ60,FJ60	BROWN		73178-12010-26	2	455	466
		73220 BELT ASSY, FRONT SEAT OUTER, LH						
	8411-8504	BJ60	GRAY		73220-90A02-03	1	515	554
	8411-8504	BJ60	BROWN		73220-90A02-06	1	515	554
	8008-8210	BJ60,FJ60			73210-90A04-	1	455	466
	8210-8411	BJ60,FJ60	GRAY		73210-90A06-03	1	467	514
	8210-8411	BJ60,FJ60	BROWN		73210-90A06-06	1	467	514
C	8504-8604	BJ60,FJ60	GRAY		73220-90A02-03	1	555	572
C	8504-8604	BJ60,FJ60	BROWN		73220-90A02-06	1	555	572
	8411-8504	FJ60	GRAY		73210-90A06-03	1	515	554
	8411-8504	FJ60	BROWN		73210-90A06-06	1	515	554
C	8604-	FJ60	GRAY		73220-90A10-03	1	573	

GENUINE TOYOTA PARTS

(8008-)

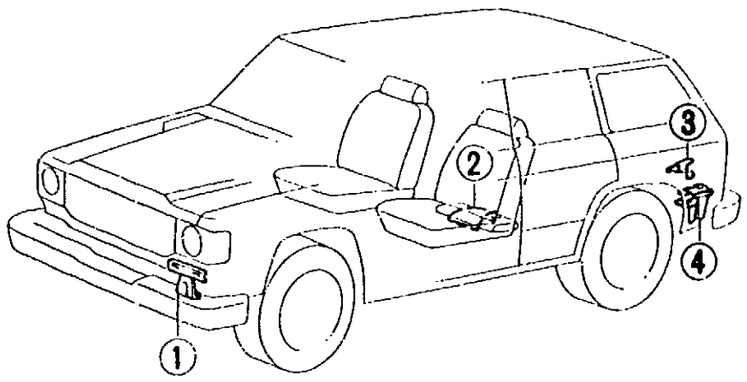

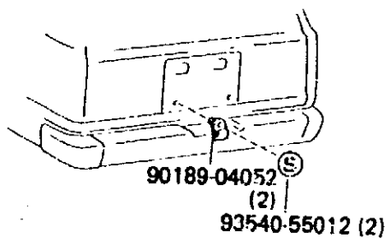

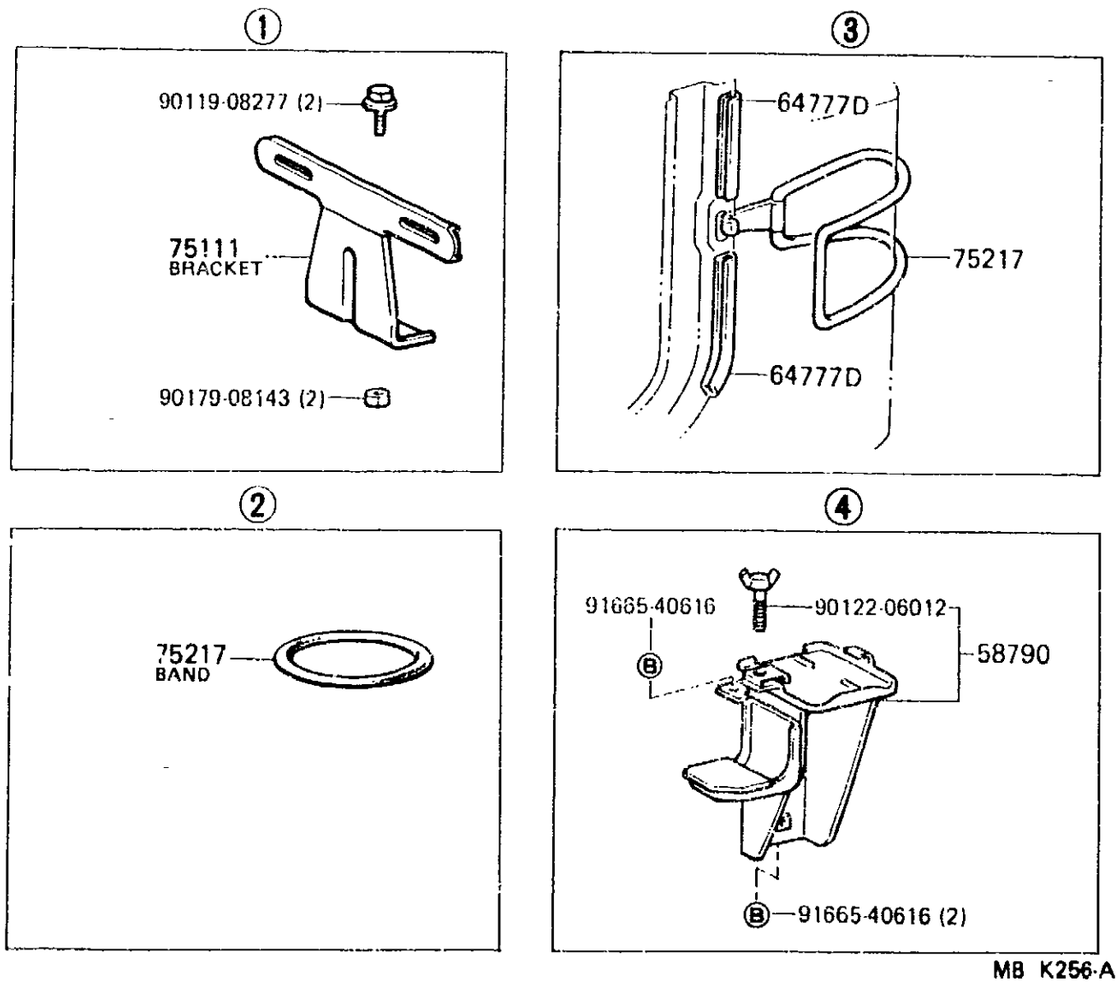

MB K256-A

	PROD. DATE	MODELS	DESCRIPTION	R/P	PART NUMBER	QTY	REV. REF. CODE FROM	REV. REF. CODE UP TO
	FIG.	75-54 TOOL BOX & LICENSE PLATE BRACKET						
		58790	CARRIER ASSY, JACK					
C	8604-	FJ60			58790-90A00-	1	573	
	8510-	HJ60				1	567	
		64777D	PROTECTOR, QUARTER INNER					
C	8604-	FJ60			64777-90A00-	1	573	
	8510-	HJ60				1	567	
		75111	BRACKET, FRONT LICENSE PLATE					
C	8008-8510	BJ60, FJ60	W/WINCH		75101-60011-	1	455	566
		75217	BAND, TOOL BAG					
C	8008-8604	BJ60, FJ60			58781-90A00-	1	455	572
C	8604-	FJ60			58705-90A01-	1	573	
	8510-	HJ60				1	567	

	PROD.DATE	MODELS	DESCRIPTION	R/P	PART NUMBER	QTY	REV.REF.CODE FROM	REV.REF.CODE UP TO
		73220 BELT ASSY, FRONT SEAT OUTER, LH						
		CONTINUED						
C	8604-	FJ60	BROWN		73220-90A10-06	1	573	
	8510-	HJ60	GRAY		73220-90A10-03	1	567	
	8510-	HJ60	BROWN		73220-90A10-06	1	567	
		73230 BELT ASSY, FRONT SEAT INNER, RH						
	8411-8504	BJ60	GRAY		73230-90A17-03	1	515	554
	8411-8504	BJ60	BROWN		73230-90A17-06	1	515	554
	8008-8110	BJ60,FJ60	BENCH SEAT		73230-90A01-	1	455	458
	8008-8210	BJ60,FJ60	SEPARATE SEAT		73230-90A04-	1	455	466
	8210-8411	BJ60,FJ60	SEPARATE SEAT,GRAY		73230-90A10-03	1	467	514
	8210-8411	BJ60,FJ60	SEPARATE SEAT,BROWN		73230-90A10-06	1	467	514
	8504-	BJ60,HJ60,FJ60	GRAY		73230-90A17-03	1	555	
	8504-	BJ60,HJ60,FJ60	BROWN		73230-90A17-06	1	555	
	8110-8110	FJ60	BENCH SEAT		73230-90A01-	1	459	458
	8411-8504	FJ60	SEPARATE SEAT,GRAY		73230-90A10-03	1	515	554
	8411-8504	FJ60	SEPARATE SEAT,BROWN		73230-90A10-06	1	515	554
		73240 BELT ASSY, FRONT SEAT INNER, LH						
	8411-8504	BJ60	GRAY		73240-90A16-03	1	515	554
	8411-8504	BJ60	BROWN		73240-90A16-06	1	515	554
	8008-8011	BJ60,FJ60			# 73240-90A00- (73240-90A05-) •(90105-11056-) •(90204-11025-)	1	455	
	8011-8210	BJ60,FJ60			73240-90A05-	1		466
	8210-8411	BJ60,FJ60	GRAY		73240-90A09-03	1	467	514
	8210-8411	BJ60,FJ60	BROWN		73240-90A09-06	1	467	514
C	8504-8604	BJ60,FJ60	GRAY		73240-90A16-03	1	555	572
C	8504-8604	BJ60,FJ60	BROWN		73240-90A16-06	1	555	572
	8411-8504	FJ60	GRAY		73240-90A09-03	1	515	554
	8411-8504	FJ60	BROWN		73240-90A09-06	1	515	554

	PROD.DATE	MODELS	DESCRIPTION	R/P	PART NUMBER	QTY	REV.REF.CODE FROM	REV.REF.CODE UP TO
		73240 BELT ASSY, FRONT SEAT INNER, LH						
		CONTINUED						
C	8604-	FJ60	GRAY		73240-90A20-03	1	573	
C	8604-	FJ60	BROWN		73240-90A20-06	1	573	
	8510-	HJ60	GRAY		73240-90A20-03	1	567	
	8510-	HJ60	BROWN		73240-90A20-06	1	567	
		73330 BELT ASSY, REAR SEAT LAP TYPE, RH						
	8411-8504	BJ60	SEPIA BROWN		73330-90A05-16	1	515	554
	8008-8110	BJ60,FJ60			73330-90A01-	1	455	458
	8110-8411	BJ60,FJ60	BROWN		73330-90A05-06	1	459	514
	8210-	BJ60,HJ60,FJ60	GRAY		73330-90A05-03	1	467	
	8504-	BJ60,HJ60,FJ60	SEPIA BROWN		73330-90A05-16	1	555	
	8411-8504	FJ60	BROWN		73330-90A05-06	1	515	554
		73340 BELT ASSY, REAR SEAT LAP TYPE, LH						
	8411-8504	BJ60	SEPIA BROWN		73330-90A05-16	1	515	554
	8008-8110	BJ60,FJ60			73330-90A01-	1	455	458
	8110-8411	BJ60,FJ60	BROWN		73330-90A05-06	1	459	514
	8210-	BJ60,HJ60,FJ60	GRAY		73330-90A05-03	1	467	
	8504-	BJ60,HJ60,FJ60	SEPIA BROWN		73330-90A05-16	1	555	
	8411-8504	FJ60	BROWN		73330-90A05-06	1	515	554
		73350 BELT ASSY, REAR SEAT LAP TYPE, CENTER						
	8411-8504	BJ60	SEPIA BROWN		73330-90A04-16	1	515	554
	8008-8411	BJ60,FJ60	BROWN		73330-90A04-06	1	455	514
	8210-	BJ60,HJ60,FJ60	GRAY		73330-90A04-03	1	467	
	8504-	BJ60,HJ60,FJ60	SEPIA BROWN		73330-90A04-16	1	555	
	8411-8504	FJ60	BROWN		73330-90A04-06	1	515	554

(8008-)

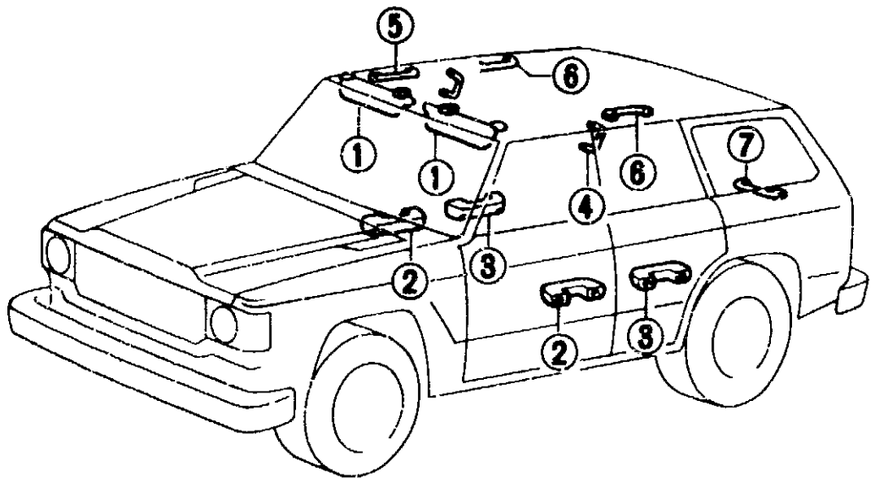

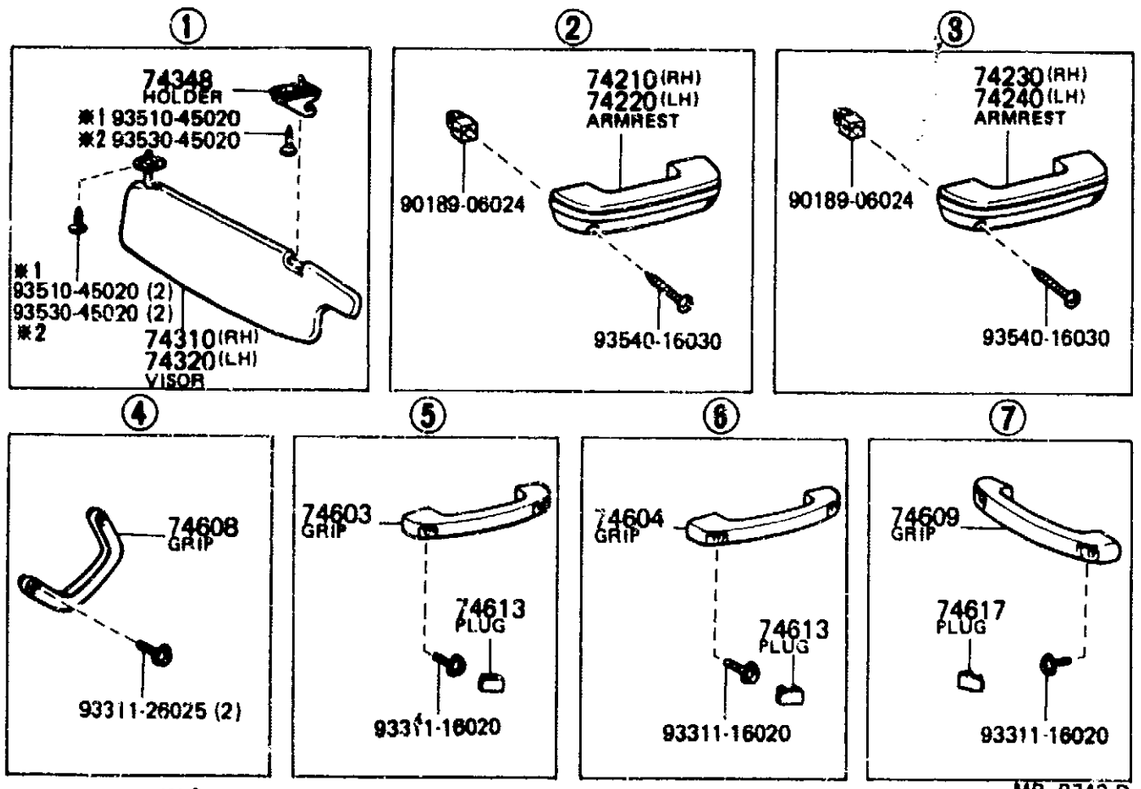

MB B743-D

※1 (8008-8411)
※2 (8411-)

GENUINE TOYOTA PARTS

PROD.DATE	MODELS	DESCRIPTION	R/P	PART NUMBER	QTY	REV.REF.CODE FROM	REV.REF.CODE UP TO
FIG.	74-51 ARMREST & VISOR						
	74210 ARMREST ASSY, FRONT, RH						
8411-8504	BJ60	SEPIA BROWN		74250-90A00-16	1	515	554
8008-8101	BJ60,FJ60			74250-20010-16	1	455	
8101-8411	BJ60,FJ60	DARK BROWN		74250-90A00-06	1		514
8210-	BJ60,HJ60,FJ60	SHADOW GRAY		74250-90A00-03	1	467	
8504-	BJ60,HJ60,FJ60	SEPIA BROWN		74250-90A00-16	1	555	
8411-8504	FJ60	DARK BROWN		74250-90A00-06	1	515	554
	74220 ARMREST ASSY, FRONT, LH						
8411-8504	BJ60	SEPIA BROWN		74250-90A00-16	1	515	554
8008-8101	BJ60,FJ60			74250-20010-16	1	455	
8101-8411	BJ60,FJ60	DARK BROWN		74250-90A00-06	1		514
8210-	BJ60,HJ60,FJ60	SHADOW GRAY		74250-90A00-03	1	467	
8504-	BJ60,HJ60,FJ60	SEPIA BROWN		74250-90A00-16	1	555	
8411-8504	FJ60	DARK BROWN		74250-90A00-06	1	515	554
	74230 ARMREST ASSY, REAR, RH						
8411-8504	BJ60	SEPIA BROWN		74250-90A00-16	1	515	554
8008-8101	BJ60,FJ60			74250-20010-16	1	455	
8101-8411	BJ60,FJ60	DARK BROWN		74250-90A00-06	1		514
8210-	BJ60,HJ60,FJ60	SHADOW GRAY		74250-90A00-03	1	467	
8504-	BJ60,HJ60,FJ60	SEPIA BROWN		74250-90A00-16	1	555	
8411-8504	FJ60	DARK BROWN		74250-90A00-06	1	515	554
	74240 ARMREST ASSY, REAR, LH						
8411-8504	BJ60	SEPIA BROWN		74250-90A00-16	1	515	554
8008-8101	BJ60,FJ60			74250-20010-16	1	455	
8101-8411	BJ60,FJ60	DARK BROWN		74250-90A00-06	1		514

	PROD.DATE	MODELS	DESCRIPTION	R/P	PART NUMBER	QTY	REV.REF.CODE FROM	REV.REF.CODE UP TO
		74240 ARMREST ASSY, REAR, LH CONTINUED						
	8210-	BJ60,HJ60,FJ60	SHADOW GRAY		74250-90A00-03	1	467	
	8504-	BJ60,HJ60,FJ60	SEPIA BROWN		74250-90A00-16	1	555	
	8411-8504	FJ60	DARK BROWN		74250-90A00-06	1	515	554
		74310 VISOR ASSY, RH						
	8411-8504	BJ60	W/MIRROR,IVORY		74310-90A01-18	1	515	554
	8008-8411	BJ60,FJ60	W/MIRROR,IVORY		74310-90A01-08	1	455	514
	8504-8509	BJ60,FJ60	W/MIRROR,IVORY		74310-90A01-18	1	555	
C	8509-8604	BJ60,FJ60	W/MIRROR,IVORY		74310-90A03-18	1		572
	8008-8110	BJ60,FJ60..WGV	W/O MIRROR HOLE,IVORY		74310-90A00-08	1	455	458
	8411-8504	FJ60	W/MIRROR,IVORY		74310-90A01-08	1	515	554
C	8604-8608	FJ60	IVORY		74310-90A27-08	1	573	600
C	8608-	FJ60	IVORY		74310-90A52-08	1	601	
C	8510-8608	HJ60	W/MIRROR,IVORY		74310-90A04-18	1	567	600
C	8608-	HJ60	W/MIRROR,IVORY		74310-90A39-08	1	601	
		74320 VISOR ASSY, LH						
	8409-8411	BJ60	IVORY	#	74320-90A00-08 (74320-90A04-08)	1	541	514
	8008-8409	BJ60,FJ60	IVORY			1	455	540
C	8411-8608	BJ60,HJ60	IVORY		74320-90A12-08	1	515	600
	8409-8504	FJ60	IVORY		74320-90A11-08	1	541	554
C	8504-8604	FJ60	IVORY		74320-90A13-08	1	555	572
C	8604-	FJ60	IVORY		74320-90A24-08	1	573	
C	8608-	FJ60	IVORY		74320-90A42-08	1	601	
C	8608-	HJ60	IVORY		74320-90A31-08	1	601	

	PROD.DATE	MODELS	DESCRIPTION	R/P	PART NUMBER	QTY	REV.REF.CODE FROM	REV.REF.CODE UP TO
		74348 HOLDER, VISOR						
	8411-8504	BJ60	IVORY		74348-12010-18	2	515	554
	8008-8411	BJ60,FJ60	IVORY		74348-12010-08	2	455	514
	8504-	BJ60,HJ60,FJ60	IVORY		74348-12010-18	2	555	
	8411-8504	FJ60	IVORY		74348-12010-08	2	515	554
C	8608-	HJ60,FJ60	IVORY		74348-12010-18	1	601	
		74603 GRIP SUB-ASSY, ASSIST, FRONT						
	8411-8504	BJ60	IVORY		74610-10020-18	1	515	554
	8008-8411	BJ60,FJ60	IVORY		74610-10020-08	1	455	514
	8504-	BJ60,HJ60,FJ60	IVORY		74610-10020-18	1	555	
	8411-8504	FJ60	IVORY		74610-10020-08	1	515	554
		74604 GRIP SUB-ASSY, ASSIST, REAR						
	8411-8504	BJ60	IVORY		74610-10020-18	2	515	554
	8008-8411	BJ60,FJ60	IVORY		74610-10020-08	2	455	514
	8504-	BJ60,HJ60,FJ60	IVORY		74610-10020-18	2	555	
	8411-8504	FJ60	IVORY		74610-10020-08	2	515	554
		74608 GRIP SUB-ASSY, REAR DOOR ASSIST						
	8411-8504	BJ60	IVORY		74620-90A00-18	2	515	554
	8008-8101	BJ60,FJ60	IVORY		74620-87001-08	2	455	
	8101-8411	BJ60,FJ60		#	74620-90A00-.. (74620-90A00-08)	2		514
	8504-	BJ60,HJ60,FJ60	IVORY		74620-90A00-18	2	555	
	8411-8504	FJ60	IVORY		74620-90A00-08	2	515	554
		74609 GRIP ASSY, BACK DOOR ASSIST						
	8411-8504	BJ60	IVORY		74610-10020-18	1	515	554
	8008-8411	BJ60,FJ60	IVORY		74610-10020-08	1	455	514
	8504-	BJ60,HJ60,FJ60	IVORY		74610-10020-18	1	555	
	8411-8504	FJ60	IVORY		74610-10020-08	1	515	554
		74613 PLUG, ASSIST GRIP						
	8411-8504	BJ60	IVORY		74617-14010-18	6	515	554

PROD.DATE	MODELS	DESCRIPTION	R/P	PART NUMBER	QTY	REV.REF.CODE FROM	REV.REF.CODE UP TO
	74613 PLUG, ASSIST GRIP CONTINUED						
8008-8411	BJ60,FJ60	IVORY		74617-14010-08	6	455	514
8504-	BJ60,HJ60,FJ60	IVORY		74617-14010-18	6	555	
8411-8504	FJ60	IVORY		74617-14010-08	6	515	554
	74617 PLUG, BACK DOOR ASSIST GRIP						
8411-8504	BJ60	IVORY		74617-14010-18	2	515	554
8008-8411	BJ60,FJ60	IVORY		74617-14010-08	2	455	514
8504-	BJ60,HJ60,FJ60	IVORY		74617-14010-18	2	555	
8411-8504	FJ60	IVORY		74617-14010-08	2	515	554

PROD.DATE	MODELS	DESCRIPTION	R/P	PART NUMBER	QTY	REV.REF.CODE FROM	REV.REF.CODE UP TO

(8008-)

2F

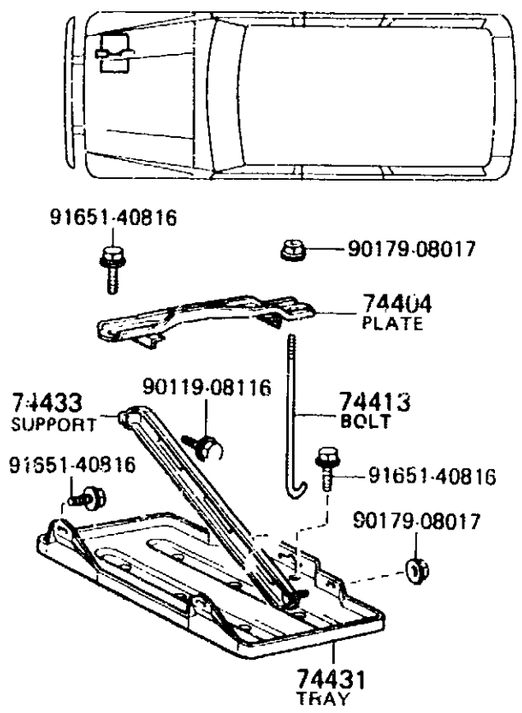

3B

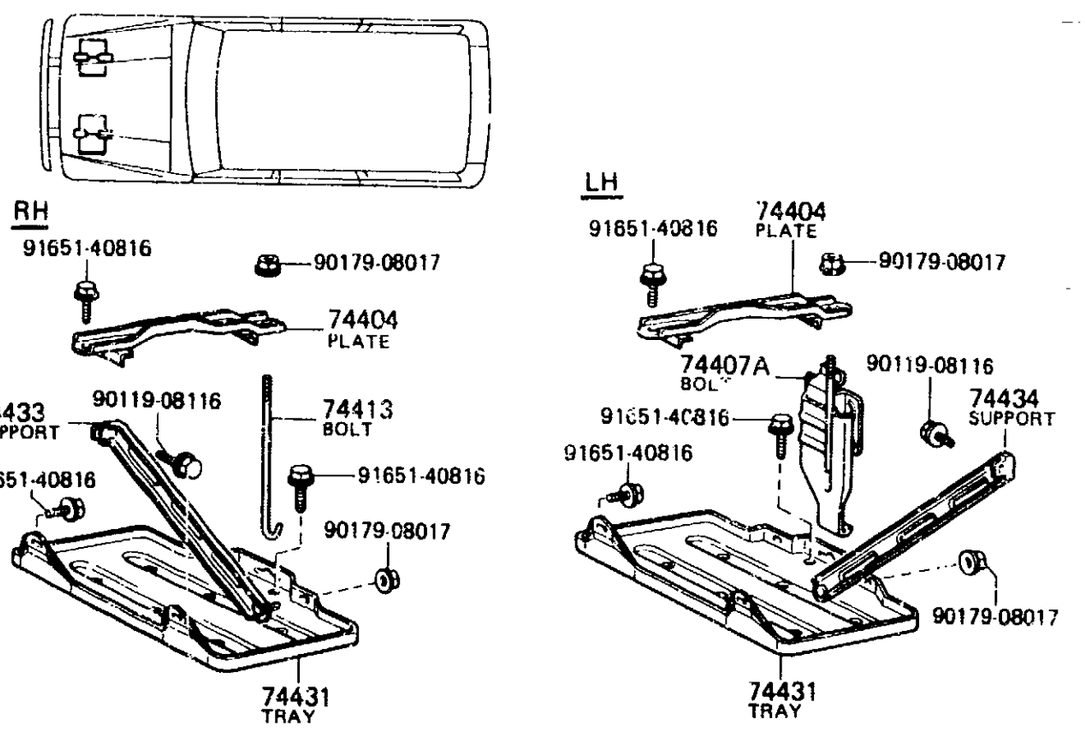

MB B670-B

GENUINE TOYOTA PARTS

	PROD.DATE	MODELS	DESCRIPTION	R/P	PART NUMBER	QTY	REV.REF.CODE FROM	REV.REF.CODE UP TO
	FIG.	74-54 BATTERY CARRIER						
		74404 PLATE SUB-ASSY, BATTERY SET						
C	8008-	BJ60,HJ60,FJ60			74404-90A00-	2	455	
		74407A BOLT SUB-ASSY, BATTERY CLAMP						
	8008-	BJ60,HJ60			74407-90A00-	1	455	
		74413 BOLT, BATTERY CLAMP						
	8008-	BJ60,HJ60,FJ60			74451-90A00-	1	455	
		74431 TRAY, BATTERY						
C	8008-	BJ60,HJ60,FJ60			74431-90A00-	2	455	
		74433 SUPPORT, BATTERY TRAY, RH						
	8008-	BJ60,HJ60,FJ60			74433-90A00-	1	455	
		74434 SUPPORT, BATTERY TRAY, LH						
	8008-	BJ60,HJ60			74434-90A00-	1	455	

GENUINE TOYOTA PARTS

(8008-)

74518
PLATE

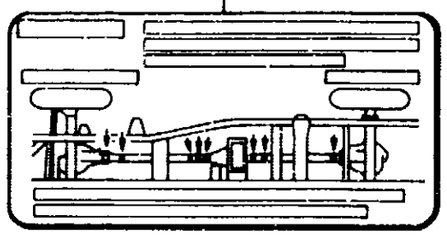

74519
PLATE

74519
PLATE

74519
PLATE

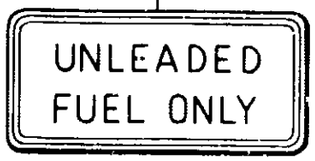

74556A
PLATE

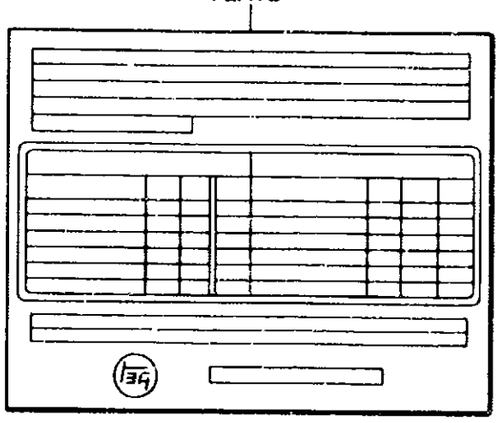

74533
PLATE

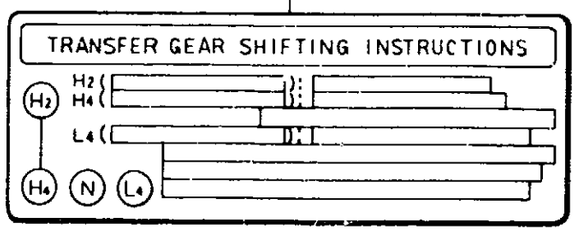

74564

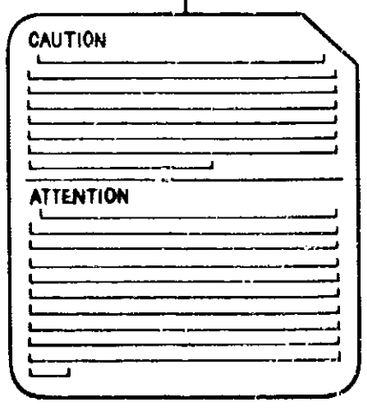

MB B744-E

PROD.DATE	MODELS	DESCRIPTION	R/P	PART NUMBER	QTY	REV.REF.CODE FROM	REV.REF.CODE UP TO
FIG.	74-55 CAUTION PLATE						
	74518 PLATE, MAINTENANCE CAUTION						
8112-8411	BJ60,FJ60			37199-60020-	1		514
8411-	FJ60				1	515	
	74519 PLATE, FUEL CAUTION						
8008-8210	BJ60			74559-22040-	1	455	466
8210-	BJ60,HJ60			74559-14030-	1	467	
8008-	FJ60..WGG	INSTRUMENT PANEL		74559-20030-	1	455	
8008-	FJ60..WGG	RR BODY SIDE PANEL		74559-20090-	1	455	
	74533 PLATE, TRANSFER CAUTION						
8411-8504	BJ60			33621-60200-	1	515	554
8008-8411	BJ60,FJ60			33621-60110-	1	455	514
8411-	BJ60,HJ60	FR DRIVE SW		33621-60230-	1	515	
8504-	BJ60,HJ60,FJ60..MTM			33621-60200-	1	555	
8411-8504	FJ60			33621-60110-	1	515	554
	74556A PLATE, EXHAUST EMISSION DATA						
8008-8102	FJ60..WGG	CALIFORNIA SPEC		74556-12112-	1	455	
8102-8108	FJ60..WGG	CALIFORNIA SPEC		74556-12113-	1		
8108-8210	FJ60..WGG	CALIFORNIA SPEC		74556-12116-	1		466
	74564 PLATE, OFFROAD VEHICLE CAUTION						
8411-	BJ60,HJ60			74564-35020-	1	515	
8409-	FJ60..USA			74564-35010-	1		

GENUINE TOYOTA PARTS

(8008-)

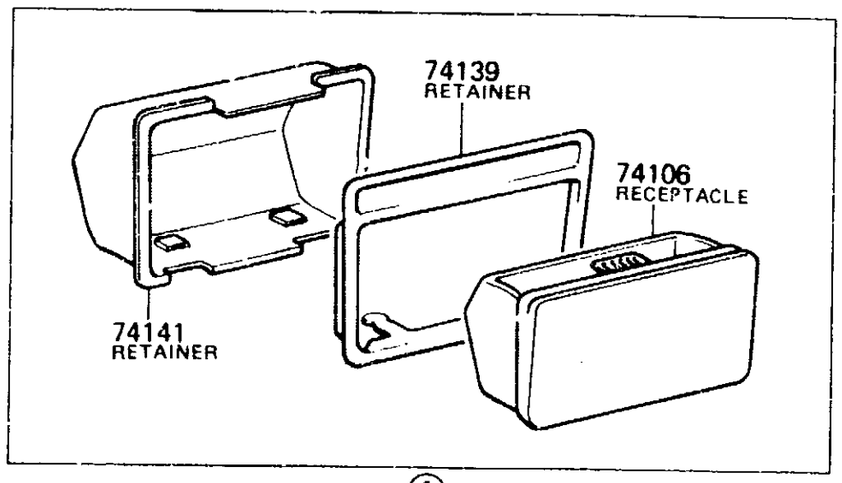

①

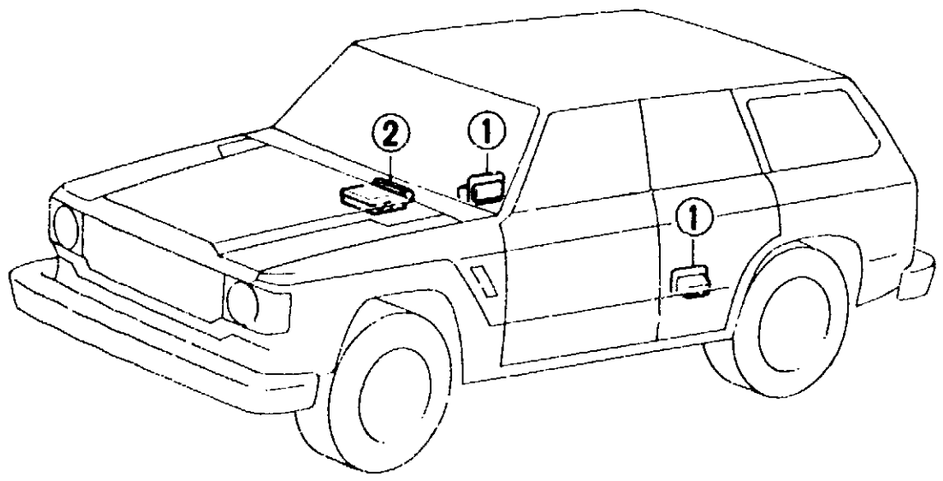

②

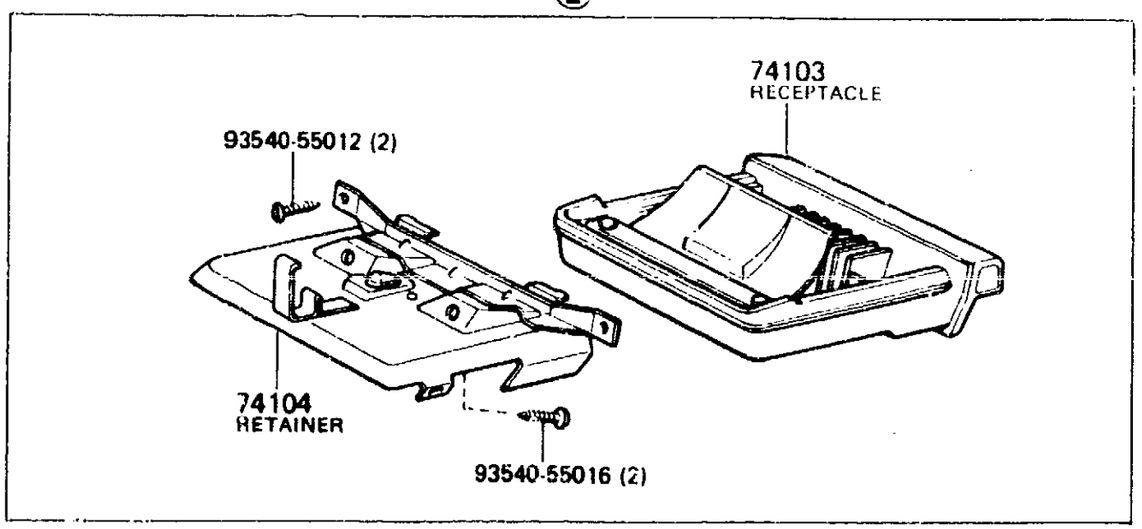

MB 8672-A

PROD.DATE	MODELS	DESCRIPTION	R/P	PART NUMBER	Q'TY	RCV.REF.CODE FROM	RCV.REF.CODE UP TO
FIG.	74-56 ASH RECEPTACLE						
	74103 RECEPTACLE SUB-ASSY, ASH, NO.1						
8008-	BJ60,HJ60,FJ60	BEIGE		74102-90A00-05	1	455	
8210-	BJ60,HJ60,FJ60	BLACK		74102-90A00-01	1	467	
	74104 RETAINER SUB-ASSY, ASH RECEPTACLE, NO.1						
8008-	BJ60,HJ60,FJ60			74104-90A00-	1	455	
	74106 RECEPTACLE SUB-ASSY, ASH, NO.2						
8008-	BJ60,HJ60,FJ60	DARK BROWN		74105-10010-26	2	455	
8210-	BJ60,HJ60,FJ60	SHADOW GRAY		74105-10010-13	2	467	
	74139 RETAINER, REAR ASH RECEPTACLE, OUTER						
8008-	BJ60,HJ60,FJ60			74135-10030-	2	455	
	74141 RETAINER, REAR ASH RECEPTACLE, INNER						
8008-	BJ60,HJ60,FJ60			74137-10030-	2	455	

(8008-)

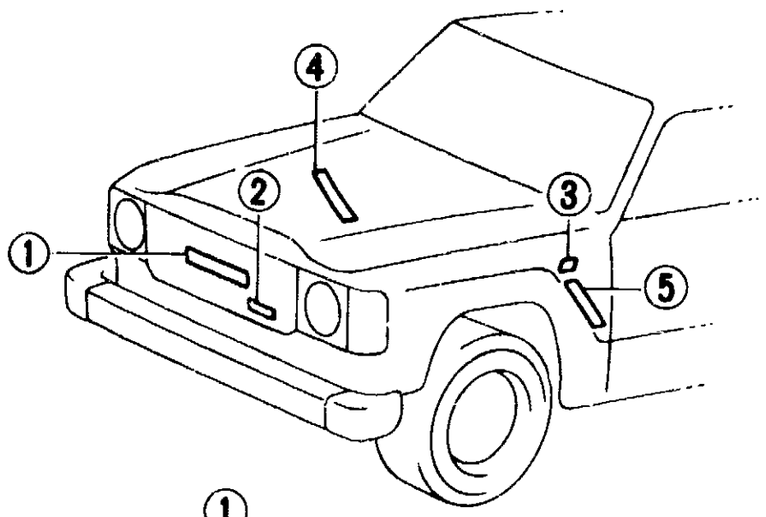

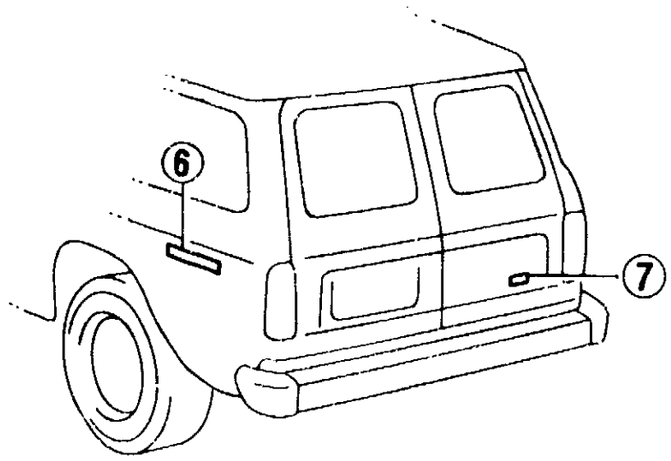

※

(-8410)	(8410-)
90468-05015	90467-07018

① (8510-)

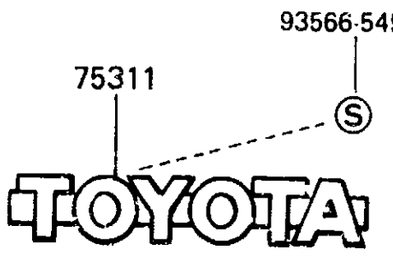

① (-8510)

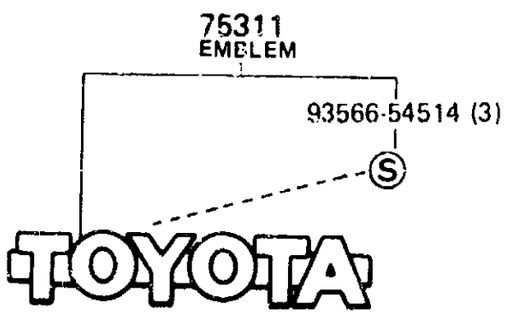

②

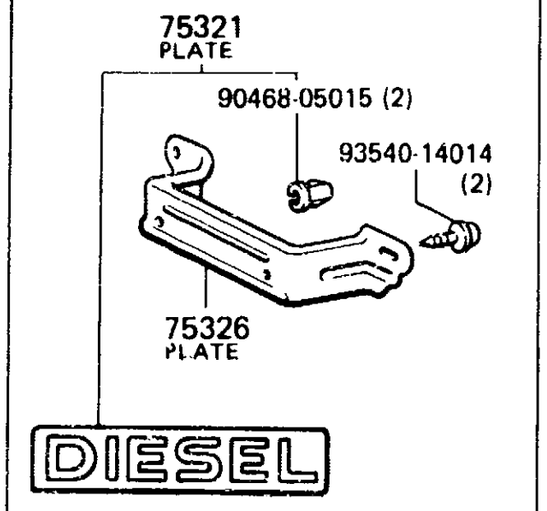

③

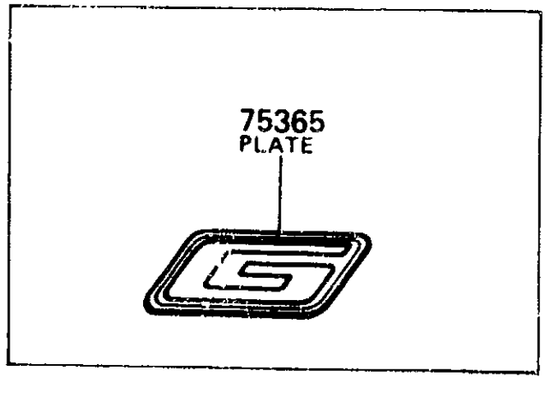

④

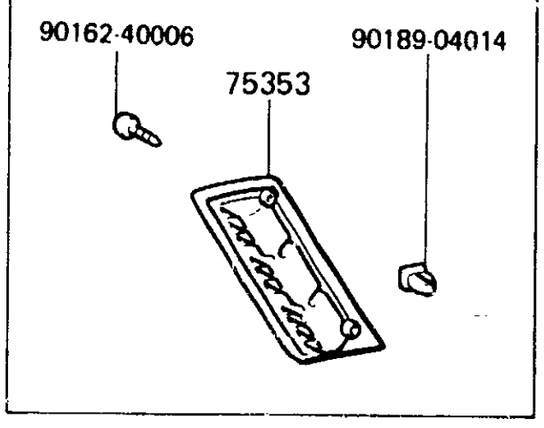

⑤

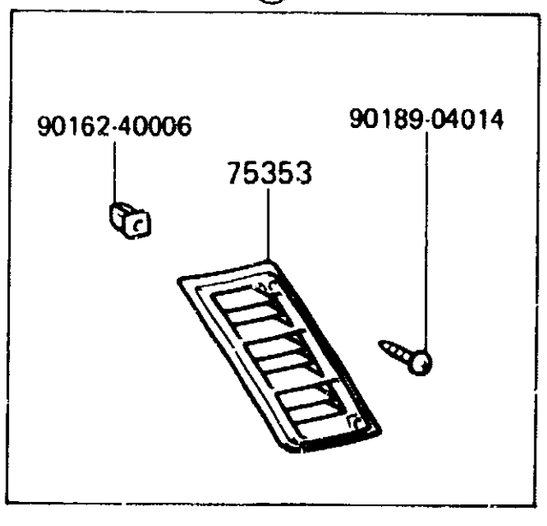

⑥

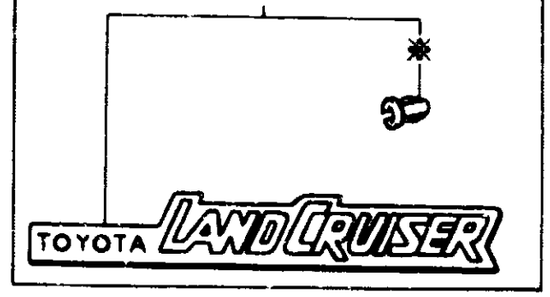

⑦

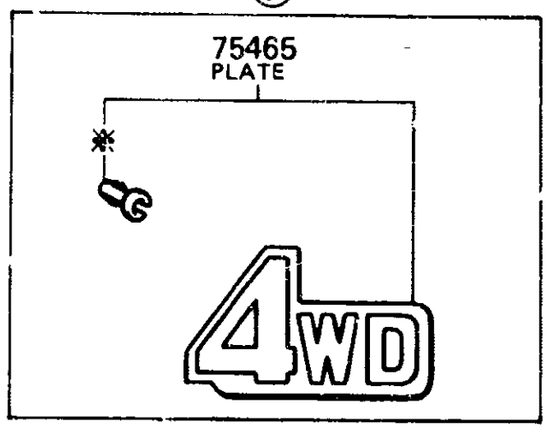

MB B745-I

FIG.77-51 **GENUINE TOYOTA PARTS**

3-M9

GENUINE TOYOTA PARTS

	PROD.DATE	MODELS	DESCRIPTION	R/P	PART NUMBER	QTY	REV.REF.CODE FROM	REV.REF.CODE UP TO
		77206 TUBE SUB-ASSY, FUEL TANK SUCTION						
	8008-8210	BJ60			# 77203-60040- (77240-60010-)	1	455	466
C	8210-8510	BJ60,HJ60			77240-60010-	1	467	566
C	8510-	BJ60,HJ60			77240-60011-	1	567	
	8008-8210	FJ60			77203-60050-	1	455	466
C	8210-8604	FJ60			# 77240-60020- (77240-60030-)	1	467	572
C	8604-	FJ60			77240-60030-	1	573	
		77206G GASKET (FOR FUEL TANK SUCTION TUBE)						
	8008-8210	BJ60,FJ60			83361-20030-	1	455	466
C	8210-8608	BJ60,HJ60,FJ60			77169-14020-	1	467	600
C	8608-	HJ60				1	601	
		77209 CONNECTOR SUB-ASSY, FUEL TUBE						
	8008-	BJ60,HJ60,FJ60			77209-60040-	1	455	
		77213 HOSE, FUEL TANK SUB INLET						
	8008-	BJ60,HJ60,FJ60			77213-60030-	1	455	
		77241 TUBE, FUEL MAIN, NO.1						
	8008-8210	BJ60			77253-60020-	1	455	466
	8210-8411	BJ60			77253-60021-	1	467	514
	8301-8411	BJ60			77253-60040-	1	482	514
	8411-8510	BJ60			77253-60041-	1	515	566
		77241A HOSE, FUEL, NO.1 (FOR MAIN TUBE, NO.1)						
	8008-8110	BJ60	*H,L=460		95332-08060-	1	455	
	8110-8510	BJ60	*H,L=750		95332-08080-	1		566
		77242 TUBE, FUEL MAIN, NO.2						
	8008-8411	BJ60	W/SEDIMENTER		77252-60060-	1	455	514
	8411-8510	BJ60			77252-60061-	1	515	566
	8510-	HJ60			77252-60051-	1	567	

	PROD.DATE	MODELS	DESCRIPTION	R/P	PART NUMBER	QTY	REV.REF.CODE FROM	REV.REF.CODE UP TO
		77242A HOSE, FUEL, NO.1 (FOR MAIN TUBE, NO.2)						
	8008-8411	BJ60	*H,L=220		95332-08030-	1	455	514
	8411-8510	BJ60	*H,L=260			1	515	554
C	8510-	HJ60	L=400		95332-08040-	1	567	
		77242B HOSE, FUEL, NO.2 (FOR MAIN TUBE, NO.2)						
	8008-	BJ60,HJ60	W/SEDIMENTER,*H,L=130		95332-08020-	1	455	
		77243 TUBE, FUEL MAIN, NO.3						
	8008-8307	BJ60	W/SEDIMENTER		77251-60210-	1	455	
	8305-8307	BJ60			77251-60200-	1	482	
	8307-8411	BJ60			77251-60201-	1		514
	8307-8411	BJ60	W/SEDIMENTER		77251-60211-	1		514
	8411-	BJ60,HJ60	W/SEDIMENTER		77251-60212-	1	515	
		77243A HOSE, FUEL, NO.1 (FOR MAIN TUBE, NO.3)						
	8301-8411	BJ60	*H,L=220		95332-08030-	1	482	514
	8411-8510	BJ60	*H,L=260			1	515	554
	8008-	BJ60,HJ60	W/SEDIMENTER,*H,L=130		95332-08020-	1	455	
	8008-	FJ60	*H,L=380		95332-08040-	1	455	
		77243B HOSE, FUEL, NO.2 (FOR MAIN TUBE, NO.3)						
	8008-	BJ60,HJ60,FJ60			77250-60050-	1	455	
		77254 TUBE, FUEL EMISSION, NO.1						
	8008-	FJ60**WGG			77262-60030-	1	455	
		77254A HOSE, FUEL, NO.1 (FOR EMISSION TUBE, NO.1)						
	8008-	FJ60**WGG	*H,L=360		95332-06040-	1	455	
		77255 TUBE, FUEL EMISSION, NO.2						
C	8604-	FJ60			77261-60070-	1	573	

* H, L = Cut hose to length as specified in remarks

FIG. 81-01 HEADLAMP

(8008-)

4-A1

GENUINE TOYOTA PARTS

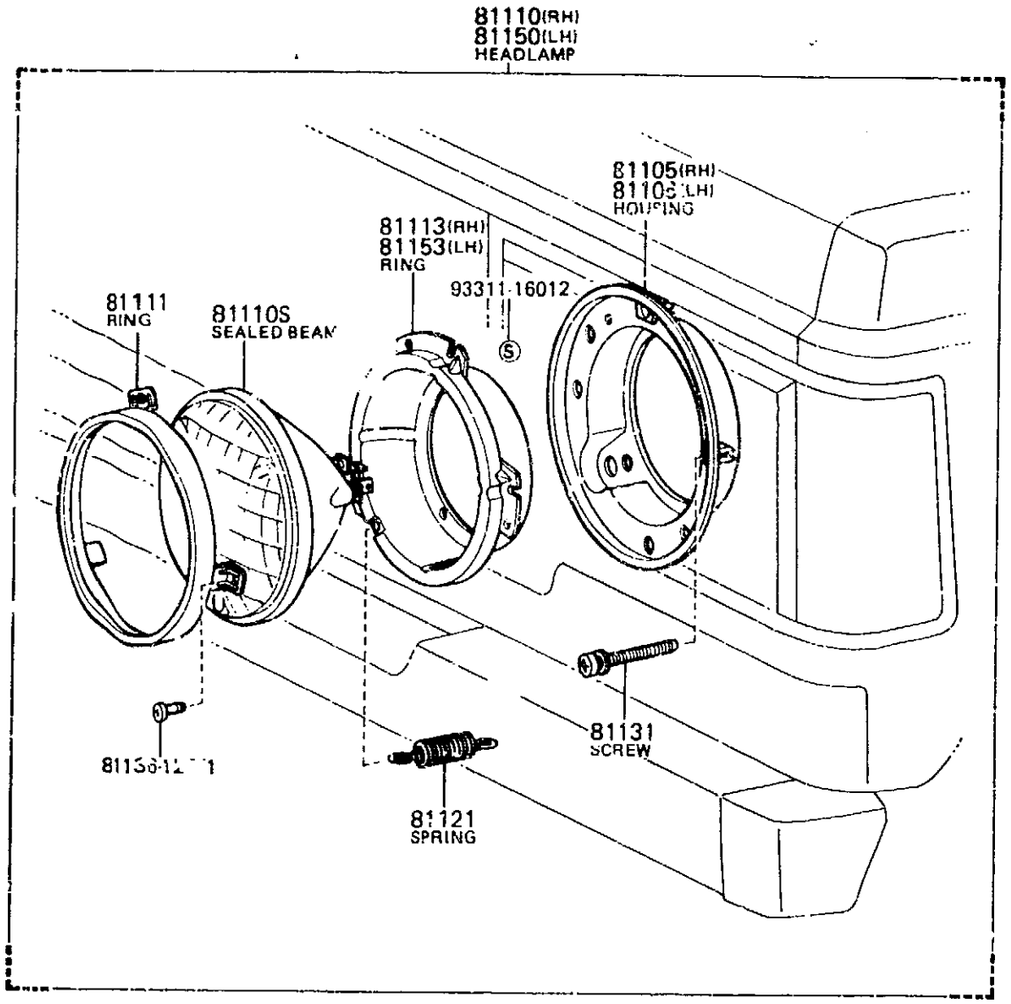

ME 8145-A

PROD.DATE	MODELS	DESCRIPTION	R/P	PART NUMBER	QTY	REV.REF.CODE FROM	REV.REF.CODE UP TO
FIG.	81-01 HEADLAMP						
	81105 HOUSING SUB-ASSY, HEADLAMP, RH						
8008-8210	BJ60,FJ60			81105-95A00-	1	455	466
8210-	BJ60,HJ60,FJ60			81105-90A02-	1	467	
	81106 HOUSING SUB-ASSY, HEADLAMP, LH						
8008-8210	BJ60,FJ60			81105-95A00-	1	455	466
8210-	BJ60,HJ60,FJ60			81105-90A02-	1	467	
	81110 HEADLAMP ASSY, RH						
8008-8109	BJ60,FJ60			81110-69035-	1	455	
8109-	BJ60,HJ60,FJ60			81110-69235-	1		
	81110S SEALED BEAM UNIT, NO.1						
8008-8109	BJ60,FJ60	12V 50/40W		90981-01016-	2	455	
8109-	BJ60,HJ60,FJ60	12V 60/50W		90981-01046-	2		
	81111 RING, SEALED BEAM RETAINING						
8008-	BJ60,HJ60,FJ60			81111-89117-	2	455	
	81113 RING, SEALED BEAM MOUNTING, NO.1 RH						
8008-8210	BJ60,FJ60			81153-95A00-	1	455	466
8210-	BJ60,HJ60,FJ60			81153-90A02-	1	467	
	81121 SPRING, HEADLAMP TENSION						
8008-	BJ60,HJ60,FJ60			81121-62010-	2	455	
	81131 SCREW, HEADLAMP ADJUSTING						
8008-8411	BJ60,FJ60			81131-10031-	4	455	514
8411-	BJ60,HJ60,FJ60			81119-1A270-	4	515	
	81150 HEADLAMP ASSY, LH						
8008-8109	BJ60,FJ60			81150-69035-	1	455	
8109-	BJ60,HJ60,FJ60			81150-69235-	1		
	81153 RING, SEALED BEAM MOUNTING, NO.1 LH						
8008-8210	BJ60,FJ60			81113-95A00-	1	455	466

PROD. DATE	MODELS	DESCRIPTION	R/P	PART NUMBER	QTY	REV. REF. CODE FROM	REV. REF. CODE UP TO
	81153 RING, SEALED BEAM MOUNTING, NO. 1 LH CONTINUED						
8210-	BJ60, HJ60, FJ60			81113-90A02-	1	467	

PROD. DATE	MODELS	DESCRIPTION	R/P	PART NUMBER	QTY	REV. REF. CODE FROM	REV. REF. CODE UP TO

MR4-13-0285

FIG. 81-03 FRONT TURN SIGNAL LAMP

(8008-)

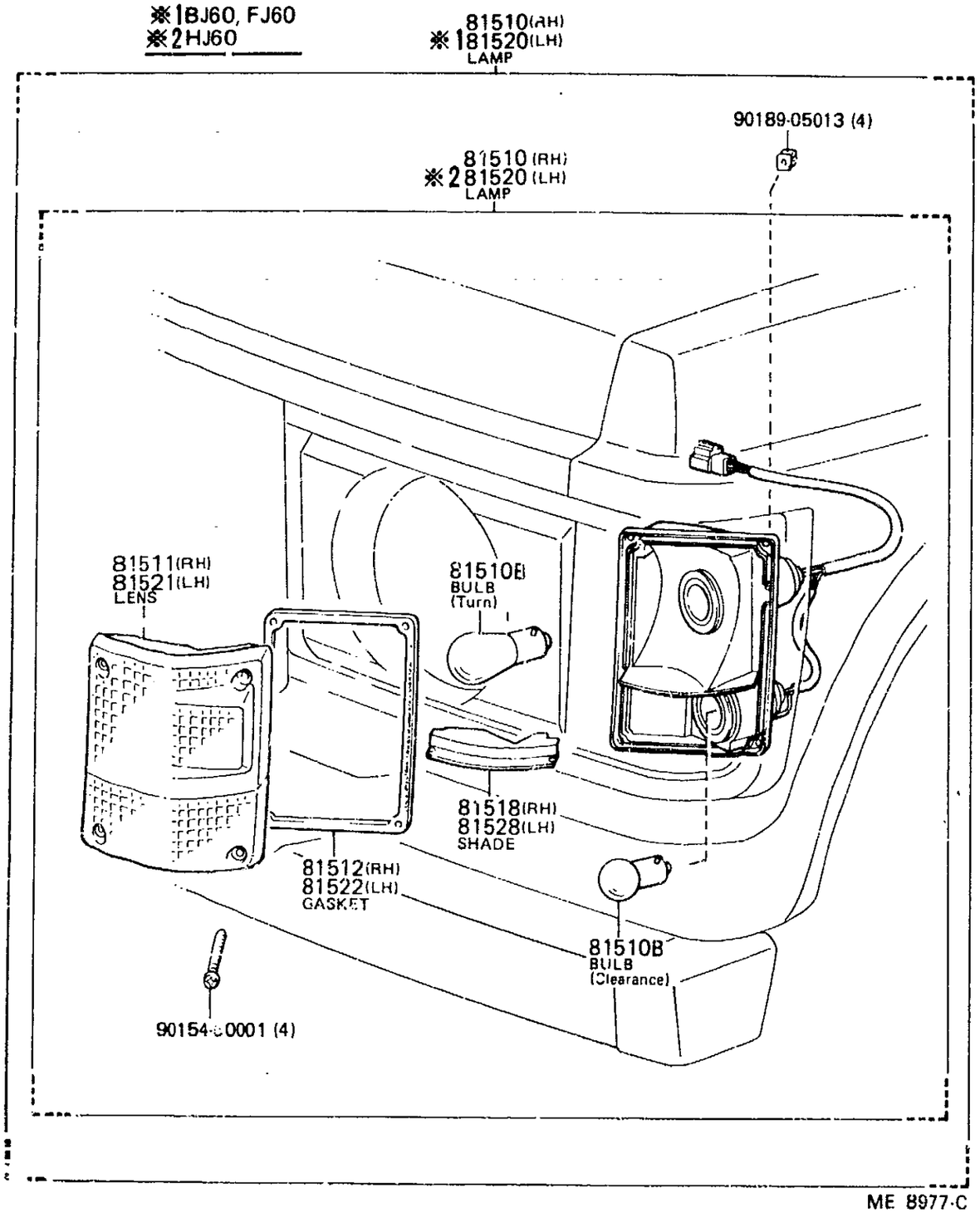

ME 8977-C

GENUINE TOYOTA PARTS

PROD.DATE	MODELS	DESCRIPTION	R/P	PART NUMBER	QTY	REV.REF.CODE. FROM	REV.REF.CODE. UP TO
FIG.	81-03 FRONT TURN SIGNAL LAMP						
	81510 LAMP ASSY, FRONT TURN SIGNAL, RH						
8008-	BJ60,FJ60	AMBER-CLEAR		81510-69155-	1	455	
8510-	HJ60	AMBER-CLEAR		81510-90A09-	1	567	
	81510B BULB (FOR FRONT TURN SIGNAL LAMP)						
8008-	BJ60,FJ60	12V 27W(TURN)		99132-11270-	2	455	
8008-	BJ60,FJ60	12V 8W(CLEARANCE)		99132-12080-	2	455	
8510-	HJ60	24V 21W(TURN)		90981-16014-	2	567	
8510-	HJ60	24V 5W(CLEARANCE)		90981-16016-	2	567	
	81511 LENS, FRONT TURN SIGNAL LAMP, RH						
8008-	BJ60,HJ60,FJ60	AMBER-CLEAR		81511-90A00-	1	455	
	81512 GASKET, FRONT TURN SIGNAL LAMP LENS, RH						
8008-	BJ60,HJ60,FJ60			81512-90A00-	1	455	
	81518 SHADE, FRONT TURN SIGNAL LAMP, RH						
8008-	BJ60,HJ60,FJ60			81517-90A00-	1	455	
	81520 LAMP ASSY, FRONT TURN SIGNAL, LH						
8008-	BJ60,FJ60	AMBER-CLEAR		81520-69155-	1	455	
8510-	HJ60	AMBER-CLEAR		81520-90A09-	1	567	
	81521 LENS, FRONT TURN SIGNAL LAMP, LH						
8008-	BJ60,HJ60,FJ60	AMBER-CLEAR		81521-90A00-	1	455	
	81522 GASKET, FRONT TURN SIGNAL LAMP LENS, LH						
8008-	BJ60,HJ60,FJ60			81512-90A00-	1	455	

PROD.DATE	MODELS	DESCRIPTION	R/P	PART NUMBER	QTY	REV.REF.CODE FROM	REV.REF.CODE UP TO
	81528	SHADE, FRONT TURN SIGNAL LAMP, LH					
8008-	BJ60,HJ60,FJ60			81527-90A00-	1	455	

PROD.DATE	MODELS	DESCRIPTION	R/P	PART NUMBER	QTY	REV.REF.CODE FROM	REV.REF.CODE UP TO

FIG.81-05 FRONT MARKER LAMP

4-E1

(8008-)

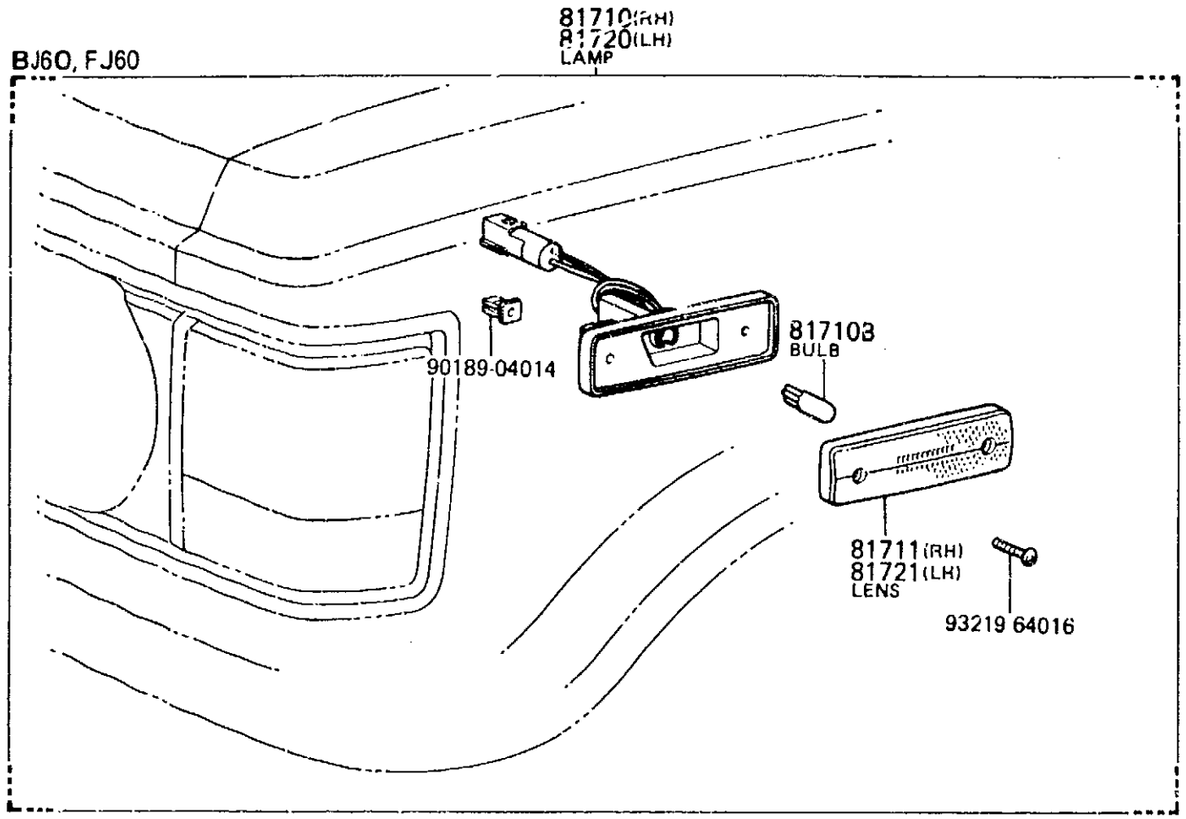

81710 (RH)

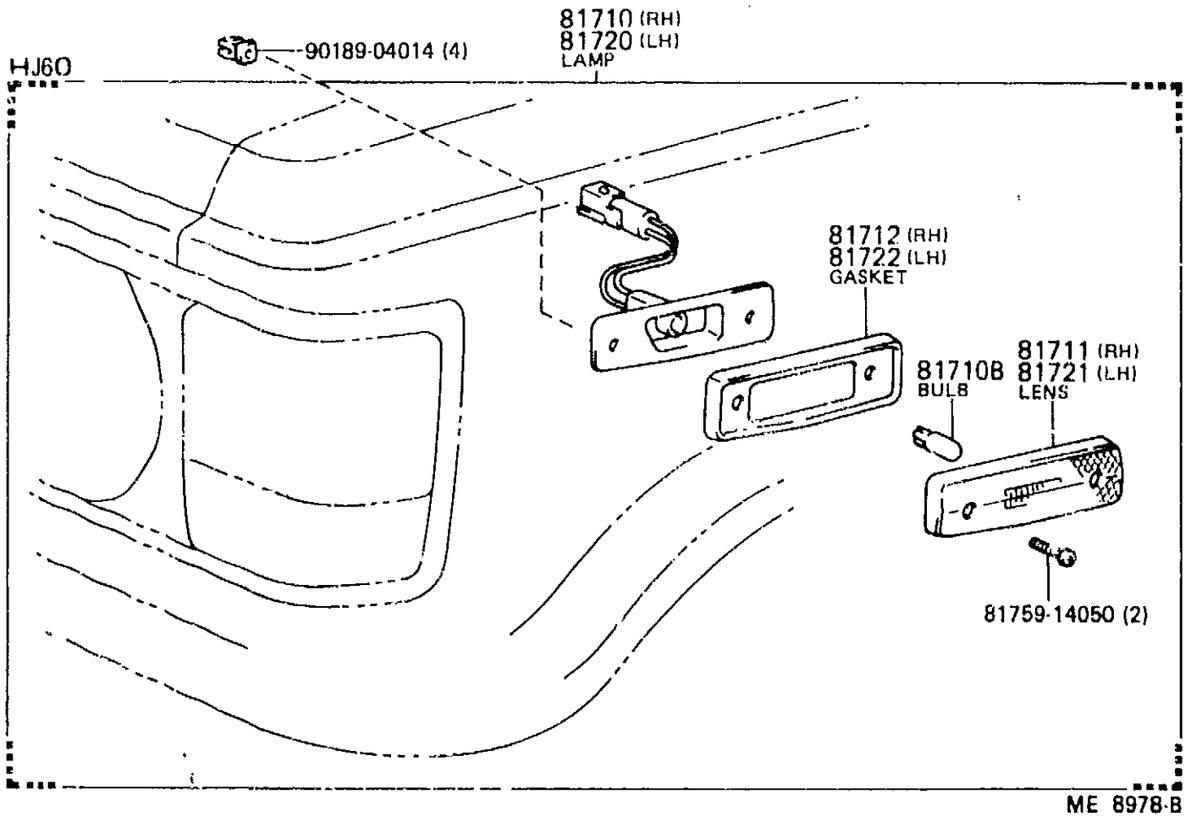

ME 8978-B

GENUINE TOYOTA PARTS

PROD.DATE	MODELS	DESCRIPTION	R/P	PART NUMBER	QTY	REV.REF.CODE FROM	REV.REF.CODE UP TO
FIG.	81-05 FRONT MARKER LAMP						
	81710 LAMP ASSY, FRONT MARKER, RH						
8008-	BJ60,FJ60			81730-19305-	1	455	
8510-	HJ60			81730-90A01-	1	567	
	81710B BULB, FRONT MARKER LAMP						
8008-	BJ60,FJ60	12V 3.8W		90981-11020-	2	455	
8510-	HJ60	24V 5W		90981-12015-	2	567	
	81711 LENS, FRONT MARKER LAMP, RH						
8008-	BJ60,HJ60,FJ60			81731-14110-	1	455	
	81712 GASKET, FRONT MARKER LAMP LENS, RH						
8510-	HJ60			81732-90A01-	1	567	
	81720 LAMP ASSY, FRONT MARKER, LH						
8008-	BJ60,FJ60			81740-19285-	1	455	
8510-	HJ60			81740-90A01-	1	567	
	81721 LENS, FRONT MARKER LAMP, LH						
8008-	BJ60,HJ60,FJ60			81741-14110-	1	455	
	81722 GASKET, FRONT MARKER LAMP LENS, LH						
8510-	HJ60			81742-90A01-	1	567	

(8008-)

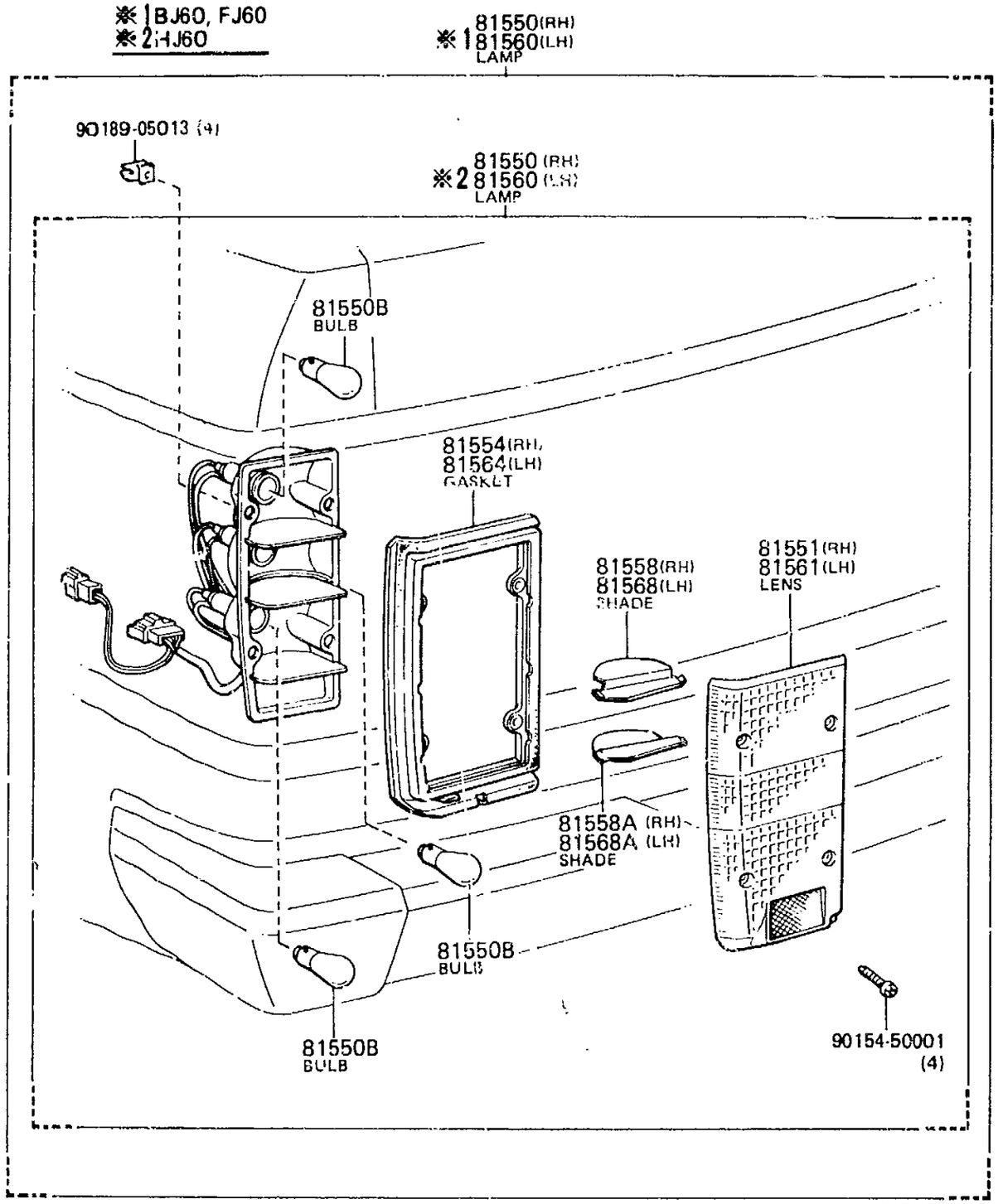

ME G730-A

GENUINE TOYOTA PARTS

PROD.DATE	MODELS	DESCRIPTION	R/P	PART NUMBER	QTY	REV.REF.CODE FROM	REV.REF.CODE UP TO
FIG.	81-11 REAR COMBINATION LAMP						
	81550 LAMP ASSY, REAR COMBINATION, RH						
8008-8411	BJ60,FJ60			81550-69055-	1	455	
8411-	BJ60,FJ60			81550-69195-	1		
8510-	HJ60			81550-90A10-	1	567	
	81550B BULB (FOR REAR COMBINATION LAMP)						
8008-	BJ60,FJ60	12V 27W(TURN OR BACK)		99132-11270-	4	455	
8008-	BJ60,FJ60	12V 27/8W(STOP/TAIL)		99132-21270-	2	455	
8510-	HJ60	24V 21W(TURN OR BACK)		90981-16014-	4	567	
8510-	HJ60	24V 21/5W(STOP/TAIL)		90981-16015-	2	567	
	81551 LENS, REAR COMBINATION LAMP, RH						
8008-	BJ60,FJ60			81551-90A00-	1	455	
8510-	HJ60			81551-90A10-	1	567	
	81554 GASKET, REAR COMBINATION LAMP BODY, RH						
8008-	BJ60,HJ60,FJ60			81552-90A00-	1	455	
	81558 SHADE, REAR COMBINATION LAMP, NO.1 RH						
8008-	BJ60,HJ60,FJ60			81557-90A00-	1	455	
	81558A SHADE, REAR COMBINATION LAMP, NO.2 RH						
8008-	BJ60,HJ60,FJ60			81558-90A00-	1	455	
	81560 LAMP ASSY, REAR COMBINATION, LH						
8008-8411	BJ60,FJ60			81560-69055-	1	455	
8411-	BJ60,FJ60			81560-69195-	1		
8510-	HJ60			81560-90A10-	1	567	
	81561 LENS, REAR COMBINATION LAMP, LH						
8008-	BJ60,FJ60			81561-90A00-	1	455	
8510-	HJ60			81561-90A10-	1	567	

GENUINE TOYOTA PARTS

PROD.DATE	MODELS	DESCRIPTION	R/P	PART NUMBER	QTY	REV.REF.CODE FROM	REV.REF.CODE UP TO
	81564 GASKET, REAR COMBINATION LAMP BODY, LH						
8008-	BJ60,HJ60,FJ60			81562-90A00-	1	455	
	81568 SHADE, REAR COMBINATION LAMP, NO.1 LH						
8008-	BJ60,HJ60,FJ60			81557-90A00-	1	455	
	81568A SHADE, REAR COMBINATION LAMP, NO.2 LH						
8008-	BJ60,HJ60,FJ60			81558-90A00-	1	455	

GENUINE TOYOTA PARTS

PROD.DATE	MODELS	DESCRIPTION	R/P	PART NUMBER	QTY	REV.REF.CODE FROM	REV.REF.CODE UP TO

FIG.81-13 REAR LICENSE PLATE LAMP

4-H1

GENUINE TOYOTA PARTS

(8008-)

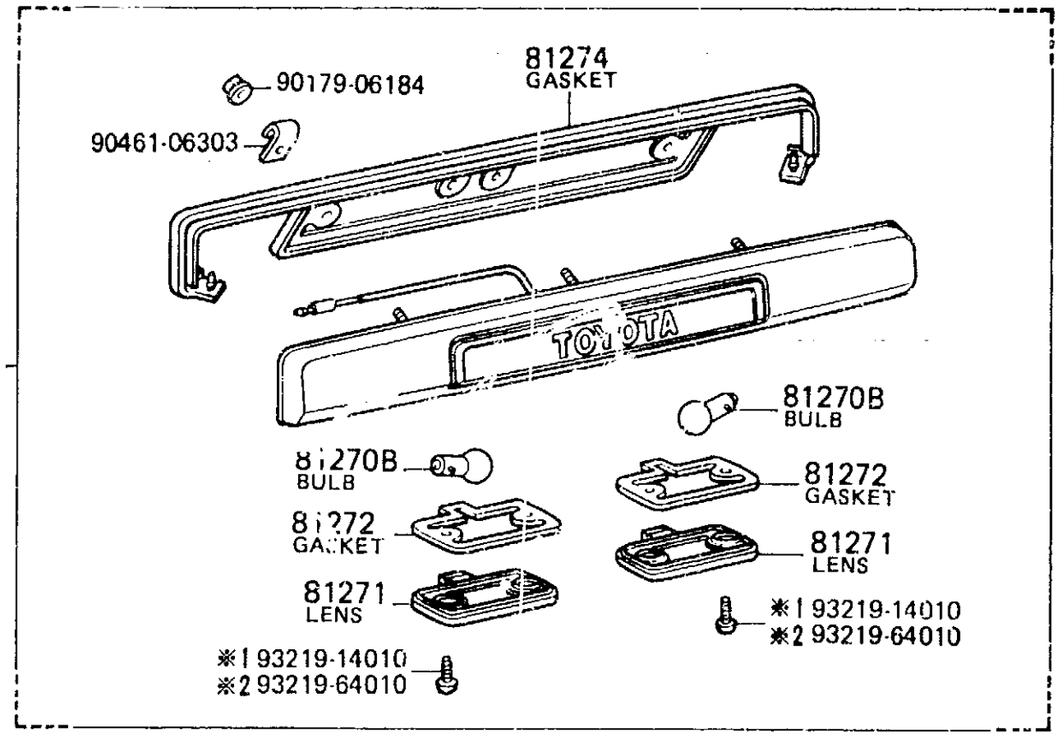

※1(8008-8110)
※2(8110-)

PROD.DATE	MODELS	DESCRIPTION	R/P	PART NUMBER	QTY	REV.REF.CODE FROM	REV.REF.CODE UP TO
FIG.	81-13 REAR LICENSE PLATE LAMP						
	81270 LAMP ASSY, LICENSE PLATE						
8008-8110	BJ60,FJ60			81270-29505-	1	455	458
8110-	BJ60,FJ60			81270-29645-	1	459	
8510-	HJ60			81270-29665-	1	567	
	81270B BULB (FOR LICENSE PLATE LAMP)						
8008-	BJ60,FJ60	12V 7.5W		99132-11075-	2	455	
8510-	HJ60	24V 5W		90981-16016-	2	567	
	81271 LENS, LICENSE PLATE LAMP						
8008-	BJ60,HJ60,FJ60			81271-13070-	2	455	
	81272 GASKET, LICENSE PLATE LAMP LENS						
8008-	BJ60,HJ60,FJ60			81272-13070-	2	455	
	81274 GASKET, LICENSE PLATE LAMP BODY						
8008-	BJ60,HJ60,FJ60			81274-95A00-	1	455	

(8008-)

BJ60, FJ60

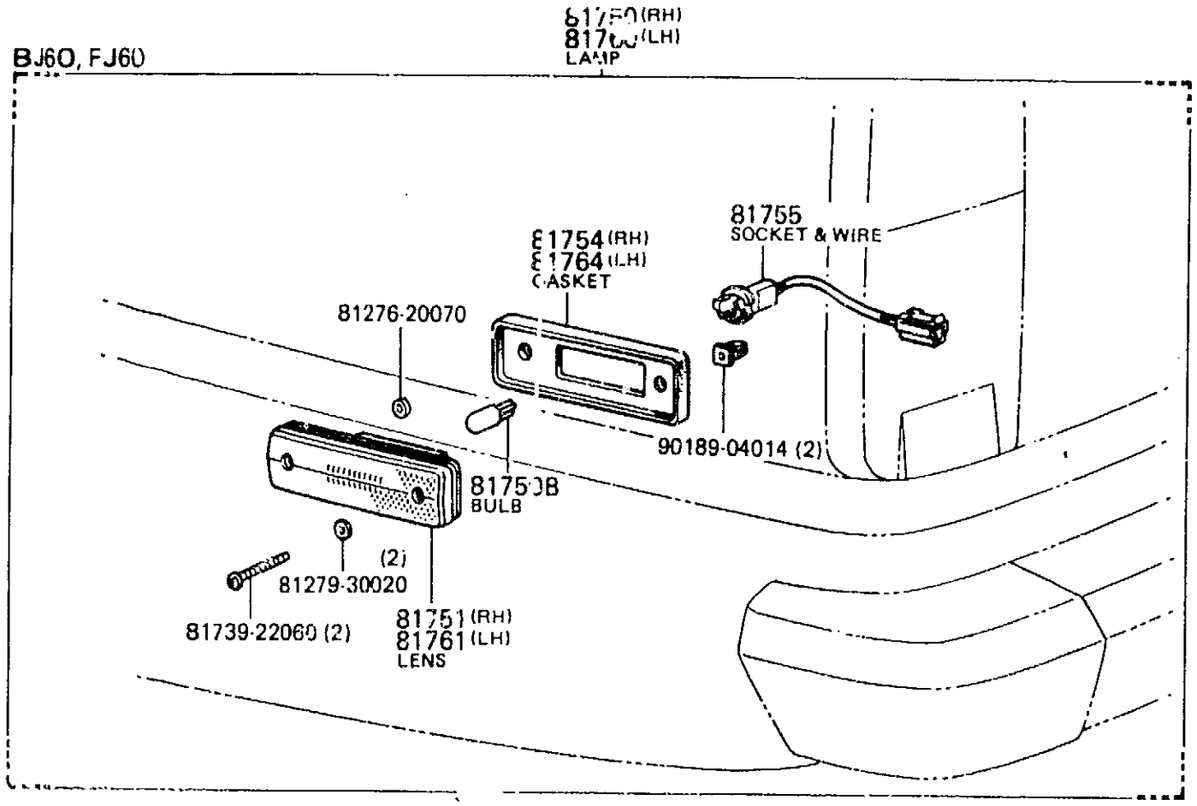

HJ60

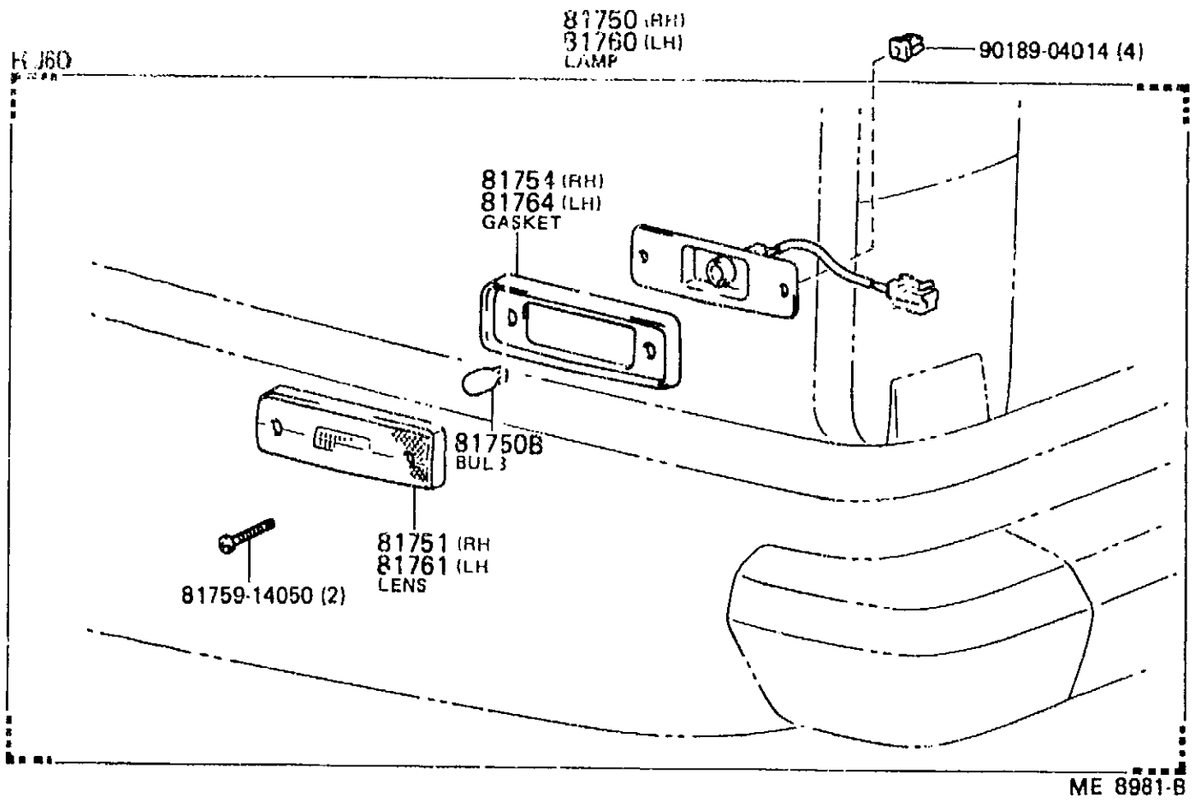

ME 8981-B

GENUINE TOYOTA PARTS

PROD.DATE	MODELS	DESCRIPTION	R/P	PART NUMBER	QTY	REV.REF.CODE FROM	REV.REF.CODE UP TO
FIG.	81-14 REAR SIDE MARKER LAMP						
	81750 LAMP ASSY, REAR SIDE MARKER, RH						
8008-	BJ60,FJ60			81750-29145-	1	455	
8510-	HJ60			81750-90A01-	1	567	
	81750B BULB, REAR SIDE MARKER LAMP						
8008-	BJ60,FJ60	12V 3.8W		90981-11020-	2	455	
8510-	HJ60	24V 5W		90981-12015-	2	567	
	81751 LENS, REAR SIDE MARKER LAMP, RH						
8008-	BJ60,FJ60			81751-14030-	1	455	
8510-	HJ60			81751-89107-	1	567	
	81754 GASKET, REAR SIDE MARKER LAMP BODY, RH						
8008-	BJ60,FJ60			81754-91255-	1	455	
8510-	HJ60			81732-90A01-	1	567	
	81755 SOCKET AND WIRE SUB-ASSY, REAR SIDE MARKER LAMP		P				
8008-	BJ60,FJ60			81755-20060-	1	455	
	81760 LAMP ASSY, REAR SIDE MARKER, LH						
8008-	BJ60,FJ60			81750-29145-	1	455	
8510-	HJ60			81760-90A00-	1	567	
	81761 LENS, REAR SIDE MARKER LAMP, LH						
8008-	BJ60,FJ60			81751-14030-	1	455	
8510-	HJ60			81761-89107-	1	567	
	81764 GASKET, REAR SIDE MARKER LAMP BODY, LH						
8008-	BJ60,FJ60			81754-91255-	1	455	
8510-	HJ60			81742-90A01-	1	567	

GENUINE TOYOTA PARTS

(8008-)

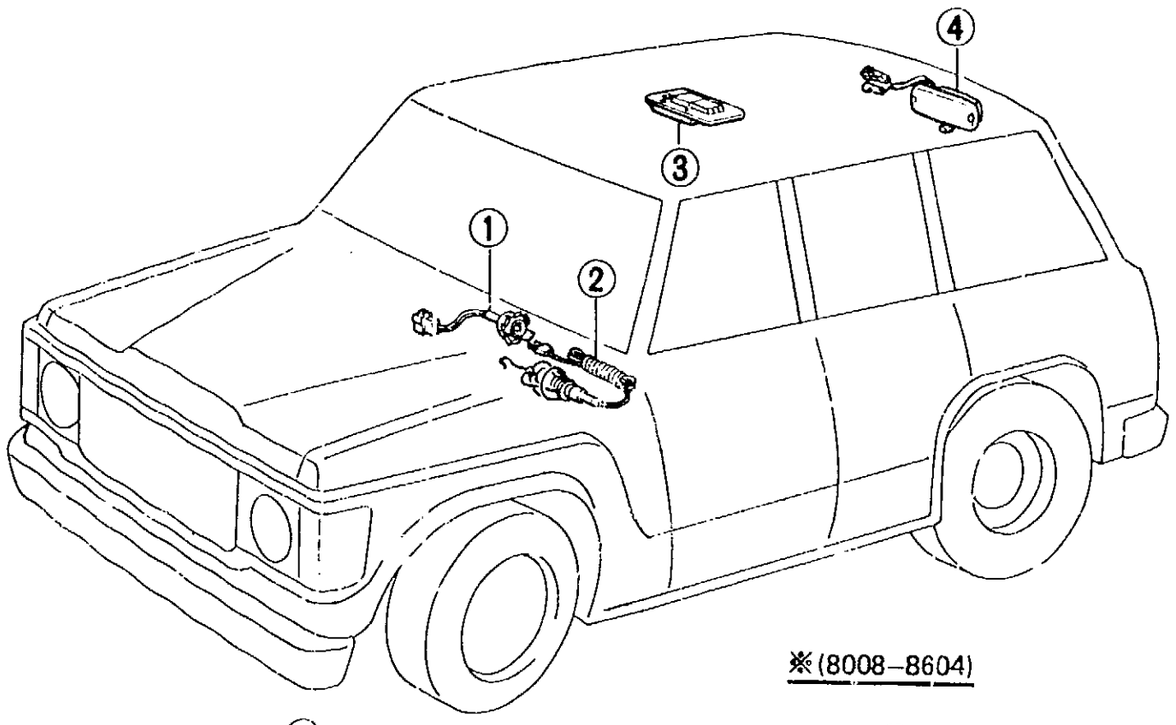

PROD.DATE	MODELS	DESCRIPTION	R/P	PART NUMBER	QTY	REV.REF.CODE FROM:	REV.REF.CODE UP TO
FIG.	81-21 INTERIOR LAMP						
	81240 LAMP ASSY, ROOM, NO.1						
8411-8504	BJ60	IVORY		81240-22070-08	1	515	554
8008-8411	BJ60,FJ60	IVORY		81240-20060-08	1	455	514
8504-	BJ60,FJ60	IVORY		81240-22070-08	1	555	
8411-8504	FJ60	IVORY		81240-20060-08	1	515	554
8510-	HJ60			81240-90K00-	1	567	
	81240B BULB, ROOM LAMP, NO.1						
8008-	BJ60,FJ60	12V 10W		99132-12100-	1	455	
8510-	HJ60	24V 10W		90981-16019-	1	567	
	81241 LENS, ROOM LAMP, NO.1						
8008-	BJ60,HJ60,FJ60			81241-20060-	1	455	
	81250 LAMP ASSY, ROOM, NO.2						
8411-8504	BJ60		#	81240-95A14- (81240-95A16-)	1	515	554
8008-8110	BJ60,FJ60			81240-95A03-	1	455	458
8110-8411	BJ60,FJ60			81240-95A16-	1	459	514
8504-	BJ60,FJ60		#	81240-95A14- (81240-95A16-)	1	555	
8411-8504	FJ60			81240-95A16-	1	515	554
8510-	HJ60		#	81240-95A15- (81240-95A17-)	1	567	
	81250B BULB, ROOM LAMP, NO.2						
8008-	BJ60,FJ60	12V 10W		90981-11004-	1	455	
8510-	HJ60	24V 10W		90981-16019-	1	567	
	81260 LAMP ASSY, GLOVE BOX						
8110-8510	BJ60			81260-22030-	1	459	566
8008-	FJ60..USA				1	455	
8510-	HJ60			81260-90A00-	1	567	
	81260B BULB (FOR GLOVE BOX)						
8110-8510	BJ60	12V 1.2W		90981-11018-	1	459	566

PROD.DATE	MODELS	DESCRIPTION	R/P	PART NUMBER	QTY	REV.REF.CODE FROM	REV.REF.CODE UP TO
	81260B BULB (FOR GLOVE BOX) CONTINUED						
8008-	FJ60••USA	12V 1.2W		90981-11018-	1	455	
8510-	HJ60	24V 1.4W		90981-11022-	1	567	
	81370 LAMP ASSY, INSPECTION						
8006-8604	BJ60,FJ60			81370-60010-	1	455	572
	81370E BULB, INSPECTION LAMP						
8008-8604	BJ60,FJ60	12V 23W		99132-11230-	1	455	572

FIG.82-01 BATTERY & BATTERY CABLE

4-L1

GENUINE TOYOTA PARTS

(8008-)

FJ

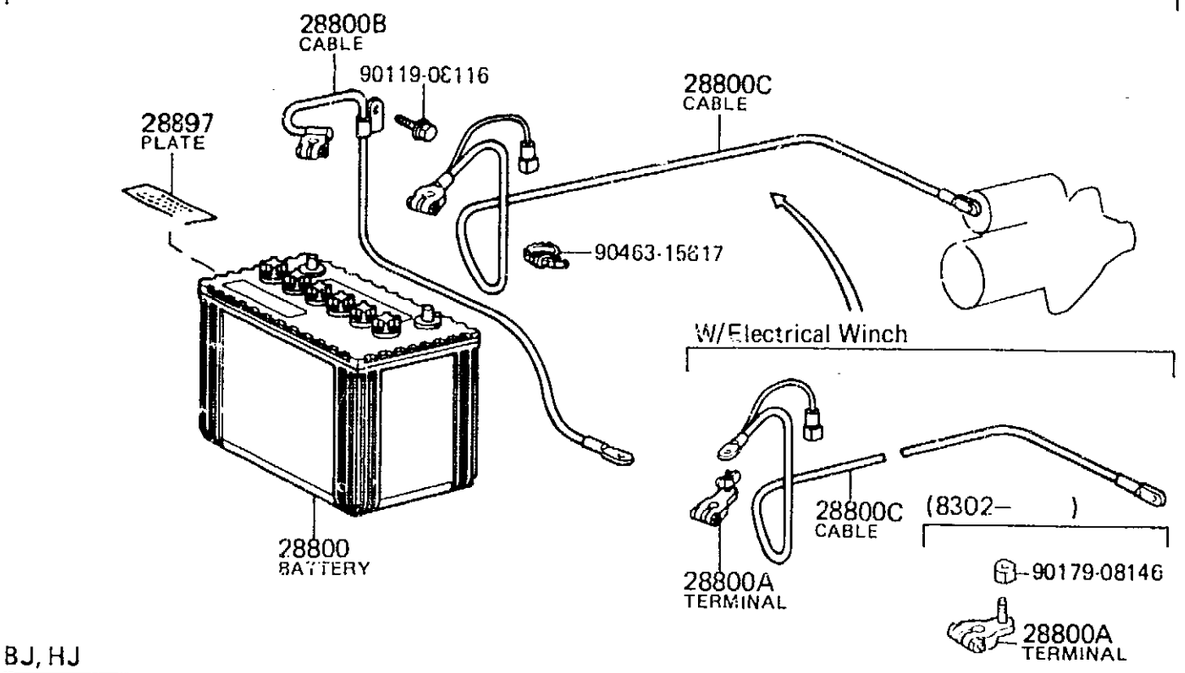

BJ, HJ

※ (-8302)
※1(-8510)
※2(8510-)

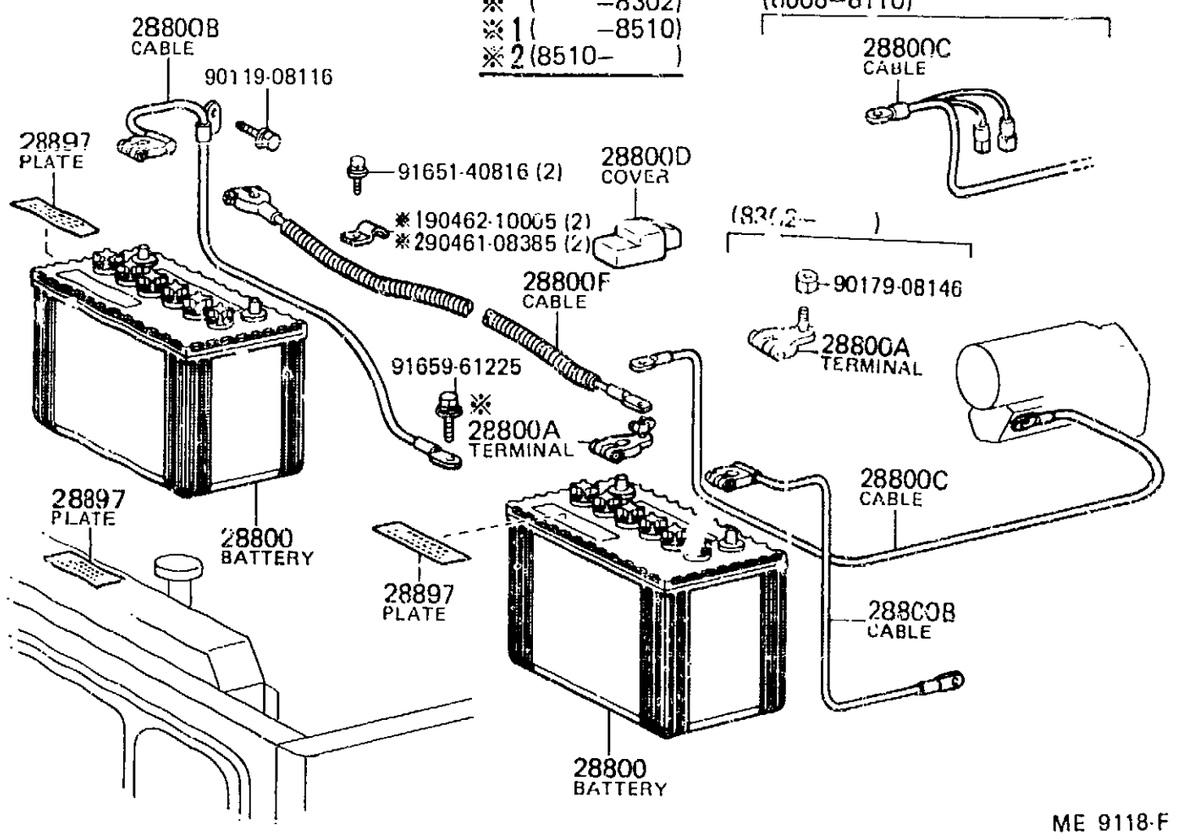

ME 9118-F

PROD.DATE	MODELS	DESCRIPTION	R/P	PART NUMBER	QTY	REV.REF.CODE FROM	REV.REF.CODE UP TO
FIG.	82-01 BATTERY & BATTERY CABLE						
	28800 BATTERY						
8008-8110	2F••FJ60••CND	75D31R(N70Z)		28800-46012-	1	455	458
8008-8502	2F••FJ60••USA	75D31R-MF(N70Z-MF)		28800-61010-	1	455	
8008-8411	3B••BJ60	75D31L-MF(N70ZL-MF)		28800-45050-	1	455	514
8008-8411	3B••BJ60	75D31R-MF(N70Z-MF)		28800-61030-	1	455	514
8411-8502	3B••BJ60	75D31L-MF(N70ZL-MF)		28800-45050-	1	515	
8411-8502	3B••BJ60	75D31R-MF(N70Z-MF)		28800-61010-	1	515	
8502-	3B,2H••BJ60,HJ60	75D31L-MF(N70ZL-MF)		28800-45050-	1		
8502-	3B,2H,2F••BJ60,HJ60,FJ60	75D31R-MF(N70Z-MF)		28800-61030-	1		
	28800A TERMINAL, BATTERY POSITIVE						
8008-8302	3B,2F••BJ60,FJ60			99142-87175-	1	455	
8302-	3B,2H,2F••BJ60,HJ60,FJ60			90982-05005-	1		
	28800B CABLE, BATTERY TO GROUND						
8008-	2H,2F••FJ60,HJ60			90982-02207-	1	455	
8008-8510	3B••BJ60				2	455	566
	28300C CABLE, BATTERY TO STARTER (FOR BATTERY TO MAIN SWITCH)						
8008-8604	2F••FJ60	L=1600 W/WINCH		90982-01354-	1	455	572
8008-	2F••FJ60	L=1600		90982-01351-	1	455	
8008-8110	3B••BJ60	L=1600		90982-01353-	1	455	458
8110-	3B,2H••BJ60,HJ60	L=1600		90982-01414-	1	459	
	28800D COVER, CONNECTOR (FOR BATTERY TERMINAL)						
8110-	3B,2H••BJ60,HJ60			82821-12150-	1	459	
	28800F CABLE, BATTERY TO BATTERY						
8510-	2H••HJ60			82122-90A00-	1	567	

PROD.DATE	MODELS	DESCRIPTION	R/P	PART NUMBER	QTY	REV.REF.CODE FROM	REV.REF.CODE UP TO
	28800F CABLE, BATTERY TO BATTERY CONTINUED						
8008-8510	3B••BJ60			90982-03020-	1	455	566
	28897 PLATE, BATTERY CAUTION						
8504-	2F••FJ60	BATTERY		28898-26010--	1	555	
8008-8110	2F••FJ60 ..ND	BATTERY		28897-38010-	1	455	458
8510-	2H••HJ60	BATTERY			2	567	
8009-8012	3B••BJ60	RADIATOR UPPER SUPPORT		28897-54030-	1		
8008-8502	3B••BJ60	BATTERY		28897-45040-	2	455	
8012-8510	3B••BJ60	RADIATOR UPPER SUPPORT		28897-54020-	1		566
8502-8510	3B••BJ60	BATTERY		28897-38010-	2		566

PROD.DATE	MODELS	DESCRIPTION	R/P	PART NUMBER	QTY	REV.REF.CODE FROM	REV.REF.CODE UP TO

(8008--)

ILLUST.NO. 1OF3

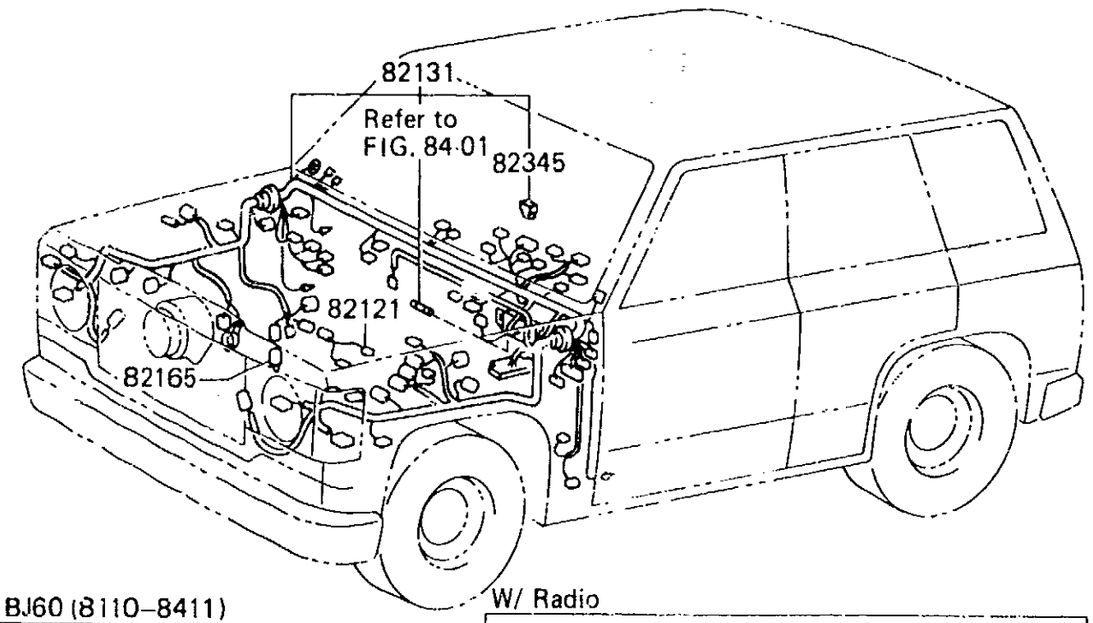

BJ60 (8110-8411)

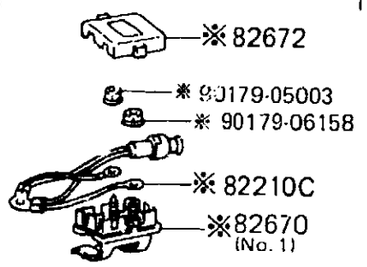

W/ Radio

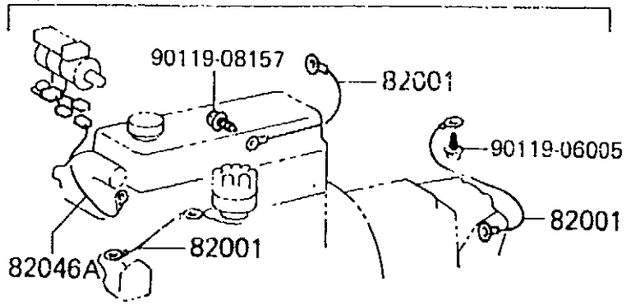

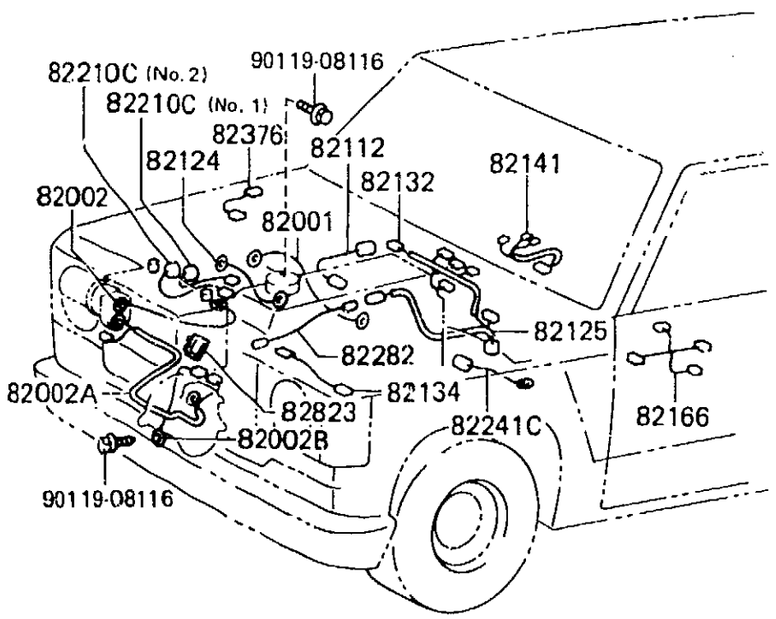

※ Included in 82131

(8510-) HJ60

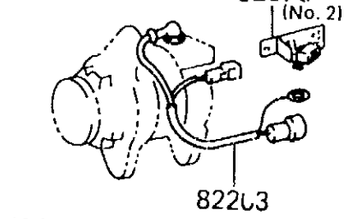

(8411-) BJ60, HJ60

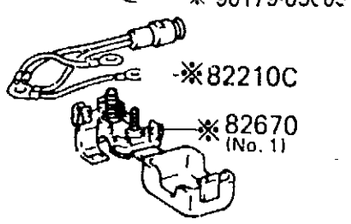

ME 8986-K

(8008-)

ILLUST.NO. 2OF3

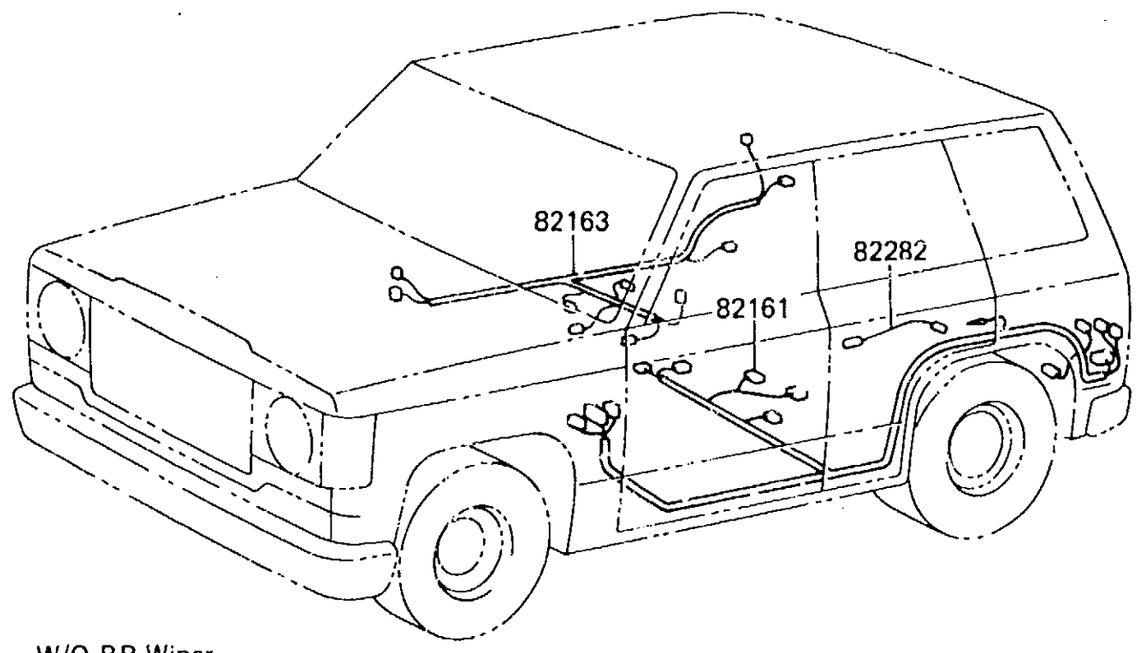

W/O RR Wiper

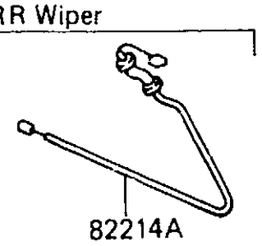

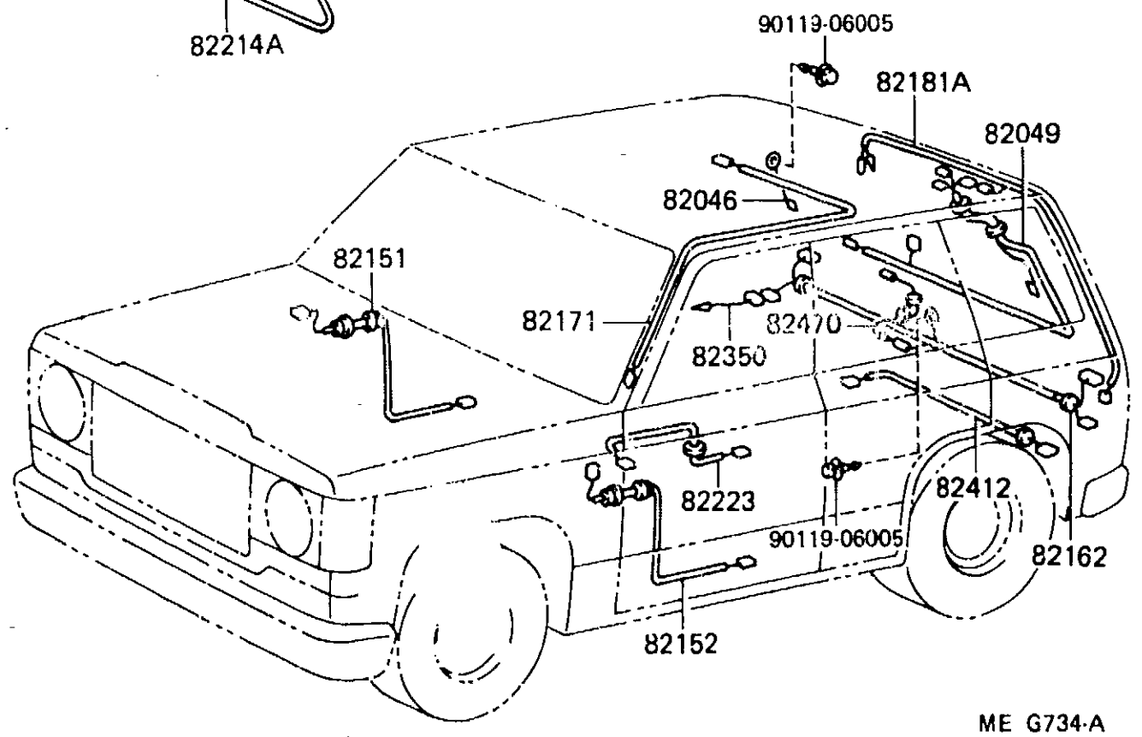

ME G734-A

(8008-)

ILLUST.NO. 3OF3

NO.	1	2	3	4	5
TYPE	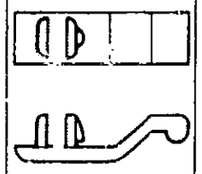		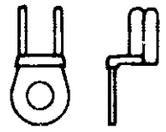	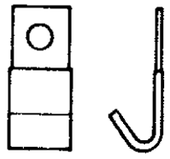	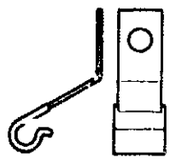
PART NO.	82711-12480	82711-14080	90461-08359	90461-06671	90461-08116

NO.	6	7	8	9	10
TYPE	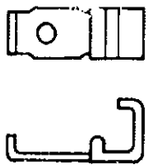	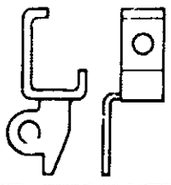	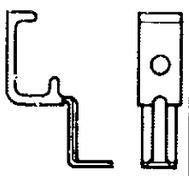	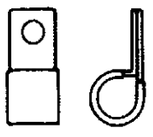	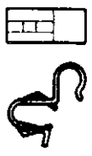
PART NO.	90461-08202	90461-08265	90461-08401	90461-08385	90463-04079

NO.	11	12	13	14	15
TYPE	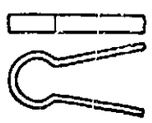	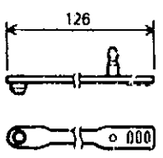	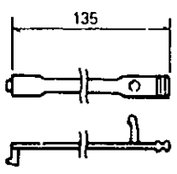	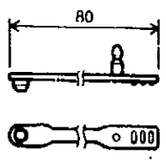	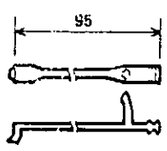
PART NO.	90463-08207	90463-10010	90463-10060	90463-10338	90463-10521

NO.	16	17	18	19	20
TYPE	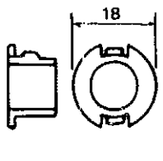	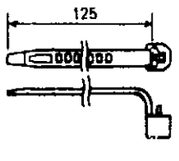	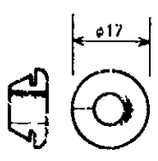	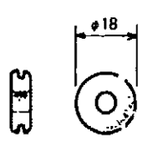	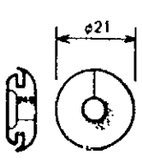
PART NO.	82819-90A02	82711-12200	90480-12002	90480-13334	90480-30007

NO.	21	22	23	24	25
TYPE	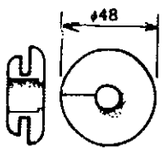	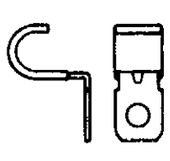	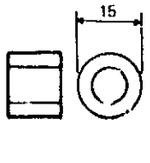	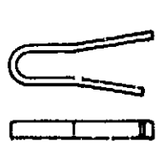	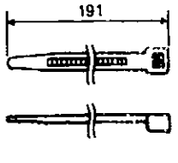
PART NO.	90480-36508	90461-08206	90560-08011	90463-08375	82711-22270

ME 8987-B

ILLUST.NO. 3OF3

NO.	26	27	28	29	30
TYPE	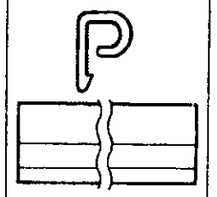	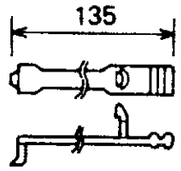		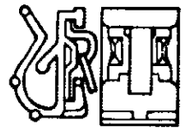	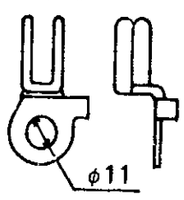
PART NO.	90947-03003	90463-10060	90462-08015	90464-00167	90461-06086

NO.	31	32	33	34	35
TYPE	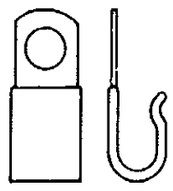	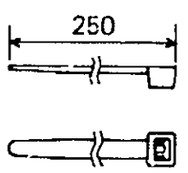	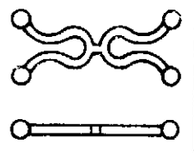	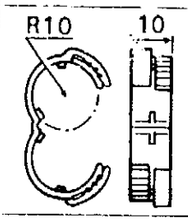	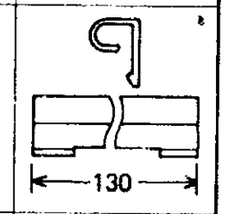
PART NO.	90461-08430	90463-15003	90464-00056	82711-14110	82711-14290

NO.	36	37	38	39	40
TYPE	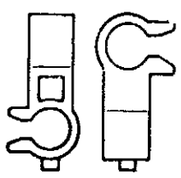	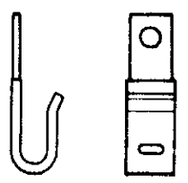	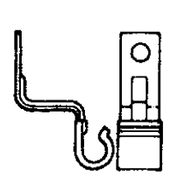	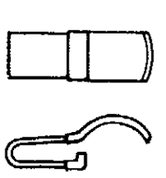	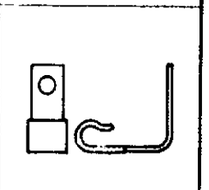
PART NO.	90464-00154	90461-10311	90462-10047	90463-08030	90461-06012

NO.	41	42	43	44	45
TYPE	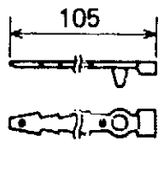	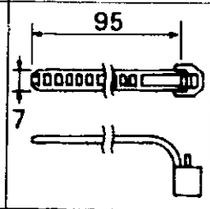	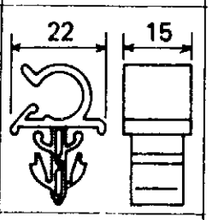	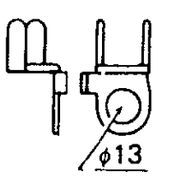	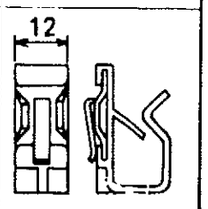
PART NO.	90463-15346	82711-30360	82711-90K04	90461-06645	90464-00030

NO.	46	47			
TYPE	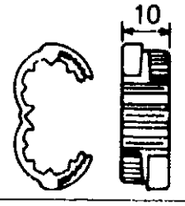	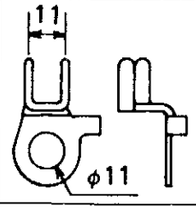			
PART NO.	82711-12120	82711-60010			

ME A540-I

FIG.82-02 **GENUINE TOYOTA PARTS** **4-C2** **GENUINE TOYOTA PARTS**

PROD.DATE	MODELS	DESCRIPTION	R/P	PART NUMBER	QTY	REV.REF.CODE FROM	REV.REF.CODE UP TO
FIG.	82-02 WIRING & CLAMP						
	82001 CABLE, BOND, NO.1						
8008-8510	BJ60			90980-07056-	1	455	566
8008-8109	FJ60	DIST-ENGINE,W/RADIO		90980-07192-	1	455	
8008-8504	FJ60	MITTION-BODY,W/RADIO		90980-07193-	1	455	554
8008-8504	FJ60	E/G-HEATER VALVE,W/RADIO		90980-07194-	1	455	554
8504-	FJ60	MITTION-BODY,W/RADIO		90980-07048-	1	555	
8504-	FJ60	E/G-HEATER VALVE,W/RADIO		90980-07251-	1	555	
8008-	HJ60,FJ60			90980-07003-	1	455	
	82002 CABLE, BATTERY TO MAGNET SWITCH						
8411-8504	BJ60			82275-90A00-	1	515	554
8008-8411	BJ60,FJ60			38655-90A00-	1	455	514
8504-8604	BJ60,FJ60			82275-90A00-	1	555	572
8411-8504	FJ60			38655-90A00-	1	515	554
	82002A CABLE, MAGNET SWITCH TO WINCH						
8008-8411	BJ60			38656-90A01-	1	455	514
8411-8510	BJ60			82276-90A01-	1	515	566
8008-8504	FJ60			38656-90A00-	1	455	554
8504-8604	FJ60			82276-90A00-	1	555	572
	82002B CABLE, WINCH TO GROUND						
8008-8604	BJ60,FJ60			90980-07175-	1	455	572
	82046 WIRE SUB-ASSY, REAR WINDOW DEFOGGER EARTH						
8411-8504	BJ60			82187-90A00-	1	515	554
8008-8411	BJ60,FJ60	W/*RW		82046-90A00-	1	455	514
8504-	BJ60,HJ60,FJ60			82187-90A00-	1	555	
8411-8504	FJ60	W/*RW		82046-90A00-	1	515	554

PROD.DATE	MODELS	DESCRIPTION	R/P	PART NUMBER	QTY	REV.REF.CODE FROM	REV.REF.CODE UP TO
	82046A WIRE SUB-ASSY, BODY GROUND						
8008-8604	FJ60	IGNITION COIL,W/RADIO		82046-90A01-	1	455	572
	82049 WIRING SUB-ASSY, REAR WIPER						
8411-8504	BJ60			82184-90A03-	1	515	554
8008-8411	BJ60,FJ60			82049-90A00-	1	455	514
8504-	BJ60,FJ60			82184-90A03-	1	555	
8411-8504	FJ60			82049-90A00-	1	515	554
8510-	HJ60			82184-90A04-	1	567	
	82112 WIRE, ENGINE ROOM, NO.2						
8510-	HJ60..ATM			82112-90A02-	1	567	
	82121 WIRE, ENGINE						
8510-	HJ60			82121-90A02-	1	567	
	82124 WIRE, ENGINE, NO.4						
8504-	FJ60			82124-90A01-	1	555	
8510-	HJ60			82124-90A00-	1	567	
	82125 WIRE, TRANSMISSION						
8008-8210	BJ60			82310-90A02-	1	455	466
8210-8301	BJ60			82310-90A06-	1	467	488
8301-8411	BJ60			82310-90A10-	1	489	514
8411-	BJ60			82125-90A05-	1	515	
8008-8210	FJ60			82310-90A00-	1	455	466
8210-8301	FJ60			82310-90A05-	1	467	488
8301-8504	FJ60			82310-90A09-	1	489	554
8504-	FJ60			82125-90A06-	1	555	
8510-	HJ60..ATM			82125-90A08-	1	567	
8510-	HJ60..MTM			82125-90A07-	1	567	
	82131 WIRE, COWL						
8008-8110	BJ60			82210-90A05-	1	455	458

*RW = Rear Wiper

	PROD.DATE	MODELS	DESCRIPTION	R/P	PART NUMBER	QTY	REV.REF.CODE FROM	REV.REF.CODE UP TO
		82131 WIRE, COWL CONTINUED						
	8110-8210	BJ60			82210-90A48-	1	459	466
	8210-8309	BJ60			82210-90A76-	1	467	486
	8309-8411	BJ60			82210-90A98-	1	487	514
	8411-8510	BJ60			82131-90A27-	1	515	566
	8210-8309	FJ60	W/IC REGULATOR		82210-90A68-	1	467	486
	8210-8309	FJ60	STD TYPE REGULATOR		82210-90A69-	1	467	486
	8309-8504	FJ60	W/IC REGULATOR		82210-90A94-	1	487	554
	8309-8504	FJ60	STD TYPE REGULATOR		82210-90A95-	1	487	554
	8504-8604	FJ60	W/IC REGULATOR		82131-90A29-	1	555	572
	8504-8604	FJ60	STD TYPE REGULATOR		82131-90A30-	1	555	572
	8604-	FJ60	W/IC REGULATOR		82131-90A99-	1	573	
	8008-8110	FJ60,,CND			82210-90A04-	1	455	458
	8008-8110	FJ60,,USA	W/IC REGULATOR		82210-90A00-	1	455	458
	8008-8110	FJ60,,USA	STD TYPE REGULATOR		82210-90A10-	1	455	458
	8110-8210	FJ60,,USA	W/IC REGULATOR		82210-90A38-	1	459	466
	8110-8210	FJ60,,USA	STD TYPE REGULATOR		82210-90A39-	1	459	466
C	8510-8608	HJ60			82131-90A79-	1	567	600
C	8608-	HJ60			82131-90G30-	1	601	
		82132 WIRE, COWL, NO.2						
	8008-8110	BJ60,FJ60			82028-90A01-	1	455	458
	8008-8110	BJ60,FJ60	W/*REH,*RW OR *MDA		82028-90A03-	1	455	458
	8110-8411	BJ60,FJ60			82028-90A07-	1	459	514
	8110-8411	BJ60,FJ60	W/*REH,*RW OR *MDA		82028-90A09-	1	459	514
	8411-	BJ60,HJ60			82132-90A05-	1	515	

	PROD.DATE	MODELS	DESCRIPTION	R/P	PART NUMBER	QTY	REV.REF.CODE FROM	REV.REF.CODE UP TO
		82132 WIRE, COWL, NO.2 CONTINUED						
	8411-8504	FJ60			82028-90A07-	1	515	554
	8504-	FJ60			82132-90A08-	1	555	
		82134 WIRE, COWL, NO.4						
	8510-	HJ60			82134-90A03-	1	567	
		82141 WIRE, INSTRUMENT PANEL						
	8008-8210	BJ60			82232-90A00-	1	455	466
	8411-8504	BJ60			82141-90A01-	1	515	554
	8210-8411	BJ60,FJ60			82232-90A08-	1	467	514
	8504-	BJ60,FJ60			82141-90A01-	1	555	
	8008-8210	FJ60			82232-90A01-	1	455	466
	8411-8504	FJ60			82232-90A08-	1	515	554
C	8510-8608	HJ60			82141-90A06-	1	567	600
C	8608-	HJ60	W/DIFF LOCK		82141-90A14-	1	601	
		82151 WIRE, FRONT DOOR, RH						
	8008-8309	BJ60	*19 OR TAPE PLAYER		82372-90A00-	1	455	486
	8411-8504	BJ60			82151-90A01-	1	515	554
	8309-8411	BJ60,FJ60	*19 OR TAPE PLAYER		82372-90A00-	1	487	514
	8504-8604	BJ60,FJ60			82151-90A01-	1	555	572
	8411-8504	FJ60	*19 OR TAPE PLAYER		82372-90A00-	1	515	554
	8604-	FJ60			82151-90A05-	1	573	
	8008-8309	FJ60,,USA	*19 OR TAPE PLAYER		82372-90A00-	1	455	486
	8510-	HJ60			82151-90A05-	1	567	
		82152 WIRE, FRONT DOOR, LH						
	8008-8309	BJ60	*19 OR TAPE PLAYER		82372-90A00-	1	455	486
	8411-8504	BJ60			82151-90A01-	1	515	554
	8309-8411	BJ60,FJ60	*19 OR TAPE PLAYER		82372-90A00-	1	487	514

* REH = Rear Heater
* RW = Rear Wiper
* MDA=Motor Drive Antenna
* 19=AM/FM Multiplex (2 Speakers)

FIG.82-02 **GENUINE TOYOTA PARTS** 4-E2 **GENUINE TOYOTA PARTS**

PROD.DATE	MODELS	DESCRIPTION	R/P	PART NUMBER	QTY	REV.REF.CODE FROM	REV.REF.CODE UP TO
	82152 WIRE, FRONT DOOR, LH CONTINUED						
8504-8604	BJ60,FJ60			82151-90A01-	1	555	572
8411-8504	FJ60	*19 OR TAPE PLAYER		82372-90A00-	1	515	554
8604-	FJ60			82151-90A05--	1	573	
8008-8309	FJ60..USA	*19 OR TAPE PLAYER		82372-90A00-	1	455	486
8510-	HJ60			82151-90A05-	1	567	
	82161 WIRE, FLOOR						
8008-8210	BJ60	W/*RW		82420-90A08-	1	455	466
8008-8309	BJ60			82420-90A01-	1	455	486
8210-8309	BJ60	W/*RW		82420-90A18-	1	467	486
8309-8411	BJ60	W/*RW		82420-90A25-	1	487	514
8309-8411	BJ60			82420-90A26-	1	487	514
8411-8510	BJ60			82161-90A01-	1	515	566
8008-8210	FJ60	W/*RW		82420-90A04-	1	455	466
8008-8504	FJ60			82420-90A02-	1	455	554
8210-8504	FJ60	W/*RW		82420-90A15-	1	467	554
8504-8604	FJ60			82161-90A17-	1	555	572
8604-	FJ60			82161-90A19-	1	573	
8604-	FJ60	W/*RWD		82161-90A20-	1	573	
8510-	HJ60			82161-90A19-	1	567	
8510-	HJ60	W/*RWD		82161-90A20-	1	567	
	82162 WIRE, FLOOR, NO.2						
8411-8504	BJ60			82162-90A00-	1	515	554
8008-8110	BJ60,FJ60			82410-90A00-	1	455	458
8110-8411	BJ60,FJ60			82410-90A07-	1	459	514
8504-8509	BJ60,FJ60			82162-90A00-	1	555	
8509-8604	BJ60,FJ60			82162-90A21-	1		572
8411-8504	FJ60			82410-90A07-	1	515	554
8604-	FJ60			82162-90A12-	1	573	
8510-	HJ60				1	567	

PROD.DATE	MODELS	DESCRIPTION	R/P	PART NUMBER	QTY	REV.REF.CODE FROM	REV.REF.CODE UP TO
	82163 WIRE, FLOOR, NO.3						
8604-	FJ60			82163-90A13-	1	573	
8510-	HJ60..ATM			82163-90A10-	1	567	
8510-	HJ60..MTM			82163-90A03-	1	567	
	82165 WIRE, FRAME, NO.2						
8510-	HJ60..MTM			82165-90A00-	1	567	
	82166 WIRE, CONSOLE BOX						
8510-	HJ60			82166-90A00-	1	567	
	82171 WIRE, ROOF, NO.1						
8411-8504	BJ60			82171-90A00-	1	515	554
8008-8210	BJ60,FJ60			82520-90A00-	1	455	466
8210-8411	BJ60,FJ60			82520-90A01-	1	467	514
8504-	BJ60,HJ60,FJ60			82171-90A05-	1	555	
8411-8504	FJ60			82520-90A01--	1	515	554
8510-	HJ60	W/THERMOMETER		82171-90A08-	1	567	
	82181A WIRE, LUGGAGE ROOM, NO.2						
8411-8504	BJ60			82182-90A00-	1	515	554
8411-8504	BJ60	W/*RWD		82182-90A01-	1	515	554
8008-8110	BJ60,FJ60	W/*RW		82048-90A00-	1	455	458
8008-8110	BJ60,FJ60			82048-90A01-	1	455	458
8110-8411	BJ60,FJ60	W/*RW		82048-90A02-	1	459	514
8110-8411	BJ60,FJ60			82048-90A03-	1	459	514
8504-8604	BJ60,FJ60	W/*RWD		82182-90A01-	1	555	572
8504-	BJ60,HJ60,FJ60			82182-90A00-	1	555	
8411-8504	FJ60	W/*RW		82048-90A02-	1	515	554
8411-8504	FJ60			82048-90A03-	1	515	554
8604-	FJ60	W/*RWD		82182-90A02-	1	573	
8510-	HJ60	W/*RWD			1	567	

* 19=AM/FM Multiplex (2 Speakers)
* RW = Rear Wiper
* RWD = Rear Window Defogger

	PROD.DATE	MODELS	DESCRIPTION	R/P	PART NUMBER	QTY	REV.REF.CODE FROM	REV.REF.CODE UP TO
		82203 WIRE SUB-ASSY, ALTERNATOR						
	8510-	HJ60			82114-90K05-	1	567	
		82210C FUSIBLE LINK						
	8008-8110	BJ60	NO.2,GLOW		90982-08137-	1	455	458
	8008-8110	BJ60,FJ60	NO.1		90982-08135-	1	455	458
	8110-	BJ60,HJ60			90982-08187-	1	459	
	8110-	FJ60			90982-08135-	1	459	
	8510-	HJ60			90982-08249-	1	567	
		82214A WIRE, LAMP						
	8411-8504	BJ60			82184-90A02-	1	515	554
	8008-8411	BJ60,FJ60			82203-90A00-	1	455	514
	8504-	BJ60,HJ60,FJ60			82184-90A02-	1	555	
	8411-8504	FJ60			82203-90A00-	1	515	554
		82223 WIRE, SWITCH						
	8008-8411	BJ60			82223-90A01-	1	455	514
	8411-8510	BJ60			82164-90A01-	1	515	566
	8510-	HJ60			82164-90A02-	1	567	
C	8608-	HJ60	W/DIFF LOCK		82164-90A03-	1	601	
		82241C WIRE, RELAY						
	8110-8504	FJ60			82241-90A01-	1	459	554
	8008-8110	FJ60••USA			82241-90A00-	1	455	458
		82282 WIRE, DIFF LOCK INDICATOR						
C	8608-	HJ60	FR		82282-90A04-	1	601	
C	8608-	HJ60	RR		82282-90A05-	1	601	
		82345 DIODE						
	8411-8504	BJ60	CONNECTOR=2POLE		82345-12050-	3	515	554
	8008-8509	BJ60,FJ60			82345-12010-	2	455	486
	8309-8411	BJ60,FJ60	CONNECTOR=2POLE			1	487	514

	PROD.DATE	MODELS	DESCRIPTION	R/P	PART NUMBER	QTY	REV.REF.CODE FROM	REV.REF.CODE UP TO
		82345 DIODE CONTINUED						
	8309-8604	BJ60,FJ60	CONNECTOR=4POLE		82345-22010-	1	487	572
	8504--	BJ60,HJ60,FJ60	CONNECTOR=2POLE		82345-12050-	3	555	
	8411-8504	FJ60	CONNECTOR=2POLE		82345-12010-	1	515	554
		82350 WIRING ASSY, COURTESY LAMP SWITCH (FOR FR OR R R DOOR)						
	8411-8504	BJ60			82153-90A00-	1	515	554
	8008-8411	BJ60,FJ60			82350-90A00-	1	455	514
	8504-	BJ60,HJ60,FJ60			82153-90A00-	1	555	
	8411-8504	FJ60			82350-90A00-	1	515	554
		82376 WIRE, MOTOR ANTENNA						
	8504-8603	FJ60			82113-90A00-	1	555	
	8008-8504	FJ60••USA			82377-90A00-	1	455	554
		82412 WIRE, FUEL GAGE						
	8411-8504	BJ60			82155-90A00-	1	515	554
	8008-8411	BJ60,FJ60			82412-90A00-	1	455	514
	8504-	BJ60,HJ60,FJ60			82155-90A00-	1	555	
	8411-8504	FJ60			82412-90A00-	1	515	554
		82470 WIRE ASSY, LICENSE LAMP FEED						
	8411-8504	BJ60			82181-90A00-	1	515	554
	8008-8110	BJ60,FJ60			82470-90A00-	1	455	458
	8110-8411	BJ60,FJ60			82470-90A03-	1	459	514
	8504-	BJ60,HJ60,FJ60			82181-90A00-	1	555	
	8411-8504	FJ60			82470-90A03-	1	515	554
		82670 BLOCK ASSY, JUNCTION						
	8110-8411	BJ60	NO.1		82671-30030--	1	459	514
	8411-	BJ60,HJ60	NO.1		82670-90A00-	1	515	
	8510-	HJ60	NO.2		82670-90K02-	1	567	

FIG.82-02 **GENUINE TOYOTA PARTS**

4-G2

GENUINE TOYOTA PARTS

PROD.DATE	MODELS	DESCRIPTION	R/P	PART NUMBER	QTY	REV.REF.CODE FROM	REV.REF.CODE UP TO
	82672	COVER, JUNKTION BLOCK					
8110-8411	BJ60			# 82672-26010- (82672-22020-)	1	459	514
	82823	CAP, TERMINAL, NO.1					
8008-8604	BJ60,FJ60			82823-90300-	1	455	572

PROD.DATE	MODELS	DESCRIPTION	R/P	PART NUMBER	QTY	REV.REF.CODE FROM	REV.REF.CODE UP TO

(8008–)

ILLUST•NO• 1OF2

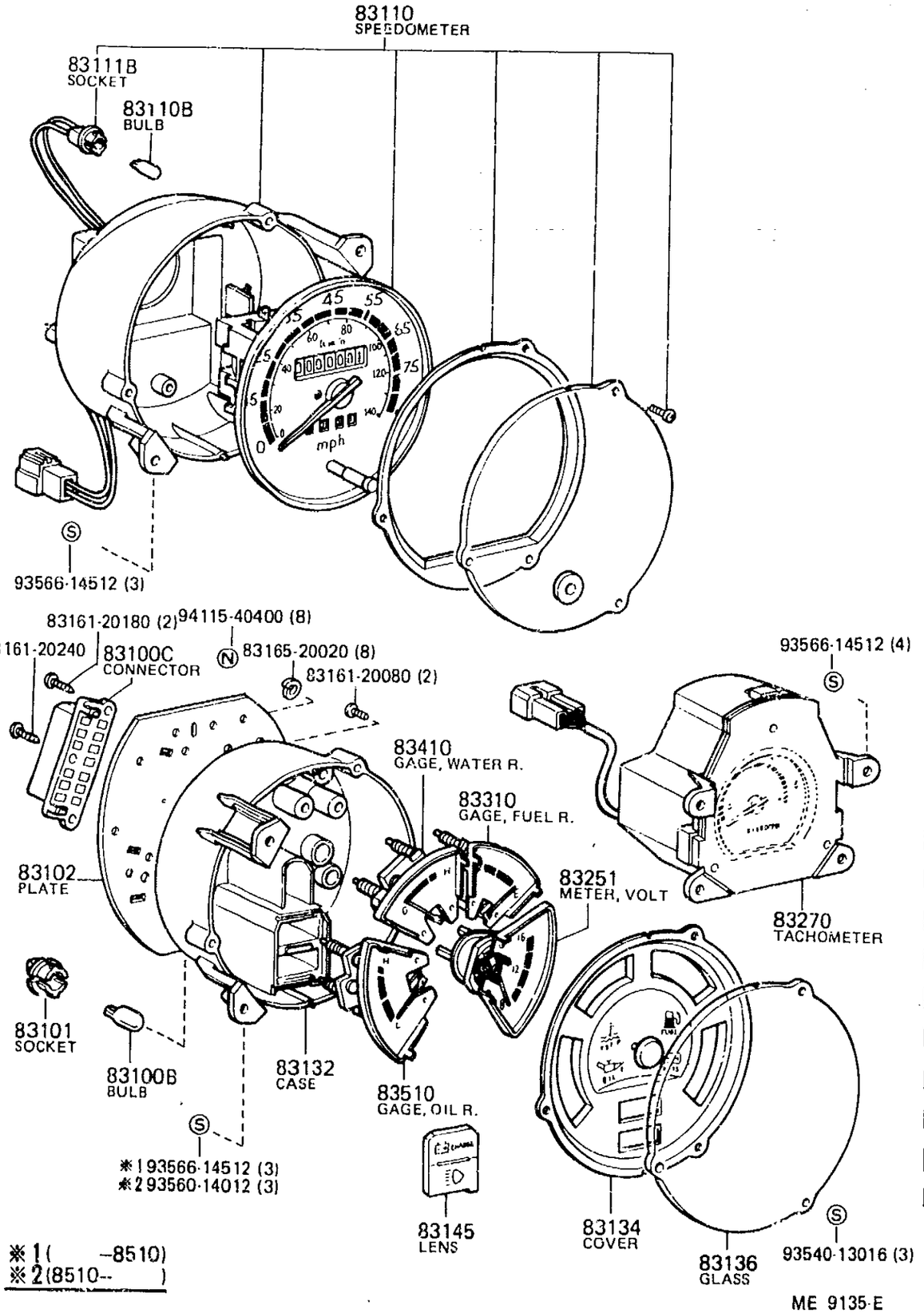

※1 (– –8510)
※2 (8510–)

ME 9135-E

(8008–)

ILLUST•NO• 2OF2

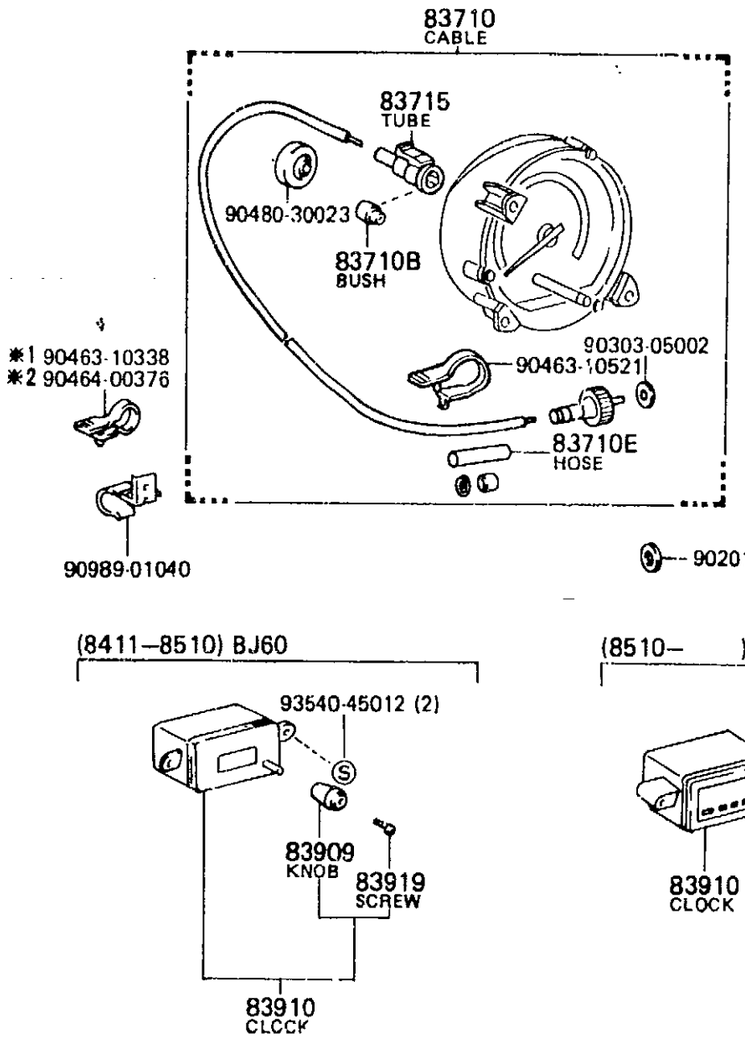

※1 (8008–8411) BJ60
(8008–8504) FJ60
※2 (8411–) BJ60
(8504–) FJ60

BJ60, HJ60 (W/ Tachometer)

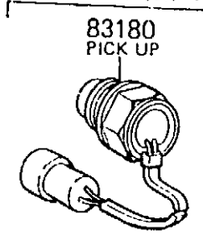

(8411–8510) BJ60

(8510–) HJ60

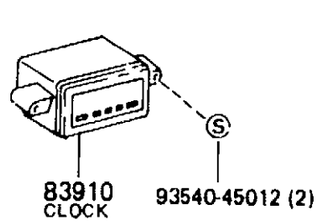

ME C883-D

GENUINE TOYOTA PARTS

	PROD.DATE	MODELS	DESCRIPTION	R/P	PART NUMBER	QTY	REV.REF.CODE FROM	REV.REF.CODE UP TO
	FIG.	83-01 METER						
		83100B BULB, COMBINATION METER, NO.1						
	8008-	BJ60,FJ60	12V 3.4W		99132-12034-	3	455	
C	8510-8608	HJ60	24V 3W		99134-12030-	3	567	600
	8510-	HJ60	24V 1.4W		90981-11022-	1	567	
C	8608-	HJ60	24V 3W	#	90981-16010- (99134-12030-)	3	601	
		83100C CONNECTOR, COMBINATION METER						
	8008-	BJ60,HJ60,FJ60			90980-08209-	1	455	
		83101 SOCKET SUB-ASSY, COMBINATION METER BULB						
C	8008-8608	BJ60,HJ60,FJ60	BULB:24V 3W		83101-20040-	3	455	600
C	8608-	FJ60	BULB:24V 3W			3	601	
	8510-	HJ60	BULB:24V 1.4W		83101-95020-	1	567	
C	8608-	HJ60	BULB:24V 3W		83101-89101-	3	601	
		83102 PLATE SUB-ASSY, COMBINATION METER CIRCUIT, NO.1						
	8411-8504	BJ60			83247-90A03-	1	515	554
	8008-8203	BJ60,FJ60			83247-90A00-	1	455	
	8203-8411	BJ60,FJ60			83247-90A02-	1		514
	8504-	BJ60,FJ60			83247-90A03-	1	555	
	8411-8504	FJ60			83247-90A02-	1	515	554
	8510-	HJ60			83247-90A07-	1	567	
		83110 SPEEDOMETER ASSY						
	8008-8510	BJ60,FJ60..CND			83110-90A10-	1	455	566
	8008-	FJ60..USA			83110-90A11-	1	455	
C	8510-8608	HJ60			83110-90A22-	1	567	600
C	8608-	HJ60			83110-90A45-	1	601	
		83110B BULB, SPEEDOMETER						
	8008-	BJ60,FJ60	12V 3.4W		99132-12034-	2	455	

GENUINE TOYOTA PARTS

	PROD.DATE	MODELS	DESCRIPTION	R/P	PART NUMBER	QTY	REV.REF.CODE FROM	REV.REF.CODE UP TO
		83110B BULB, SPEEDOMETER CONTINUED						
C	8510-8608	HJ60	24V 3W		99134-12030-	2	567	600
C	8608-	HJ60	24V 3W	#	90981-16010- (99134-12030-)	3	601	
		83111B SOCKET SUB-ASSY, SPEEDOMETER BULB						
	8008-	BJ60,HJ60,FJ60			83101-36010-	2	455	
		83132 CASE, COMBINATION METER						
	8008-	BJ60,FJ60			83132-90A00-	1	455	
	8510-	HJ60			83132-90A04-	1	567	
		83134 COVER, COMBINATION METER, NO.1						
	8008-	BJ60,FJ60			83134-90A00-	1	455	
C	8510-8608	HJ60			83134-90A05-	1	567	600
C	8608-	HJ60			83134-90A06-	1	601	
		83136 GLASS, GAGE METER						
	8008-	BJ60,HJ60,FJ60			83138-90A00-	1	455	
		83145 LENS, METER, NO.1						
	8008-	BJ60,FJ60			83145-90A00-	1	455	
	8510-	HJ60			83145-90A02-	1	567	
		83180 PICKUP, TACHOMETER						
	8008-8411	BJ60			83180-60030-	1	455	514
	8411-	BJ60,HJ60			83180-60040-	1	515	
		83251 METER, VOLTAGE						
	8008-	BJ60,FJ60			83245-90A00-	1	455	
C	8510-8608	HJ60			83245-90A01-	1	567	600
C	8608-	HJ60			83245-90A04-	1	601	
		83270 TACHOMETER ASSY, ENGINE						
	8008-8411	BJ60			83270-90A01-	1	455	514
	8411-8510	BJ60			83270-90A05-	1	515	566
	8008-8304	FJ60			83270-90A00-	1	455	

GENUINE TOYOTA PARTS

	PROD.DATE	MODELS	DESCRIPTION	R/P	PART NUMBER	QTY	REV.REF.CODE FROM	REV.REF.CODE UP TO
		83270 TACHOMETER ASSY, ENGINE CONTINUED						
	8304-	FJ60			83270-90A03-	1		
C	8510-8608	HJ60			83270-90A06-	1	567	600
C	8608-	HJ60			83270-90A12-	1	601	
		83310 GAGE ASSY, FUEL RECEIVER						
	8411-8504	BJ60			83243-90A02-	1	515	554
	8008-8411	BJ60,FJ60			83243-90A00-	1	455	514
	8504-	BJ60,FJ60			83243-90A02-	1	555	
C	8510-8608	HJ60			83243-90A00-	1	567	600
C	8608-	HJ60			83243-90A04-	1	601	
		83410 GAGE ASSY, WATER TEMPERATURE RECEIVER						
C	8008-8608	BJ60,HJ60,FJ60			83244-90A00-	1	601	600
C	8608-	FJ60				1	601	
C	8608-	HJ60			83244-90A02-	1	601	
		83510 GAGE ASSY, OIL PRESSURE RECEIVER						
	8008-	BJ60,FJ60			83246-90A00-	1	455	
C	8510-8608	HJ60			83246-90A04-	1	567	600
C	8608-	HJ60			83246-90A06-	1	601	
		83710 CABLE ASSY, SPEEDOMETER DRIVE, NO.1						
	8008-	BJ60,HJ60,FJ60••MTM			83710-90A01-	1	455	
	8510-	HJ60••ATM			83710-90A04-	1	567	
		83710B BUSH, SPEEDOMETER DRIVE CABLE						
	8008-	BJ60,HJ60,FJ60			90389-02001-	1	455	
		83710E HOSE, SPEEDOMETER DRIVE CABLE						
	8510-	HJ60••ATM			90446-10008-	1	567	
	8411-	HJ60,FJ60••MTM			90446-10002-	1	515	
		83715 TUBE, SPEEDOMETER CASING						
	8411-	HJ60,FJ60			83715-90A00-	1	515	

PROD.DATE	MODELS	DESCRIPTION	R/P	PART NUMBER	QTY	REV.REF.CODE FROM	REV.REF.CODE UP TO
	83909 KNOB, CLOCK						
8411-8510	BJ60			83909-12230-	1	515	566
	83910 CLOCK ASSY						
8411-8510	BJ60			83910-90A00-	1	515	566
8510-	HJ60			83910-90A06-	1	567	
	83919 SCREW, CLOCK						
8411-8510	BJ60			83919-12230-	1	515	566

GENUINE TOYOTA PARTS

(8008–)

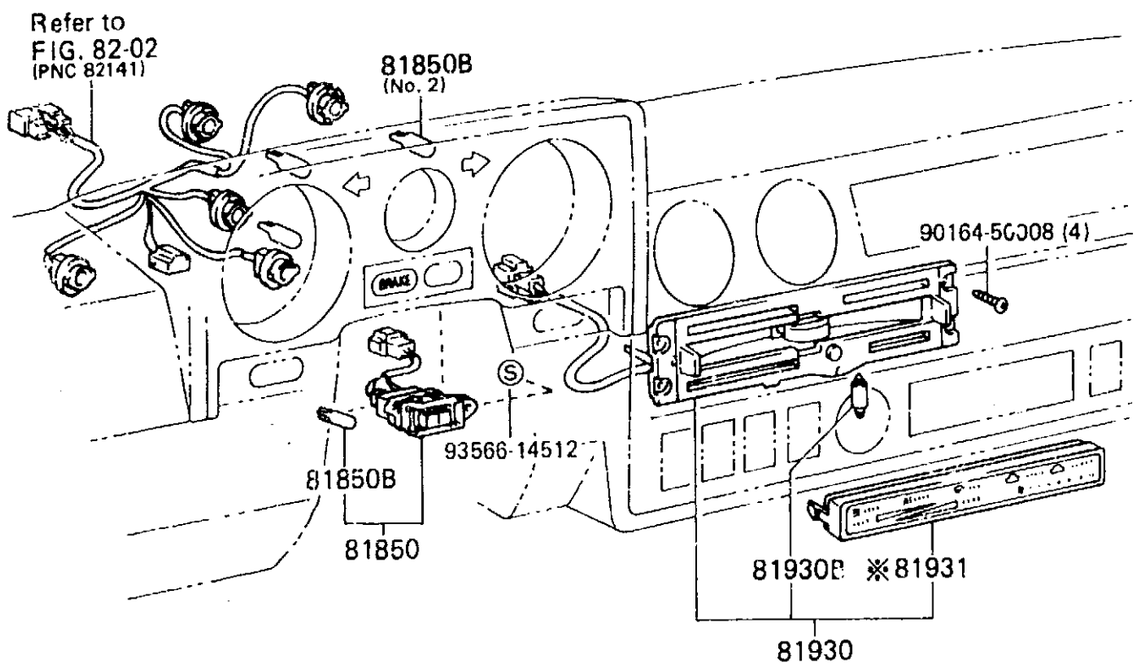

(8210–)

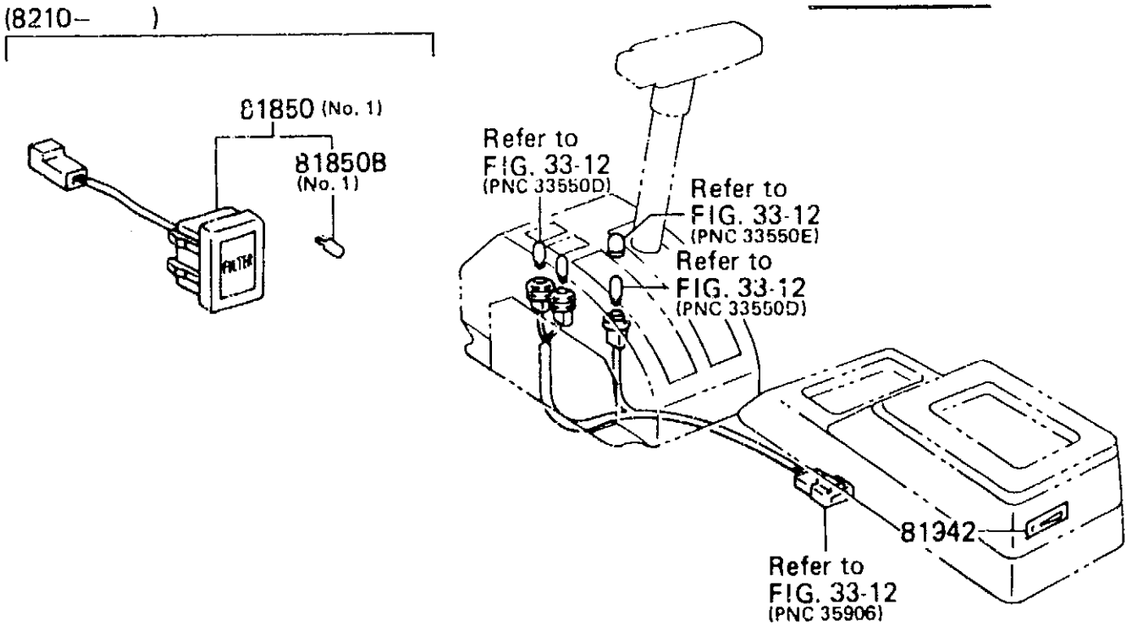

ME C868-D

	PROD.DATE	MODELS	DESCRIPTION	R/P	PART NUMBER	QTY	REV.REF.CODE FROM	REV.REF.CODE UP TO
	FIG.	83-02 INDICATOR						
		81850 LAMP ASSY, INDICATOR						
	8210–8510	BJ60	NO.1		81850-90A02–	1	467	566
	8510–	HJ60	NO.1		81850-90A03–	1	567	
C	8608–	HJ60	DIFF LOCK		81850-90A09–	1	601	
		81850B BULB, INDICATOR LAMP						
	8210–8510	BJ60	NO.1,12V 1.4W		90981-11018–	1	467	566
	8008–	BJ60,FJ60	NO.2,12V 3.4W		99132-12034–	6	455	
	8510–	HJ60	NO.1,24V 1.4W		90981-11022–	1	567	
	8510–	HJ60	NO.2,24V 3W		99134-12030–	5	567	
C	8608–	HJ60	DIFF LOCK, 12V 1.4W		90981-11018–	1	601	
		81930 LAMP ASSY, HEATER CONTROL INDICATOR, NO.1						
	8008–8604	BJ60,FJ60			81930-90A02–	1	455	572
	8604–	FJ60			81930-90A06–	1	573	
	8510–	HJ60				1	567	
		81930B BULB, HEATER CONTROL INDICATOR LAMP						
	8008–	BJ60,HJ60,FJ60	12V 2W		90981-11010–	1	455	
		81931 LENS, HEATER CONTROL INDICATOR						
	8008–8604	BJ60,FJ60			81931-90A02–	1	455	572
		81942 SHEET, HEATER CONTROL NAME						
	8510–	HJ60			86995-90A02–	1	567	

(8008-8510)

(8510-)

ILLUST•NO• 10F5

ILLUST•NO• 10F5

FJ60

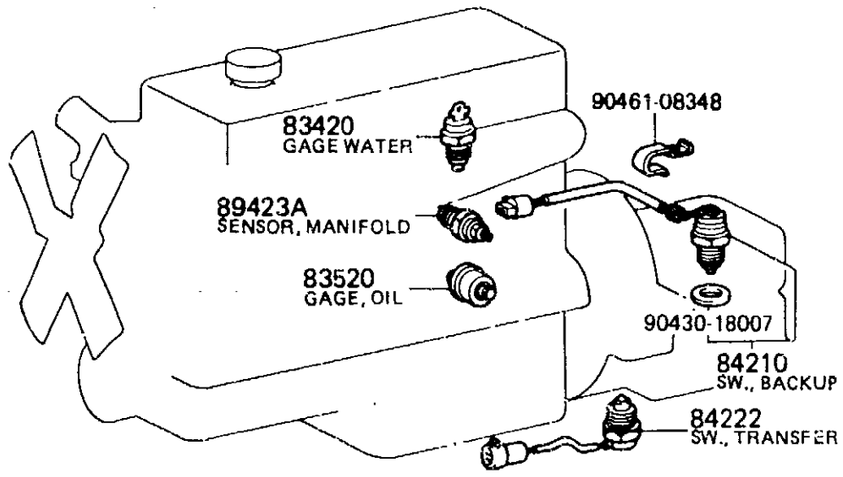

BJ60

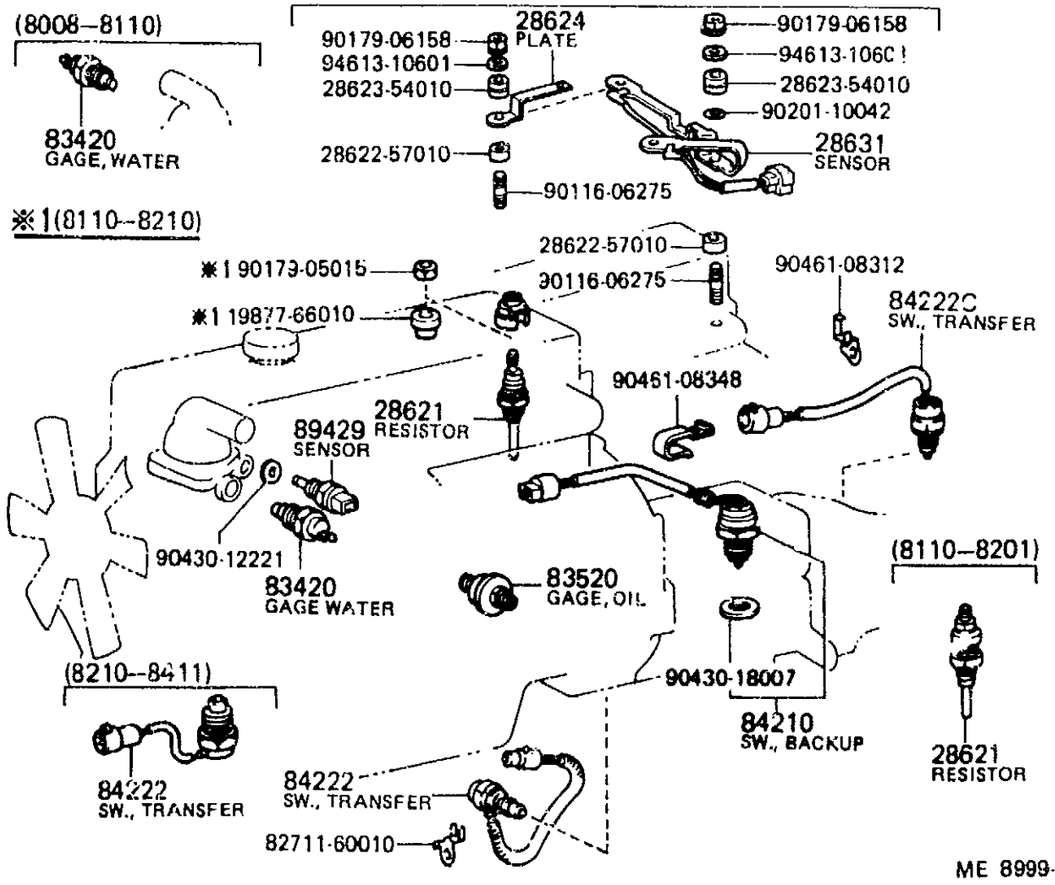

ME 8999-F

HJ60

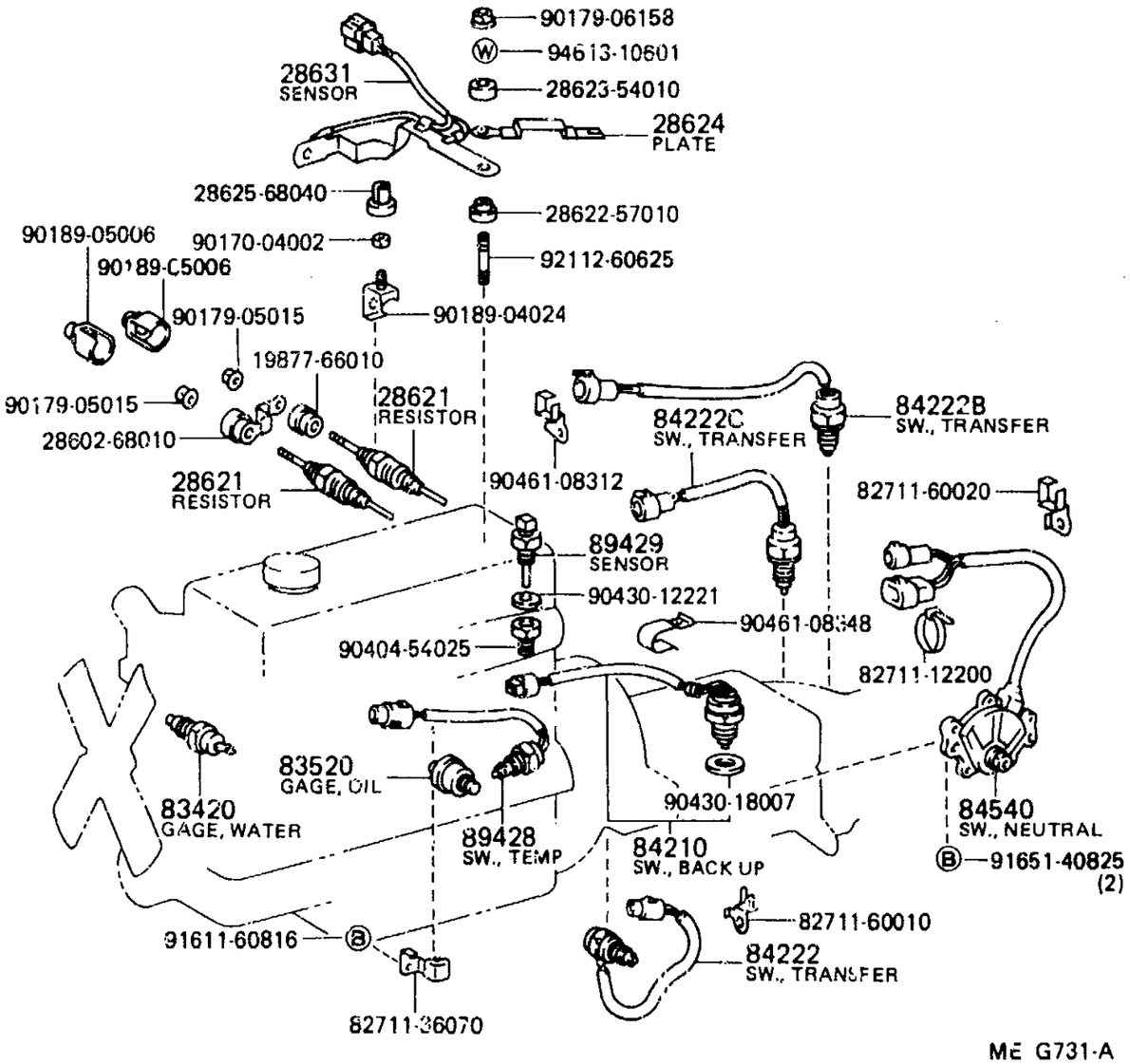

ME G731-A

(8008-)

ILLUST•NO• 2OF5

※1(-8411)
※2(8411-)

Refer to FIG. 19-03 (PNC 27700A)

85430 VALVE, OUTLR

※190119-06005 (2)
※291656-40616 (2)

91611-60812

91611-60610

84001 SW. MAGNET

83390 SW., VACUUM

※194611-10800 (2)

89620 IGNITER

※194110-40800 (2)
※290179-08146 (2)

85440 SOLENOID

※194511-00800 (2)

94613-10800 (2)

※194511-00800 (2)
※294611-10800 (2)

※194110-40800 (2)
※290179-08146 (2)

(8110-)

28611 COVER

90119-06171 (2)

28610 RELAY, GLOW (MAIN)

90464-00190

90179-06158 (2)

83391 SW, VACUUM

Refer to FIG. 19-03 (PNC 27700A)

91651-40612

91651-40612

28610 RELAY, GLOW PLUG (SUB)

28300 RELAY, STARTER

ME 9000-H

(8008-)

ILLUST•NO• 3OF5

(8008-8210)

82600F FUSE

84730 SW., HEATER

84790 SW., DEFOGGER

W/O Cooler

55538-22010

84790B BULB

90160-40008 (2)

84660C SW., COOLER

84660D BULB

84119A NUT

90201-09351

84722F SW., CONTROL

84722H BULB

※190160-40008
※290099-00816

84760 SW., ANTENNA

84119 RHEOSTAT

82600F FUSE

82600G PLATE

82650 BREAKER

84118 KNOB

82616 PULLER

84653A SW., WIPER

84732A SW., HEATER

Refer to FIG. 87-15 (PNC 87017)

84450 SW., IGNITION

93319-13012

85500E PLATE

90462-08006

90463-13003

※90463-15003

※1 (8008-) BJ60
(8008-8504) FJ60
※2 (8504-) FJ60

85520 KNOB

85500B BULB

85533 LENS

85500 LIGHTER

(8008-8110) BJ60

※90463-05023

※90461-12206

84510 SW., STARTER

84310 SW., TURN

93319-15012 (4)

84330 SW., HAZARD

84140 SW., DIMMER

84110 SW., LIGHT

84650 SW., WIPER

84311 PLATE

93315-14010 (4)

※W/Tilt Steering

ME 9001-K

(8008-8411)

ILLUST.NO. 40F5

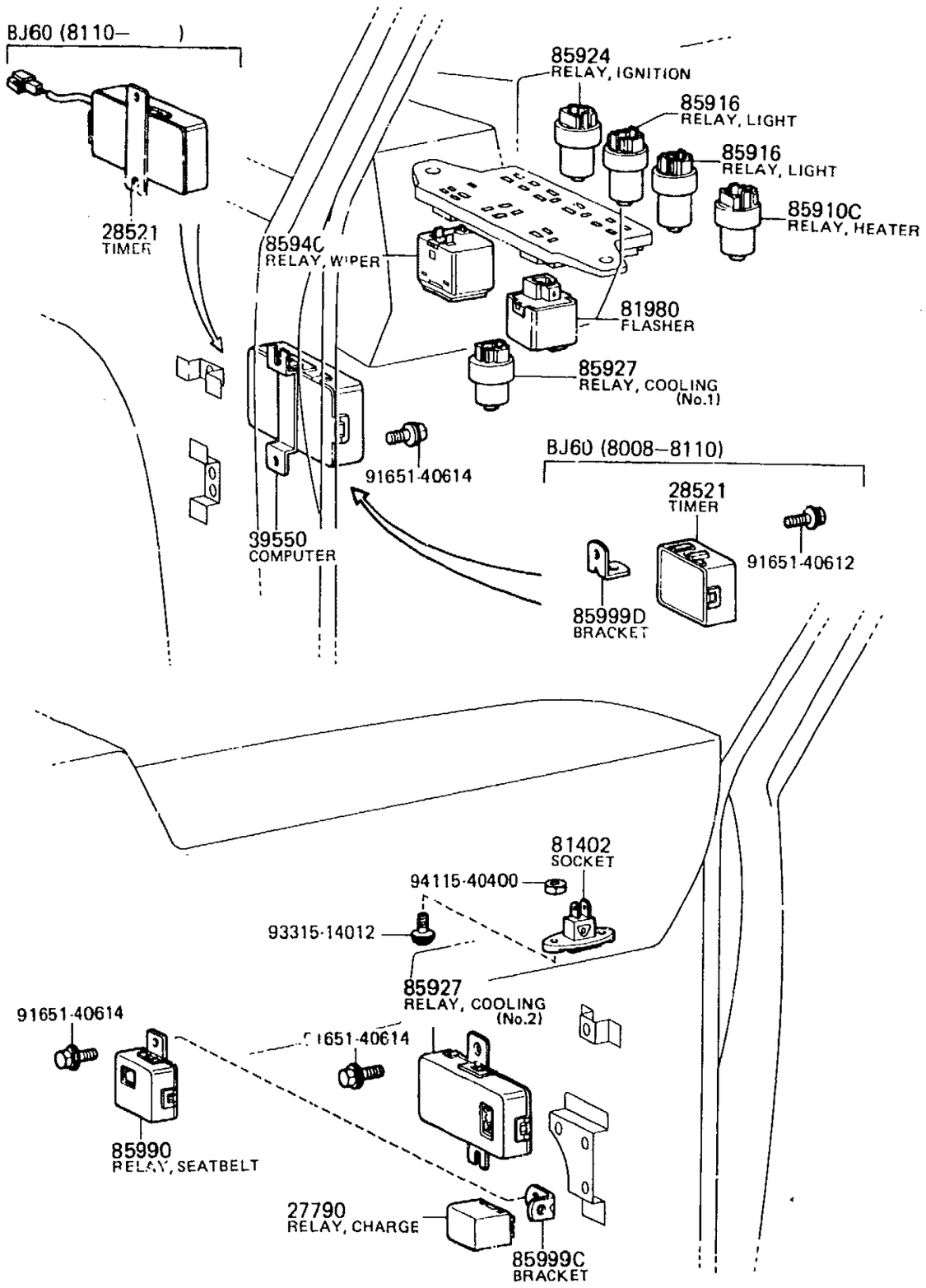

ME 9002-D

(8411-)

ILLUST.NO. 40F5

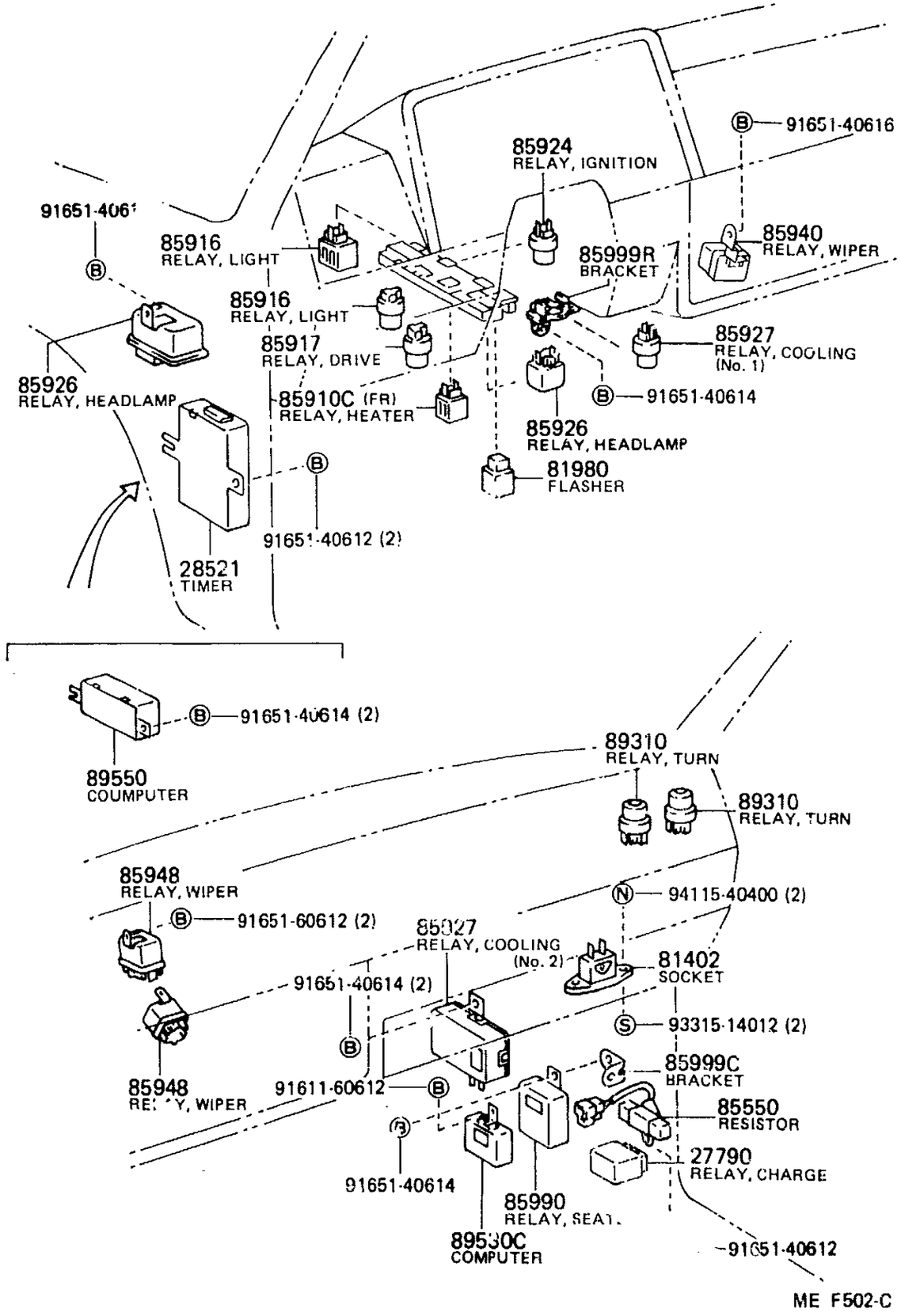

ME F502-C

(8008-)

ILLUST.NO. 5OF5

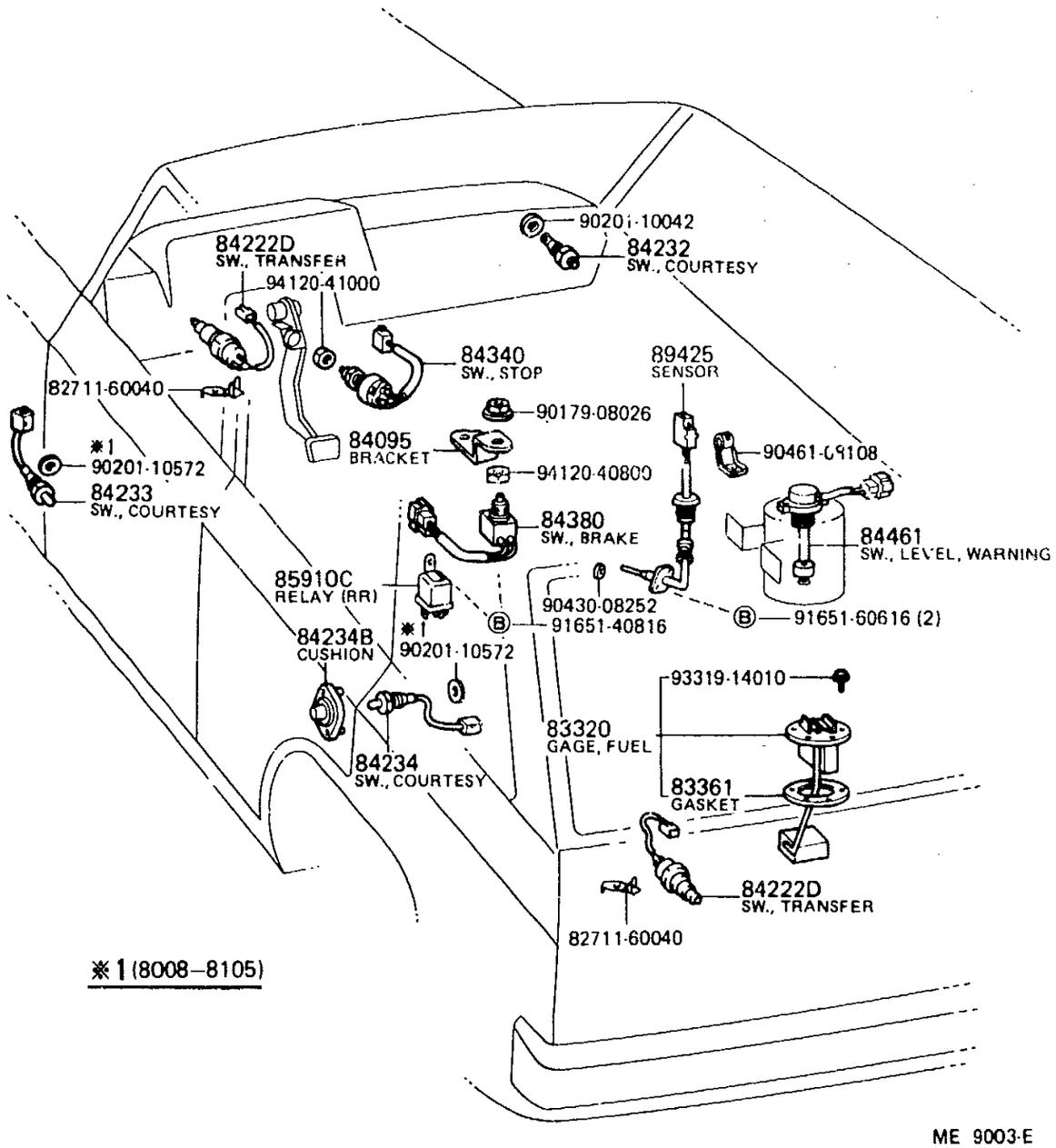

*1 (8008-8105)

GENUINE TOYOTA PARTS

PROD.DATE	MODELS	DESCRIPTION	R/P	PART NUMBER	QTY	REV.REF.CODE FROM	REV.REF.CODE UP TO
FIG.	84-01 SWITCH & RELAY						
	27790 RELAY ASSY, CHARGE LAMP						
8510-	2H..HJ60			27790-57010-	1	567	
8008-	3B,2F..FJ60,BJ60			27790-13010-	1	455	
	28300 RELAY ASSY, STARTER						
8510-	2H..HJ60			28300-56020-	1	567	
8008-8411	3B..BJ60			28300-54020-	1	455	514
8411-8510	3B..BJ60			28300-54070-	1	515	566
	28521 TIMER, PREHEATING						
8510-	2H..HJ60			28521-68051-	1	567	
8008-8110	3B..BJ60			28521-54021-	1	455	458
8110-8411	3B..BJ60			28521-57020-	1	459	514
8411-8510	3B..BJ60			28521-57060-	1	515	566
	28610 RELAY ASSY, GLOW PLUG						
8510-	2H..HJ60	SUB		28610-54180-	1	567	
8510-	2H..HJ60	MAIN		28610-57050-	1	567	
8008-8104	3B..BJ60	SUB	*	28610-57010- (28610-57011-)	1	455	
8104-8110	3B..BJ60	SUB		28610-57011-	1		458
8110-8510	3B..BJ60	SUB		28610-54090-	1	459	514
8110-8510	3B..BJ60	MAIN		28610-57060-	1	459	566
	28611 COVER, GLOW PLUG RELAY						
8110-	3B,2H..BJ60,HJ60			28611-57010-	1	459	
	28621 RESISTOR, GLOW PLUG						
8510-	2H..HJ60			28621-64011-	2	567	
8110-8201	3B..BJ60		*	28621-57020- (28621-57021-) • (19877-66010-) • (90179-05015-)	1	459	
8201-8510	3B..BJ60			28621-57021-	1		566

GENUINE TOYOTA PARTS

	PROD.DATE	MODELS	DESCRIPTION	R/P	PART NUMBER	QTY	REV.REF.CODE FROM	REV.REF.CODE UP TO
		28624 PLATE, CURRENT SENSOR						
	8510-	2H••HJ60			28624-68011-	1	567	
	8110-8510	3B••BJ60			28624-57010-	1	459	566
		28631 SENSOR, GLOW PLUG CURRENT						
	8510-	2H••HJ60			28631-68010-	1	567	
	8110-8510	3B••BJ60			28631-57020-	1	459	566
		81402 SOCKET SUB-ASSY, INSPECTION LAMP, NO.1						
C	8008--8608	BJ60,HJ60,FJ60			81402-29016-	1	455	600
		81980 FLASHER ASSY, TURN SIGNAL						
	8008-8110	BJ60,FJ60			# 81980-22060- (81980-22070-)	1	455	458
C	8110-8604	BJ60,FJ60			81980-22070-	1	459	
C	8604-	FJ60			81980-16010-	1		
	8510-	HJ60			81980-36060-	1	567	
		82600F FUSE, FUSE BLOCK						
	8008-8210	BJ60,FJ60	5A		# 90982-07008- (99118-62005-)	6	455	466
	8008-8210	BJ60,FJ60	10A		99118-62910-	7	455	466
	8008-8210	BJ60,FJ60	15A		99118-62915-	5	455	466
	8008-8210	BJ60,FJ60	20A		99118-62920-	1	455	466
	8210-	BJ60,HJ60,FJ60	10A		90982-09002-	5	467	
	8210-	BJ60,HJ60,FJ60	15A		90982-09003-	7	467	
	8210-	BJ60,HJ60,FJ60	20A		90982-09004-	2	467	
	8210-	BJ60,HJ60,FJ60	7.5A		90982-09005-	7	467	
		82600G PLATE, CAUTION (FOR FUSE)						
	8008-8210	BJ60			82683-90A02-	1	455	466
	8210-8411	BJ60			82683-90A07-	1	467	514
	8411-8510	BJ60			82683-90A10-	1	515	566
	8008-8210	FJ60			82683-90A00-	1	455	466
	8210-8504	FJ60			82683-90A05-	1	467	554
C	8504-8608	FJ60			82683-90A09-	1	555	600

	PROD.DATE	MODELS	DESCRIPTION	R/P	PART NUMBER	QTY	REV.REF.CODE FROM	REV.REF.CODE UP TO
		82600G PLATE, CAUTION (FOR FUSE) CONTINUED						
C	8608-	FJ60			82683-90A15-	1	601	
C	8510-8608	HJ60			82683-90A13-	1	567	600
C	8608-	HJ60			82683-90A14-	1	601	
		82616 PULLER, FUSE						
	8210-	BJ60,HJ60,FJ60			82616-12010-	1	467	
		82650 BREAKER ASSY, WIRING CIRCUIT, NO.1						
	8411-8504	BJ60			# 82650-32020- (82650-20011-)	1	515	554
	8008-8112	BJ60,FJ60			# 82650-20010- (82650-20011-)	1	455	
	8112-8411	BJ60,FJ60			82650-20011-	2		514
	8504-	BJ60,HJ60,FJ60			# 82650-32020- (82650-20011-)	1	555	
	8411-8504	FJ60			82650-20011-	2	515	554
		83320 GAGE ASSY, FUEL SENDER						
	8008-	BJ60,HJ60,FJ60			83320-69015-	1	455	
		83361 GASKET, FUEL SENDER GAGE						
	8008-	BJ60,HJ60,FJ60			83361-20030-	1	455	
		83390 SWITCH ASSY, VACUUM WARNING						
	8008-8402	BJ60	MARK=300		83390-60010-	1	455	
	8402-	BJ60,HJ60	MARK=200		83390-30020-	1		
		83391 SWITCH, VACUUM						
	8008-	FJ60••USA			83391-12050-	1	455	
		83420 GAGE ASSY, WATER TEMPERATURE SENDER						
	8008-	BJ60,HJ60,FJ60			83420-20020-	1	455	
		83520 GAGE ASSY, OIL PRESSURE SENDER						
	8008-8301	BJ60,FJ60	DENSO		# 83520-14021- (83520-14022-)	1	455	
	8008-8301	BJ60,FJ60	YAZAKI		83520-55011-	1	455	

PROD.DATE	MODELS	DESCRIPTION	R/P	PART NUMBER	QTY	REV.REF.CODE FROM	REV.REF.CODE UP TO
	83520 GAGE ASSY, OIL PRESSURE SENDER						
	CONTINUED						
8301-	BJ60,FJ60	YAZAKI		83520-60010-	1		
8510-	HJ60			83520-60020-	1	567	
	84001 SWITCH ASSY, MAGNET						
8008-8411	BJ60			38630-60060-	1	455	514
8411-8502	BJ60			38630-60040-	1	515	
8008-8604	FJ60				1	455	572
	84095 BRACKET SUB-ASSY, HAND BRAKE SIGNAL SWITCH						
8008-8110	BJ60,FJ60			# 84956-60020- (84956-60030-)	1	455	458
8110-	BJ60,HJ60,FJ60			84956-60030-	1	459	
	84110 SWITCH ASSY, LIGHT CONTROL, NO.1						
8210-	BJ60,FJ60			84112-69295-	1	467	
8008-8210	BJ60,FJ60..CND			84112-69085-	1	455	466
8008-8210	FJ60	W/POWER STEERING		84112-69045-	1	455	466
8510-	HJ60			84112-69335-	1	567	
	84118 KNOB, LIGHT CONTROL RHEOSTAT						
8008-	BJ60,HJ60,FJ60			84118-90A00-	1	455	
	84119 RHEOSTAT, LIGHT CONTROL						
8411-8504	BJ60			84119-90A01-	1	515	554
8008-8411	BJ60,FJ60			# 84119-90A00- (84119-90A01-)	1	455	514
8504-	BJ60,FJ60			84119-90A01-	1	555	
8411-8504	FJ60			# 84119-90A00- (84119-90A01-)	1	515	554
8510-	HJ60			84119-90A02-	1	567	
	84119A BOLT OR NUT, RHEOSTAT CONTROL SET						
8411-8504	BJ60			90170-09167-	1	515	554
8504-	BJ60,HJ60,FJ60				1	555	

PROD.DATE	MODELS	DESCRIPTION	R/P	PART NUMBER	QTY	REV.REF.CODE FROM	REV.REF.CODE UP TO
	84140 SWITCH ASSY, HEADLAMP DIMMER						
8008-8210	BJ60,FJ60			84140-39045-	1	455	466
8210-	BJ60,FJ60			84140-19055-	1	467	
8510-	HJ60			84140-69085-	1	567	
	84210 SWITCH ASSY, BACK UP LAMP						
8008-	BJ60,HJ60,FJ60..MTM			84210-60021-	1	455	
	84222 SWITCH, TRANSFER INDICATOR, NO.1						
8210-8301	BJ60,FJ60			84222-60020-	1	467	488
8301-	BJ60,HJ60,FJ60			84222-60021-	1	489	
	84222B SWITCH, TRANSFER INDICATOR, NO.2						
8510-	HJ60..ATM			84222-60030-	1	567	
	84222C SWITCH, TRANSFER INDICATOR, NO.3						
8411-	BJ60,HJ60			84222-60040-	1	515	
	84222D SWITCH, TRANSFER INDICATOR, NO.4						
C 8608-	HJ60,FJ60			84222-60060-	2	601	
	84232 SWITCH ASSY, COURTESY LAMP (FOR GLOVE BOX)						
8110-	BJ60,HJ60,FJ60			84242-90A00-	1	459	
8008-8110	FJ60..USA			84231-14020-	1	455	458
	84233 SWITCH ASSY, COURTESY LAMP (FOR FRONT DOOR)						
8008-8105	BJ60,FJ60			# 84230-22050- (84230-22051-)	2	455	
8105-	BJ60,HJ60,FJ60			84230-22051-	2		
	84234 SWITCH ASSY, COURTESY LAMP (FOR REAR DOOR)						
8008-8105	BJ60,FJ60			# 84230-22050- (84230-22051-)	2	455	
8105-	BJ60,HJ60,FJ60			84230-22051-	2		
	84234B CUSHION, COURTESY SWITCH (FOR REAR DOOR)						
8008-8105	BJ60,FJ60			84234-22010-	2	455	
8105-	BJ60,HJ60,FJ60			84234-24010-	2		
	84310 SWITCH ASSY, TURN SIGNAL						
8210-	BJ60,FJ60			84310-60430-	1	467	

PROD.DATE	MODELS	DESCRIPTION	R/P	PART NUMBER	QTY	REV.REF.CODE FROM	REV.REF.CODE UP TO
	84310 SWITCH ASSY, TURN SIGNAL CONTINUED						
8008-8210	BJ60,FJ60••CND			84310-60170-	1	455	466
8008-8210	FJ60	W/POWER STEERING		84310-60180-	1	455	466
8510-	HJ60			84310-60470-	1	567	
	84312 PLATE, HORN CONTACT						
8008-	BJ60,HJ60,FJ60			84312-20011-	1	455	
	84330 SWITCH ASSY, HAZARD WARNING SIGNAL						
8008-8210	BJ60,FJ60			84332-39105-	1	455	466
8210-	BJ60,FJ60			84332-69055-	1	467	
8510-	HJ60			84332-69095-	1	567	
	84340 SWITCH ASSY, STOP LAMP						
8008-8102	BJ60,FJ60	MATSUSHITA	#	84340-22060- (84340-36030-)	1	455	
8008-8202	BJ60,FJ60		#	84340-22071- (84340-22072-)	1	455	
8202-	BJ60,HJ60,FJ60			84340-22072-	1		
	84380 SWITCH ASSY, BRAKE WARNING TEST						
8008-	BJ60,HJ60,FJ60			84380-20010-	1	455	
	84450 SWITCH ASSY, IGNITION						
8110-8309	BJ60,FJ60			84450-60080-	1	459	486
8309-	BJ60,HJ60,FJ60			84450-60100-	1	487	
8008-8110	FJ60			84450-60080-	1	455	458
	84461 SWITCH, LEVEL WARNING						
8008-8210	BJ60			84461-60020-	1	455	
8210-8411	BJ60			84461-30040-	1	467	514
8411-	BJ60,HJ60			84461-60020-	1	515	
	84510 SWITCH ASSY, STARTER						
8008-8110	BJ60			84510-60040-	1	455	458

GENUINE TOYOTA PARTS

PROD.DATE	MODELS	DESCRIPTION	R/P	PART NUMBER	QTY	REV.REF.CODE FROM	REV.REF.CODE UP TO
	84540 SWITCH ASSY, NEUTRAL START						
8510-	HJ60••ATM			84540-60020-	1	567	
	84650 SWITCH ASSY, WINDSHIELD WIPER						
8210-	BJ60,FJ60			84652-69345-	1	467	
8008-8210	BJ60,FJ60••CND			84652-69085-	1	455	466
8008-8210	FJ60	W/POWER STEERING		84652-69045-	1	455	466
8510-	HJ60			84652-69385-	1	567	
	84653A SWITCH, REAR WIPER						
8008-	BJ60,HJ60,FJ60			84653-90A00-	1	455	
	84660C SWITCH, COOLER						
8411-8510	BJ60			84660-22021-	1	515	566
8008-	FJ60••USA				1	455	
8510-	HJ60			88610-90A01-	1	567	
	84660D BULB (FOR COOLER SWITCH)						
8411-8510	BJ60			90981-11024-	1	515	566
8008-8510	FJ60••USA				1	455	566
	84722F SWITCH, TRANSMISSION CONTROL						
8411-8510	BJ60			84722-60070-	1	515	566
8510-	HJ60			84722-60080-	1	567	
	84722H BULB, TRANSMISSION CONTROL SWITCH						
8411-8510	BJ60			84999-10170-	1	515	566
8510-	HJ60			84999-10100-	1	567	
	84730 SWITCH ASSY, HEATER BLOWER						
8008-	BJ60,HJ60,FJ60	FR HEATER		84730-90A00-	1	455	
	84732A SWITCH, REAR HEATER BLOWER						
8008-	BJ60,FJ60			84730-90A01-	1	455	
8510-	HJ60			84732-90A00-	1	567	

GENUINE TOYOTA PARTS

	PROD.DATE	MODELS	DESCRIPTION	R/P	PART NUMBER	QTY	REV.REF.CODE FROM	REV.REF.CODE UP TO
		84760 SWITCH ASSY, ANTENNA						
	8008-	FJ60••USA			84760-90A00-	1	455	
		84790 SWITCH ASSY, REAR WINDOW DEFOGGER						
	8008-	BJ60,FJ60			84790-20050-	1	455	
	8510-	HJ60			84790-90A05-	1	567	
		84790B BULB (FOR REAR WINDOW DEFOGGER SWITCH)						
	8008-	BJ60,FJ60	12V 1•4W		90981-11024-	2	455	
C	8510-	HJ60	24V 1•4W		90981-16022-	2	567	
		85430 VALVE, OUTER VENT CONTROL						
	8008-	FJ60••USA			85430-60010-	1	455	
		85440 SOLENOID ASSY, FRONT DRIVE						
	8411-8510	BJ60			85440-60080-	1	515	566
	8510-	HJ60			85440-60090-	1	567	
		85500 LIGHTER ASSY, CIGARETTE						
	8411-8504	BJ60			85500-90A07-	1	515	554
	8008-8111	BJ60,FJ60			85500-22090-	1	455	
	8111-8411	BJ60,FJ60			85500-90A04-	1		514
	8504-	BJ60,FJ60			85500-90A07-	1	555	
	8411-8504	FJ60			85500-90A04-	1	515	554
	8510-	HJ60			85500-90A08-	1	567	
		85500B BULB, CIGARETTE LIGHTER						
C	8008-	BJ60,FJ60	12V 1•4W		90981-11014-	1	455	
C	8510-	HJ60	24V 1•8W		90981-16020-	1	567	
		85500E PLATE, VOLTAGE CAUTION						
	8510-	HJ60	24V		74534-90K00-	1	567	
		85520 KNOB AND ELEMENT ASSY, CIGARETTE LIGHTER						
	8411-8504	BJ60			85520-14030-	1	515	554
	8008-8411	BJ60,FJ60			85520-30151-	1	455	514

PROD.DATE	MODELS	DESCRIPTION	R/P	PART NUMBER	QTY	REV.REF.CODE FROM	REV.REF.CODE UP TO
	85520 KNOB AND ELEMENT ASSY, CIGARETTE LIGHTER CONTINUED						
8504-	BJ60,FJ60			85520-14030-	1	555	
8411-8504	FJ60			85520-30151-	1	515	554
	85533 LENS, CIGARETTE LIGHTER INDICATOR						
8008-8208	BJ60,FJ60			85533-20010-	1	455	
8208-	BJ60,FJ60			85533-20011-	1		
	85550 RESISTOR ASSY, PILOT LAMP						
8510-	HJ60			85550-90A00-	1	567	
	85910C RELAY ASSY (FOR HEATER BLOWER MOTOR)						
8411-8504	BJ60			85913-30020-	1	515	554
8008-8103	BJ60,FJ60			# 90987-02001- (90999-99089-)	1	455	
8103-8411	BJ60,FJ60			90987-02004-	1		514
8504-	BJ60,FJ60			85913-30020-	1	555	
8411-8504	FJ60			90987-02004-	1	515	554
8008-8510	FJ60••USA	W/COOLER		85913-90A01-	1	455	566
8510-8512	HJ60	RR HEATER		85940-26010-	1	567	
8510-	HJ60	FR HEATER		85913-90K00-	1	567	
8512-	HJ60	RR HEATER		85980-90A00-	1		
	85916 RELAY, LIGHT CONTROL						
8411-8504	BJ60	TAIL		90987-01003-	1	515	554
8411-8504	BJ60	HEAD		90987-02006-	1	515	554
8008-8103	BJ60,FJ60	TAIL & HEAD	#	90987-01001- (90999-99088-)	2	455	
8103-8411	BJ60,FJ60	TAIL & HEAD		90987-01003-	2		514
8504-	BJ60,FJ60	TAIL			1	555	
8504-	BJ60,FJ60	HEAD		90987-02006-	1	555	
8411-8504	FJ60	TAIL & HEAD		90987-01003-	2	515	554
8510-	HJ60	TAIL		90987-01004-	1	567	
8510-	HJ60	HEAD		90987-02007-	1	567	

PROD.DATE	MODELS	DESCRIPTION	R/P	PART NUMBER	QTY	REV.REF CODE FROM	REV.REF CODE UP TO
	85917 RELAY, FRONT DRIVE						
8411-8510	BJ60			90987-03001-	1	515	566
8510-	HJ60			90987-03002-	1	567	
	85924 RELAY, IGNITION CONTROL						
8008-8103	BJ60,FJ60			# 90987-02001- (90999-99089-)	1	455	
8103-	BJ60,FJ60			90987-02004-	1		
8510-	HJ60			90987-02005-	1	567	
	85926 RELAY, HEADLAMP DIMMER						
8510-	HJ60	CONNECTOR=8POLE		85926-60010-	1	567	
8510-	HJ60	CONNECTOR=4POLE		85926-90K00-	1	567	
	85927 RELAY, COOLING FAN						
8008-	FJ60••USA	NO.2		85927-60040-	1	455	
8008-	FJ60••USA	NO.1		90987-02004-	1	455	
	85940 RELAY ASSY, WINDSHIELD WIPER						
8411-8504	BJ60			85940-90A04-	1	515	554
8008-8411	BJ60,FJ60			85940-90A01-	1	455	514
8504-	BJ60,FJ60			85940-90A04-	1	555	
8411-8504	FJ60			85940-90A01-	1	515	554
8510-	HJ60			85940-90A07-	1	567	
	85948 RELAY, WINDSHIELD WIPER						
8510-	HJ60			85940-26010-	2	567	
	85990 RELAY OR COMPUTER ASSY, SEAT BELT WARNING						
8008-8309	BJ60,FJ60			85991-60020-	1	455	486
8309-	BJ60,FJ60			85991-22020-	1	487	
8510-	HJ60			85991-90A00-	1	567	
	85999C BRACKET, RELAY, NO.3						
8008-	BJ60,HJ60,FJ60	CHARGE LAMP RELAY		85999-89101-	1	455	

PROD.DATE	MODELS	DESCRIPTION	R/P	PART NUMBER	QTY	REV.REF CODE FROM	REV.REF CODE UP TO
	85999D BRACKET, RELAY, NO.4						
8008-8110	BJ60			85999-89101-	1	455	458
	85999R BRACKET, RELAY						
8604-	FJ60			85999-12050-	1	573	
	89310 RELAY ASSY, TURN SIGNAL CANCELLING						
8510-	HJ60			90987-02005-	2	567	
	89423A SENSOR, MANIFOLD TEMPERATURE						
8008-	FJ60••USA			89423-60020-	1	455	
	89425 SENSOR, EXHAUST GAS TEMPERATURE						
8504-	FJ60			89425-60030-	1	555	
8008-8504	FJ60••USA			89425-69035-	1	455	554
	89428 SWITCH, TEMPERATURE DETECT, NO.2						
8510-	HJ60••ATM			89428-36010-	1	567	
	89429 SENSOR, TEMPERATURE						
8110-	BJ60,HJ60			89422-30020-	1	459	
	89530C COMPUTER ASSY, TRANSMISSION CONTROL						
8510-	HJ60••ATM			89530-60030-	1	567	
	89550 COMPUTER ASSY, EMISSION CONTROL						
8008-	FJ60••USA			89550-60130-	1	455	
	89620 IGNITER ASSY						
8008-8110	FJ60••CND			89620-60042-	1	455	458
8008-	FJ60••USA			89620-60060-	1	455	

GENUINE TOYOTA PARTS

FIG.84-06 ELECTRONIC DIESEL INJECTION CONTROL SYSTEM

4-H3

MR4-11-0486

(8008-8510)BJ60

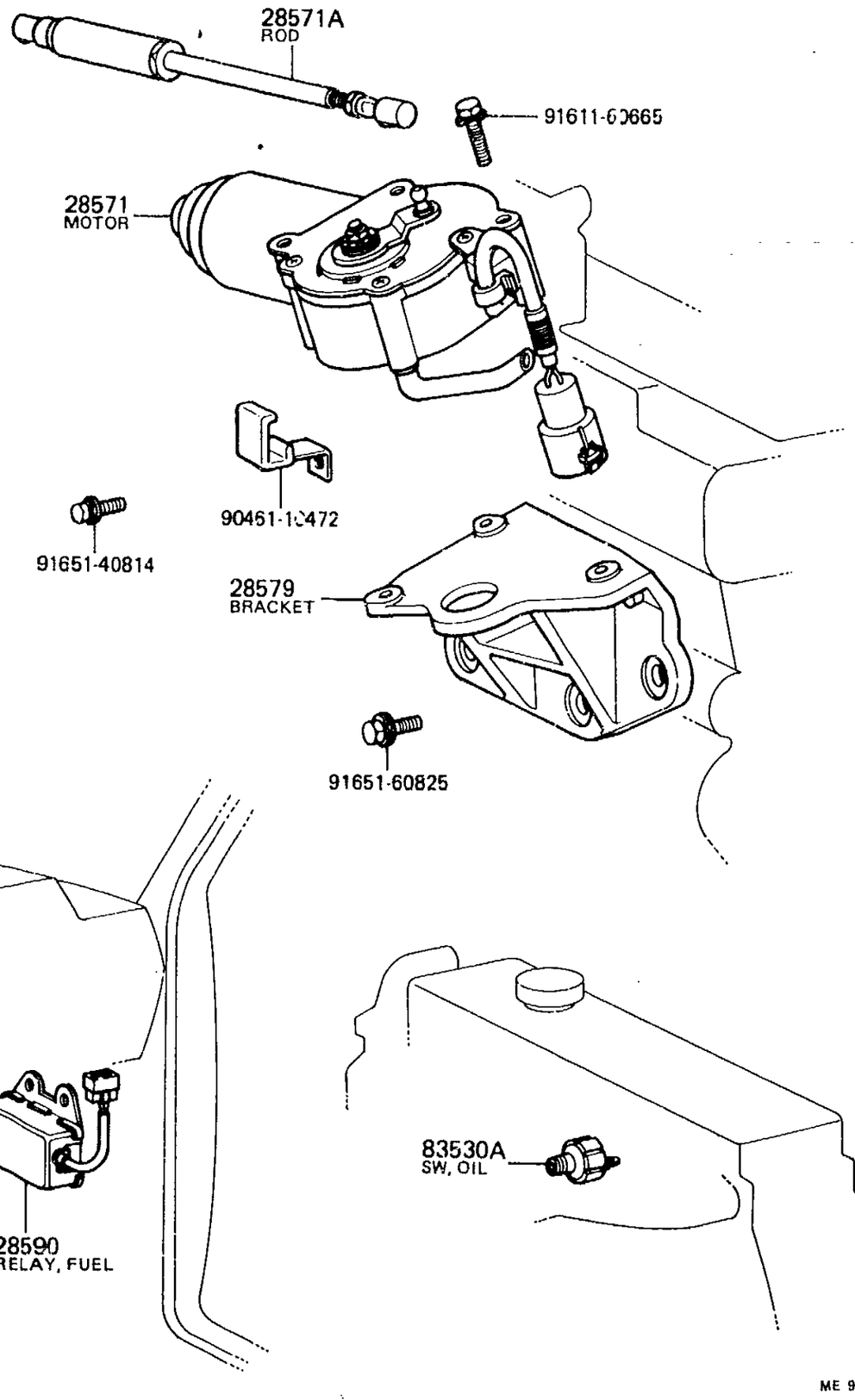

ME 9036

(8510-8601)HJ60••MTM; (8601-)HJ60

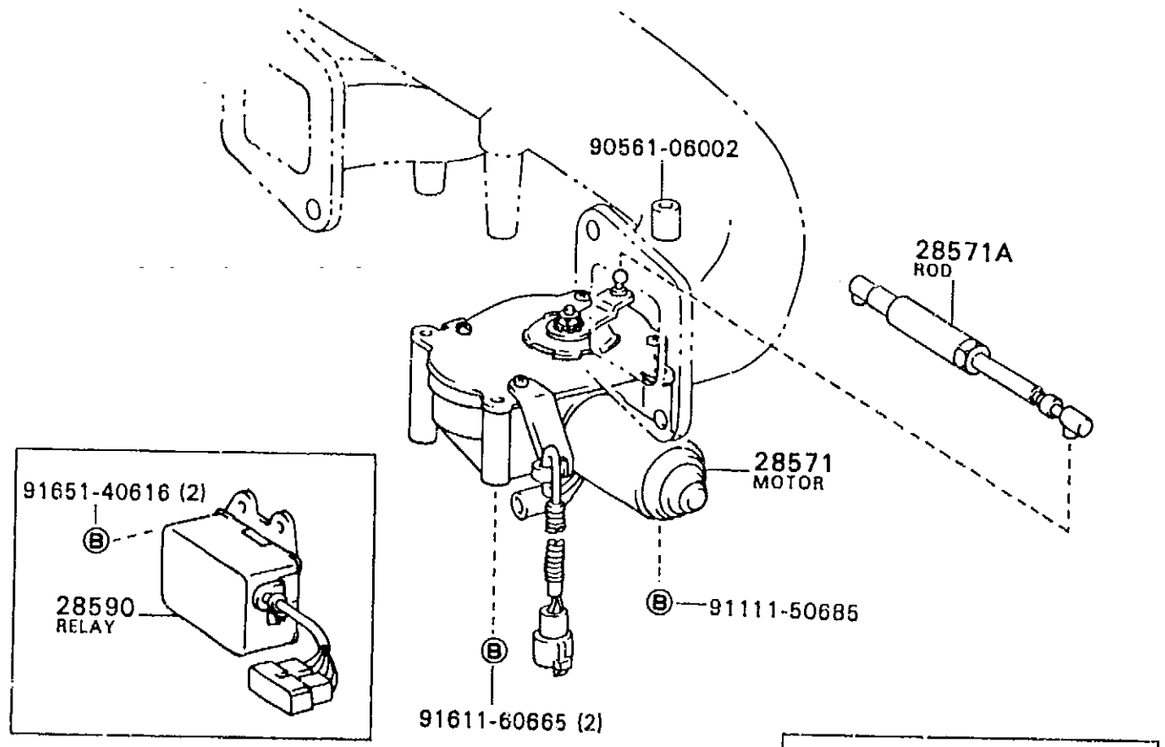

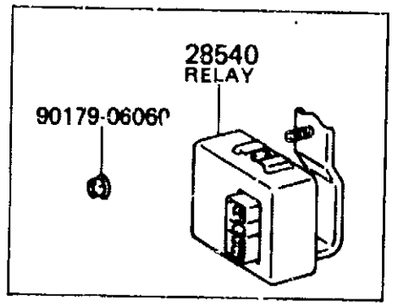

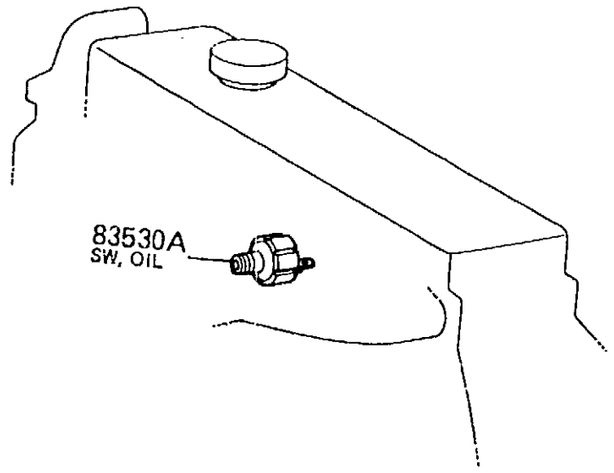

ME G732-A

PROD.DATE	MODELS	DESCRIPTION	R/P	PART NUMBER	QTY	REV.REF.CODE FROM	REV.REF.CODE UP TO
FIG.	84-06 ELECTRONIC DIESEL INJECTION CONTROL SYSTEM						
	28540 RELAY ASSY, AIR CONTROL						
8601-	2H..HJ60..ATM			28540-68010-	1		
	28571 MOTOR, FUEL CONTROL						
8510-	2H..HJ60..MTM			28571-56150-	1	567	
8008-8510	3B..BJ60			28571-56120-	1	455	566
	28571A ROD, FUEL CONTROL MOTOR						
8510-	2H..HJ60..MTM			84580-36040-	1	567	
8008-8510	3B..BJ60			84580-36021-	1	455	566
	28579 BRACKET, FUEL CONTROL MOTOR						
8008-8510	3B..BJ60			28579-56030-	1	455	566
	28590 RELAY ASSY, FUEL CONTROL						
8510-	2H..HJ60..MTM			28590-56100-	1	567	
8008-8510	3B..BJ60			28590-56090-	1	455	566
	83530A SWITCH ASSY, OIL PRESSURE						
8008-8602	BJ60,HJ60..MTM			# 83530-14010- (83530-14030-)	1	455	
8602-	HJ60			83530-14030-	1		
8601-8602	HJ60..ATM			# 83530-14010- (83530-14030-)	1		

PROD.DATE	MODELS	DESCRIPTION	R/P	PART NUMBER	QTY	REV.REF.CODE FROM	REV.REF.CODE UP TO

FIG.85-01 WINDSHIELD WIPER

(8008-)

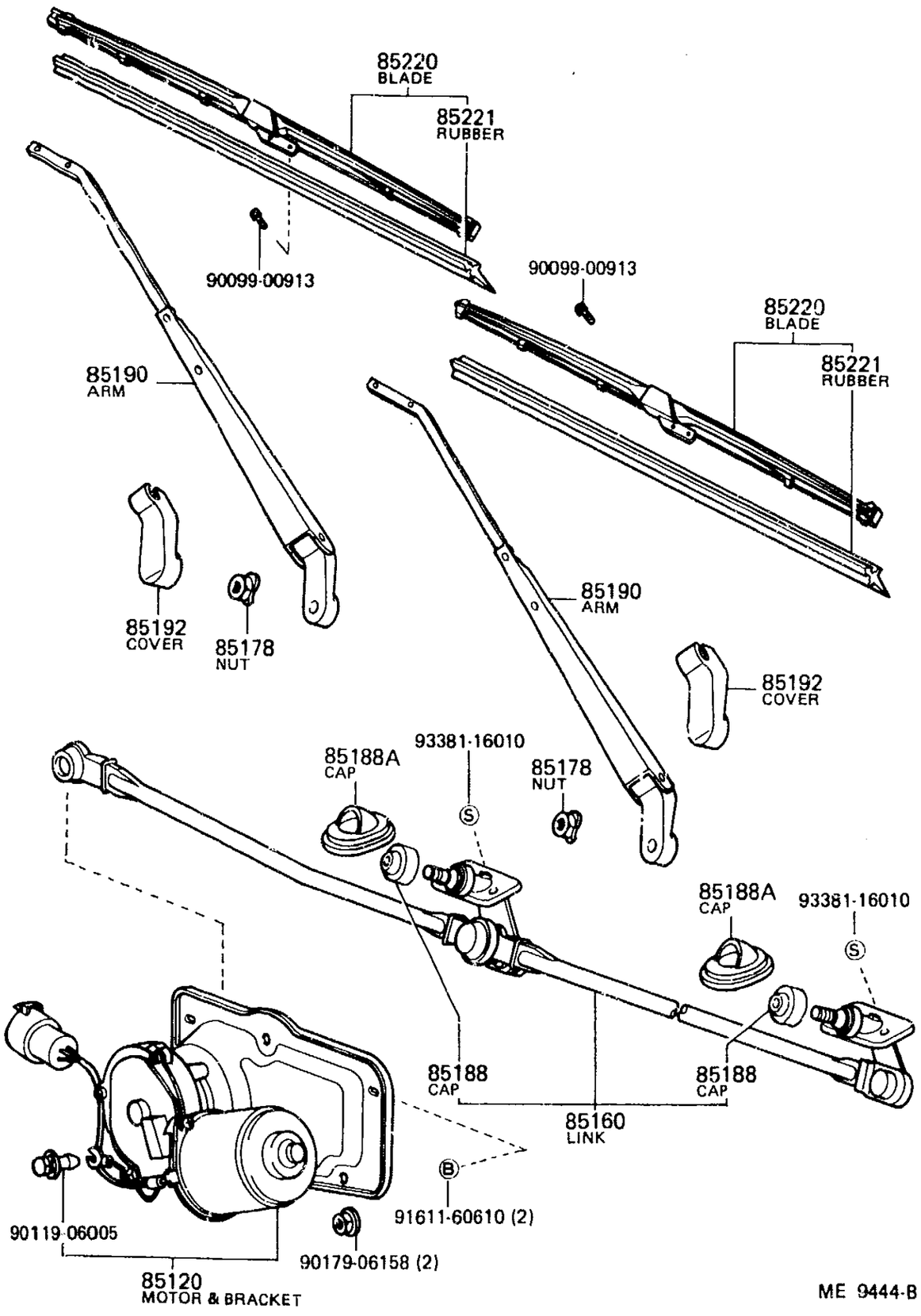

GENUINE TOYOTA PARTS

	PROD.DATE	MODELS	DESCRIPTION	R/P	PART NUMBER	QTY	REV.REF.CODE FROM	REV.REF.CODE UP TO
	FIG.	85-01 WINDSHIELD WIPER						
		85120 MOTOR AND BRACKET ASSY, WINDSHIELD WIPER						
C	8008-8608	BJ60,FJ60			85120-90A21-	1	455	600
C	8608-	FJ60			85120-90A29-	1	601	
C	8510-8608	HJ60			85120-90A23-	1	567	600
C	8608-	HJ60			85120-90A28-	1	601	
		85160 LINK ASSY, WINDSHIELD WIPER						
C	8008-8608	BJ60,HJ60,FJ60			85160-90A05-	1	455	600
C	8608-	HJ60,FJ60			85160-90A07-	1	601	
		85178 NUT (FOR WIPER ARM SETTING)						
	8008-	BJ60,HJ60,FJ60			90179-08026-	2	455	
		85188 CAP, WINDSHIELD WIPER PIVOT, NO.1						
	8008-	BJ60,HJ60,FJ60			85178-90A00-	2	455	
		85188A CAP, WINDSHIELD WIPER PIVOT, NO.2						
	8008-	BJ60,HJ60,FJ60			85247-90A01-	2	455	
		85190 ARM ASSY, WINDSHIELD WIPER						
	8008-8110	BJ60,FJ60		LH	85190-90A02-	1	455	458
	8008-8110	BJ60,FJ60		RH	85210-90A01-	1	455	458
	8110-8210	BJ60,FJ60		LH	85190-90A05-	1	459	466
	8110-8210	BJ60,FJ60		RH	85210-90A04-	1	459	466
	8210-	BJ60,HJ60,FJ60		LH	85190-90A02-	1	467	
	8210-	BJ60,HJ60,FJ60		RH	85210-90A01-	1	467	
		85192 COVER, WINDSHIELD WIPER ARM						
	8008-	BJ60,HJ60,FJ60			85192-14010-	2	455	
		85220 BLADE ASSY, WINDSHIELD WIPER						
	8008-8110	BJ60,FJ60			# 85220-90A01- (85220-90A08-)	2	455	458
	8110-8210	BJ60,FJ60			85220-90A06-	2	459	466
	8210-8307	BJ60,FJ60		LH	# 85220-16140- (85220-16270-)	1	467	

GENUINE TOYOTA PARTS

PROD.DATE	MODELS	DESCRIPTION	R/P	PART NUMBER	QTY	REV.REF.CODE FROM	REV.REF.CODE UP TO
	85220 BLADE ASSY, WINDSHIELD WIPER CONTINUED						
8210-8307	BJ60,FJ60	RH		85220-16150-	1	467	
8307-8311	BJ60,FJ60	RH		85220-16290-	1		
8307-	BJ60,HJ60,FJ60	LH		85220-16270-	1		
8311-	BJ60,HJ60,FJ60	RH		85220-16340-	1		
	85221 RUBBER, WINDSHIELD WIPER						
8008-8110	BJ60,FJ60		#	85221-90A00- (85221-90A04-)	2	455	458
8110-8210	BJ60,FJ60			85221-90A04-	2	459	466
8210-8307	BJ60,FJ60			85221-12120-	2	467	
8307-	BJ60,HJ60,FJ60			85221-30100-	2		

GENUINE TOYOTA PARTS

PROD.DATE	MODELS	DESCRIPTION	R/P	PART NUMBER	QTY	REV.REF.CODE FROM	REV.REF.CODE UP TO

(8008-)

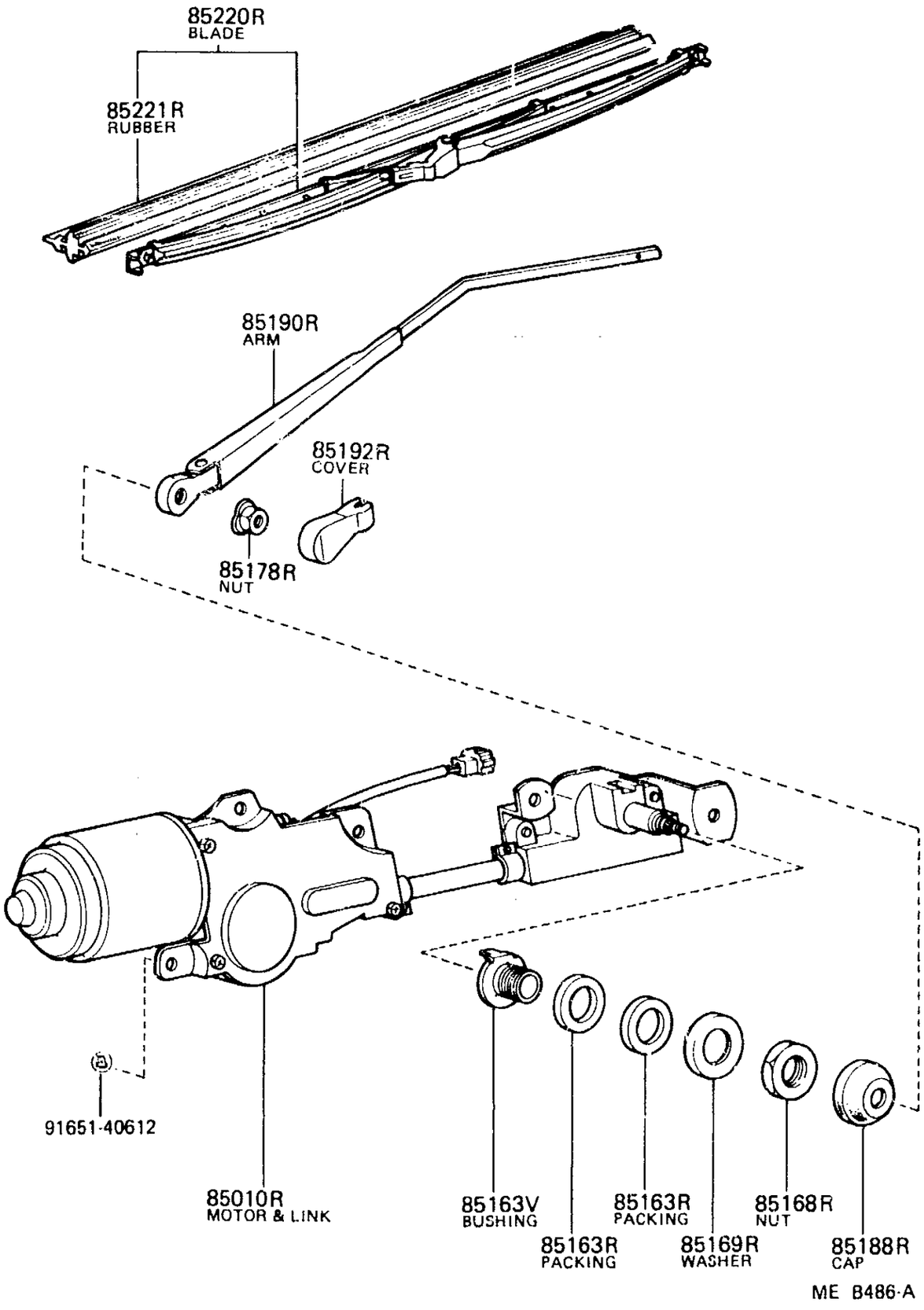

GENUINE TOYOTA PARTS

PROD.DATE	MODELS	DESCRIPTION	R/P	PART NUMBER	QTY	REV.REF.CODE FROM	REV.REF.CODE UP TO
FIG.	85-02 REAR WIPER						
	85010R | MOTOR AND LINK ASSY, REAR WIPER						
8008-	BJ60,FJ60			85010-90A00-	1	455	
8510-	HJ60			85010-90A01-	1	567	
	85163R | PACKING, REAR WIPER PIVOT, NO.1						
8008-	BJ60,HJ60,FJ60			85174-12320-	2	455	
	85163V | BUSH, REAR WIPER LINK PIVOT						
8008-	BJ60,HJ60,FJ60			85176-90A00-	1	455	
	85168R | NUT, REAR WIPER LINK PIVOT, NO.1						
8008-	BJ60,HJ60,FJ60			90099-05141-	1	455	
	85169R | WASHER, REAR WIPER LINK PIVOT, NO.1						
8008-	BJ60,HJ60,FJ60			90099-01458-	1	455	
	85178R | NUT (FOR REAR WIPER ARM SETTING)						
8008-	BJ60,HJ60,FJ60			90179-06158-	1	455	
	85188R | CAP, REAR WIPER PIVOT, NO.1						
8008-	BJ60,HJ60,FJ60			85178-12320-	1	455	
	85190R | ARM ASSY, REAR WIPER						
8411-8504	BJ60			85190-90A06-	1	515	554
8008-8411	BJ60,FJ60			85190-90A00-	1	455	514
8504-	BJ60,HJ60,FJ60			85190-90A06-	1	555	
8411-8504	FJ60			85190-90A00-	1	515	554
	85192R | COVER, REAR WIPER ARM						
8008-8301	BJ60,FJ60			# 85192-90300- (85195-95700-)	1	455	
8301-	BJ60,HJ60,FJ60			85195-95700-	1		
	85220R | BLADE ASSY, REAR WIPER						
8008-	BJ60,HJ60,FJ60			85220-90A02-	1	455	

GENUINE TOYOTA PARTS

PROD.DATE	MODELS	DESCRIPTION	R/P	PART NUMBER	QTY	REV.REF.CODE FROM	REV.REF.CODE UP TO
	85221R RUBBER, REAR WIPER						
8008-	BJ60,HJ60,FJ60			85221-90A02-	1	455	

PROD.DATE | MODELS | DESCRIPTION | R/P | PART NUMBER | QTY | REV.REF.CODE FROM | REV.REF.CODE UP TO

FIG.85-03 WINDSHIELD WASHER

4-A4

MR4-11-0487

(8008-8411); (8411-8504)FJ60••USA

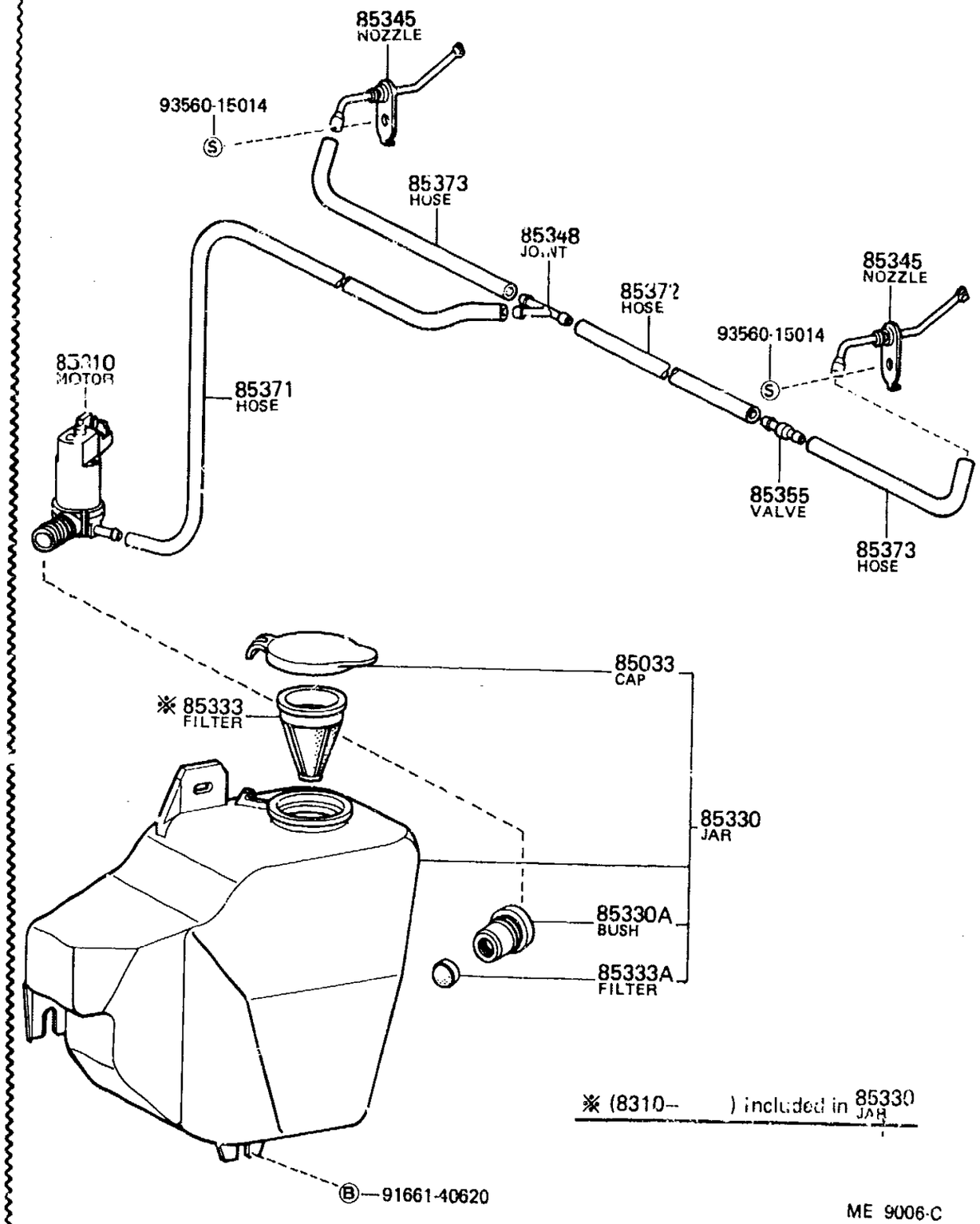

※ (8310-) included in 85330 JAR

ME 9006-C

(8411-8510)BJ60; (8504-)FJ60; (8510-)HJ60

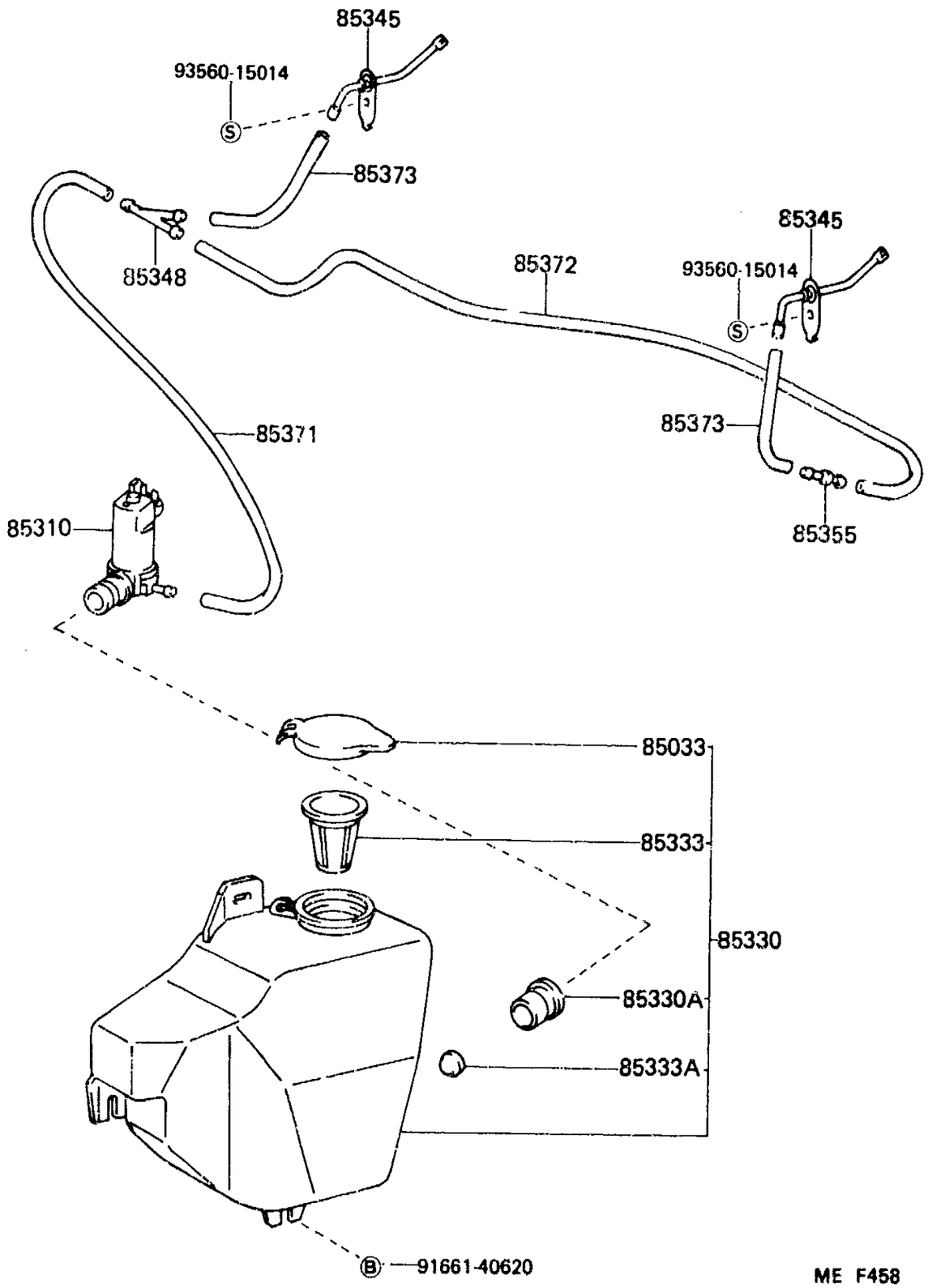

ME F458

GENUINE TOYOTA PARTS

PROD.DATE	MODELS	DESCRIPTION	R/P	PART NUMBER	QTY	REV.REF.CODE FROM	REV.REF.CODE UP TO
FIG.	85-03 WINDSHIELD WASHER						
	85033 CAP ASSY, WINDSHIELD WASHER						
8008-	BJ60,HJ60,FJ60			85332-90A01-	1	455	
	85310 MOTOR AND PUMP ASSY, WINDSHIELD WASHER						
8411-8504	BJ60			85310-12130-	1	515	554
8008-8210	BJ60,FJ60			# 85310-20130- (85310-12130-)	1	455	466
8210-8310	BJ60,FJ60			85310-10140-	1	467	498
8310-8411	BJ60,FJ60			# 85310-20130- (85310-12130-)	1	499	514
8504-	BJ60,FJ60			85310-12130-	1	555	
8411-8504	FJ60			# 85310-20130- (85310-12130-)	1	515	554
8510-	HJ60			85310-90K01-	1	567	
	85330 JAR ASSY, WINDSHIELD WASHER						
8008-8210	BJ60,FJ60			85330-90A02-	1	455	466
8210-8310	BJ60,FJ60			85330-90A06-	1	467	498
8310-	BJ60,HJ60,FJ60			85330-90A07-	1	499	
	85330A BUSH, WINDSHIELD WASHER JAR						
8008-8210	BJ60,FJ60			90099-32103-	1	455	466
8210-8310	BJ60,FJ60			90099-32089-	1	467	498
8310-	BJ60,HJ60,FJ60			90099-32103-	1	499	
	85333 FILTER, WINDSHIELD WASHER JAR						
8008-8210	BJ60,FJ60			85333-60010-	1	455	466
8310-	BJ60,HJ60,FJ60				1	499	
	85333A FILTER, WINDSHIELD WASHER JAR, NO.2						
8008-8210	BJ60,FJ60			85333-20020-	1	455	466
8310-	BJ60,HJ60,FJ60				1	499	
	85345 NOZZLE, WINDSHIELD WASHER						
8411-8504	BJ60	LH		85341-90A05-	1	515	554
8411-8504	BJ60	RH		85341-90A08-	1	515	554

GENUINE TOYOTA PARTS

PROD.DATE	MODELS	DESCRIPTION	R/P	PART NUMBER	QTY	REV.REF.CODE FROM	REV.REF.CODE UP TO
	85345 NOZZLE, WINDSHIELD WASHER CONTINUED						
8008-8210	BJ60,FJ60			# 85341-90A02- (85341-90A05-)	2	455	466
8210-8310	BJ60,FJ60			85341-90A04-	2	467	498
8310-8411	BJ60,FJ60			85341-90A05-	2	499	514
8504-	BJ60,HJ60,FJ60	LH			1	555	
8504-	BJ60,HJ60,FJ60	RH		85341-90A08-	1	555	
8411-8504	FJ60			85341-90A05-	2	515	554
	85348 JOINT, WINDSHIELD WASHER HOSE						
8008-8210	BJ60,FJ60			85348-89101-	1	455	466
8210-8310	BJ60,FJ60			# 85355-14010- (85348-12250-)	1	467	498
8310-	BJ60,HJ60,FJ60			85348-89101-	1	499	
	85355 VALVE, WINDSHIELD WASHER HOSE						
8008-8210	BJ60,FJ60			85031-90A01-	1	455	466
8210-8310	BJ60,FJ60			85031-30010-	1	467	498
8310-	BJ60,HJ60,FJ60			85031-90A01-	1	499	
	85371 HOSE, WINDSHIELD WASHER (FROM MOTOR TO JOINT OR NOZZLE)						
8411-8504	BJ60	*H,L=620		90099-33332-	1	515	554
8008-8210	BJ60,FJ60	L=720		90445-09006-	1	455	466
8210-8310	BJ60,FJ60	*H,L=700		90099-33299-	1	467	498
8310-8411	BJ60,FJ60	L=720		90445-09006-	1	499	514
8504-	BJ60,HJ60,FJ60	*H,L=620		90099-33332-	1	555	
8411-8504	FJ60	L=720		90445-09006-	1	515	554
	85372 HOSE, WINDSHIELD WASHER (FROM JOINT TO JOINT OR NOZZLE)						
8411-8504	BJ60	*H,L=530		90099-33332-	1	515	554
8008-8210	BJ60,FJ60	*H,L=450			1	455	466
8210-8310	BJ60,FJ60	*H,L=450		90099-33299-	1	467	498
8310-8411	BJ60,FJ60	*H,L=450		90099-33332-	1	499	514
8504-	BJ60,HJ60,FJ60	*H,L=530			1	555	
8411-8504	FJ60	*H,L=450			1	515	554

* H, L = Cut hose to length as specified in remarks

FIG.85-03 **GENUINE TOYOTA PARTS** **4-C4** **GENUINE TOYOTA PARTS**

PROD.DATE	MODELS	DESCRIPTION	R/P	PART NUMBER	QTY	REV.REF.CODE FROM	REV.REF.CODE UP TO
	85373 HOSE, WINDSHIELD WASHER (FROM JOINT TO NOZZLE)						
8411-8504	BJ60	*H,L=140		90099-33332-	2	515	554
8008-8210	BJ60,FJ60	*H,L=130			2	455	466
8210-8310	BJ60,FJ60	*H,L=110		90099-33299-	2	467	498
8310-8411	BJ60,FJ60	*H,L=130		90099-33332-	2	499	514
8504-	BJ60,HJ60,FJ60	*H,L=140			2	555	
8411-8504	FJ60	*H,L=130			2	515	554

PROD.DATE	MODELS	DESCRIPTION	R/P	PART NUMBER	QTY	REV.REF.CODE FROM	REV.REF.CODE U. TO

* H, L = Cut hose to length as specified in remarks

FIG.85-04 REAR WASHER

4-D4

MR4-13-0296

(8008-)

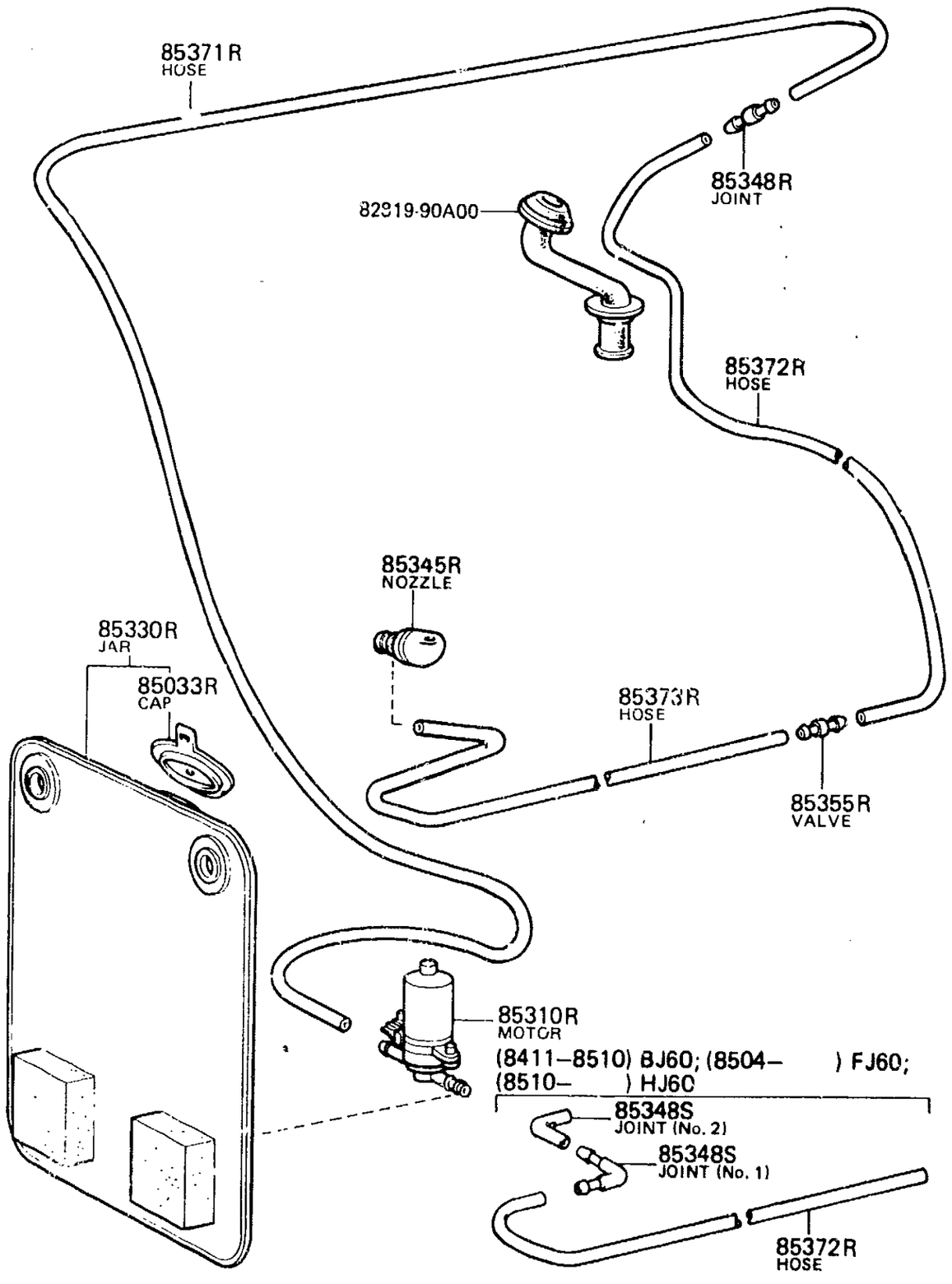

GENUINE TOYOTA PARTS

PROD.DATE	MODELS	DESCRIPTION	R/P	PART NUMBER	QTY	REV.REF.CODE FROM	REV.REF.CODE UP TO
FIG.	85-04 REAR WASHER						
	85033R CAP ASSY, REAR WASHER						
8008-	BJ60,HJ60,FJ60			85332-20050-	1	455	
	85310R MOTOR ASSY, REAR WASHER						
8008-8210	BJ60,FJ60			85310-20100-	1	455	466
8210-	BJ60,FJ60			85310-22080-	1	467	
8510-	HJ60			85310-90B00-	1	567	
	85330R JAR ASSY, REAR WASHER						
8411-8504	BJ60			85330-90A08-	1	515	554
8008-8411	BJ60,FJ60			85330-90A05-	1	455	514
8504-	BJ60,HJ60,FJ60			85330-90A08-	1	555	
8411-8504	FJ60			85330-90A05-	1	515	554
	85345R NOZZLE, REAR WASHER						
8411-8504	BJ60			85035-90A02-	1	515	554
8008-8411	BJ60,FJ60			85035-90A01-	1	455	514
8504-	BJ60,HJ60,FJ60			85035-90A02-	1	555	
8411-8504	FJ60			85035-90A01-	1	515	554
	85348R JOINT, REAR WASHER HOSE, NO.1						
8411-8504	BJ60			85355-87201-	1	515	554
8008-8411	BJ60,FJ60			85355-10060-	1	455	514
8504-8604	BJ60,FJ60			85355-87201-	1	555	572
8411-8504	FJ60			85355-10060-	1	515	554
8604-	FJ60			85355-89122-	1	573	
8510-	HJ60				1		
	85348S JOINT, REAR WASHER ELBOW						
8411-8504	BJ60	NO.2		# 85355-20070- (85355-14481-)	1	515	554
8411-8504	BJ60	NO.1		85355-20200-	1	515	554
8504-	BJ60,HJ60,FJ60	NO.2		# 85355-20070- (85355-14481-)	1	555	
8504-	BJ60,HJ60,FJ60	NO.1		85355-20200-	1	555	

PROD.DATE	MODELS	DESCRIPTION	R/P	PART NUMBER	QTY	REV.REF.CODE FROM	REV.REF.CODE UP TO
	85355R VALVE, REAR WASHER HOSE						
8008-	BJ60,HJ60,FJ60			85031-90A00-	1	455	
	85371R HOSE, REAR WASHER (FROM MOTOR TO JOINT OR NOZZLE)						
8008-	BJ60,HJ60,FJ60	*H,L=2300		90446-06292-	1	455	
	85372R HOSE, REAR WASHER (FROM JOINT TO JOINT OR NOZZLE)						
8008-	BJ60,HJ60,FJ60	*H,L=950		90446-06013-	2	455	
	85373R HOSE, REAR WASHER (FROM JOINT TO NOZZLE)						
8008-8411	BJ60,FJ60	*H,L=950		90446-06013-	1	455	514
8411-8504	FJ60	*H,L=950			1	515	554

PROD.DATE	MODELS	DESCRIPTION	R/P	PART NUMBER	QTY	REV.REF.CODE FROM	REV.REF.CODE UP TO

* H, L = Cut hose to length as specified in remarks

FIG.85-05 HEADLAMP CLEANER

(8008-)

MR4-13-0297

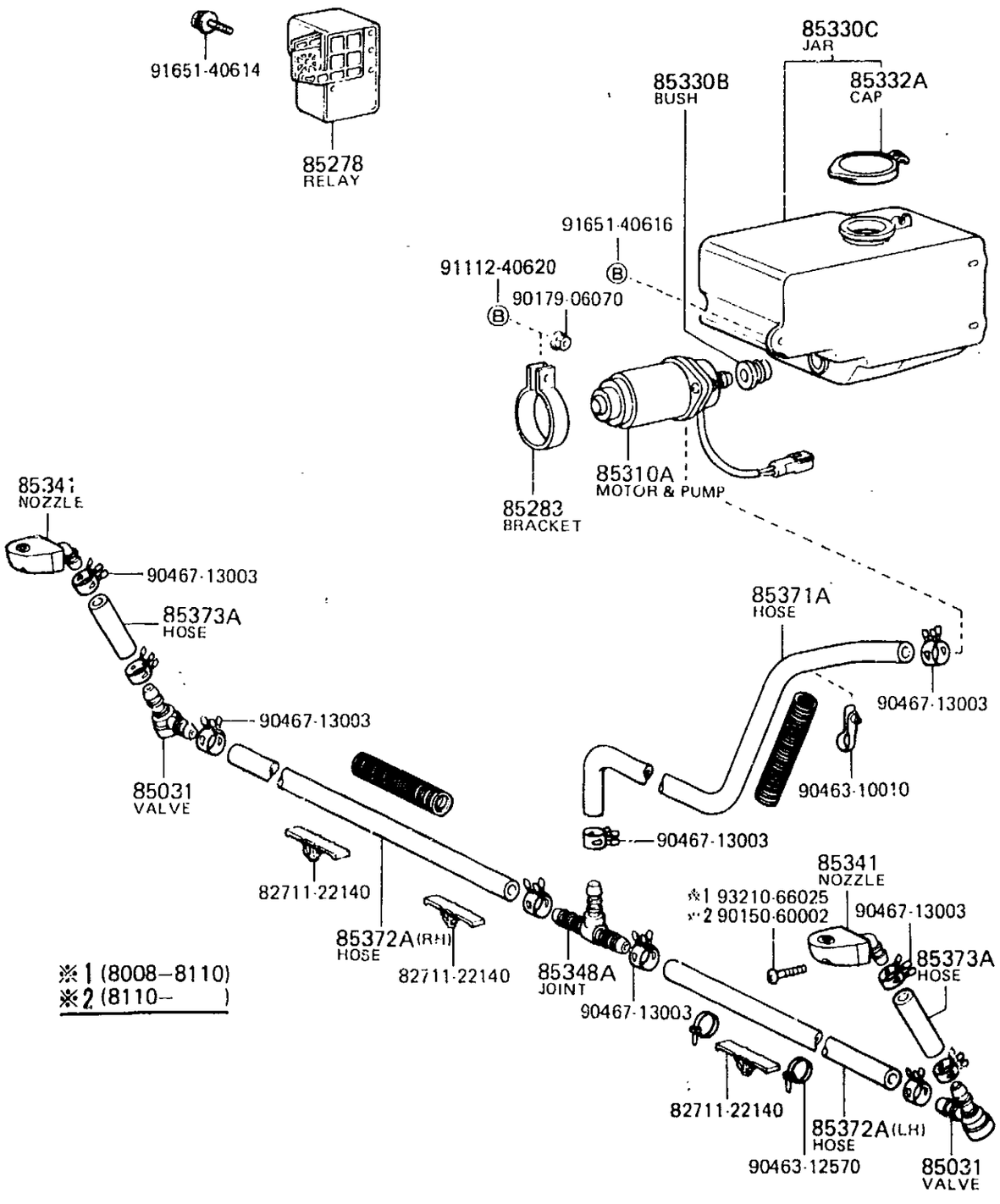

GENUINE TOYOTA PARTS

PROD.DATE	MODELS	DESCRIPTION	R/P	PART NUMBER	QTY	REV.REF.CODE FROM	REV.REF.CODE UP TO
FIG.	85-05 HEADLAMP CLEANER						
	85031	VALVE, HEADLAMP CLEANER WASHER HOSE					
8008-8110	BJ60,FJ60			85031-30020-	2	455	458
8110-	FJ60				2	459	
	85278	RELAY ASSY, HEADLAMP CLEANER CONTROL					
8008-8110	BJ60,FJ60			85276-14010-	1	455	458
8110-	FJ60				1	459	
	85283	BRACKET, HEADLAMP CLEANER WASHER					
8008-8110	BJ60,FJ60			85361-10070-	1	455	458
8110-	FJ60				1	459	
	85310A	MOTOR AND PUMP ASSY, HEADLAMP CLEANER WASHER					
8008-8110	BJ60,FJ60			85310-10090-	1	455	458
8110-8504	FJ60				1	459	554
8504-	FJ60			85310-22070-	1	555	
	85330B	BUSH, HEADLAMP CLEANER WASHER JAR					
8008-8110	BJ60,FJ60			85336-10010-	1	455	458
8110-	FJ60				1	459	
	85330C	JAR ASSY, HEADLAMP CLEANER WASHER					
8008-8110	BJ60,FJ60			85330-90A04-	1	455	458
8110-	FJ60				1	459	
	85332A	CAP, HEADLAMP CLEANER WASHER JAR					
8008-8110	BJ60,FJ60			85332-90A00-	1	455	458
8110-	FJ60				1	459	
	85341	NOZZLE, HEADLAMP CLEANER WASHER					
8008-8110	BJ60,FJ60			85035-90A00-	2	455	458
8110-	FJ60				2	459	
	85348A	JOINT, HEADLAMP CLEANER HOSE, NO.1					
8008-8110	BJ60,FJ60			85352-12010-	1	455	458

PROD.DATE	MODELS	DESCRIPTION	R/P	PART NUMBER	QTY	REV.REF.CODE FROM	REV.REF.CODE UP TO
	85348A JOINT, HEADLAMP CLEANER HOSE, NO.1 CONTINUED						
8110-	FJ60			85352-12010-	1	459	
	85371A HOSE, HEADLAMP CLEANER (FROM MOTOR TO JOINT OR NOZZLE)						
8008-8110	BJ60,FJ60			85271-90A00-	1	455	458
8110-	FJ60				1	459	
	85372A HOSE, HEADLAMP CLEANER (FROM JOINT TO JOINT OR NOZZLE)						
8008-8110	BJ60,FJ60	*H,L=410,LH		85375-22061-	1	455	458
8008-8110	BJ60,FJ60	*H,L=815,RH		90445-14072-	1	455	458
8110-	FJ60	*H,L=410,LH		85375-22061-	1	459	
8110-	FJ60	*H,L=815,RH		90445-14072-	1	459	
	85373A HOSE, HEADLAMP CLEANER WASHER (FROM JOINT TO NOZZLE)						
8008-8110	BJ60,FJ60	L=60		90445-14055-	2	455	458
8110-	FJ60	L=60			2	459	

PROD.DATE	MODELS	DESCRIPTION	R/P	PART NUMBER	QTY	REV.REF.CODE FROM	REV.REF.CODE UP TO

* H, L = Cut hose to length as specified in remarks

(8008-8110)

(8008-)

AM & AM/FM

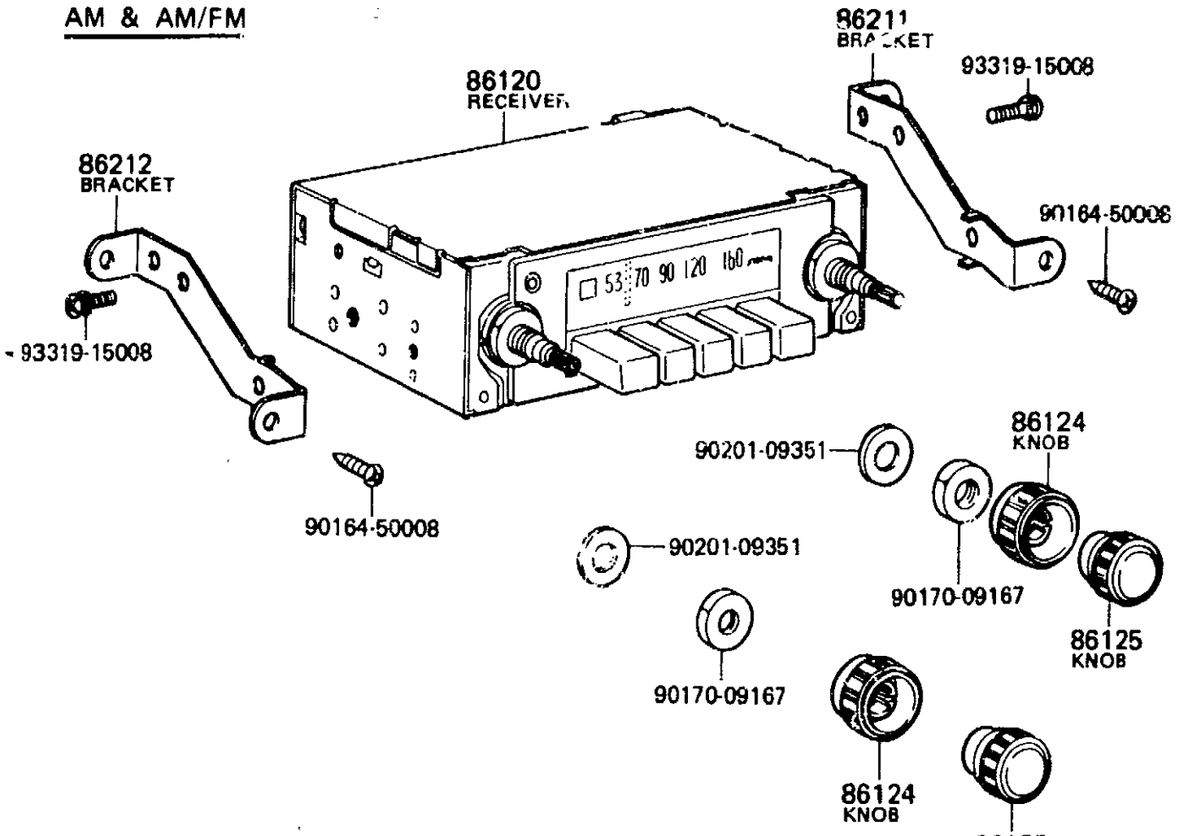

Ignition Coil

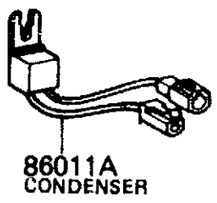

Voltage Regulator

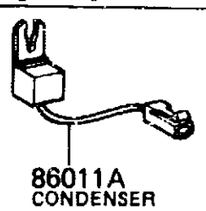

ME 9150 B

AM/FM MULTIPLEX

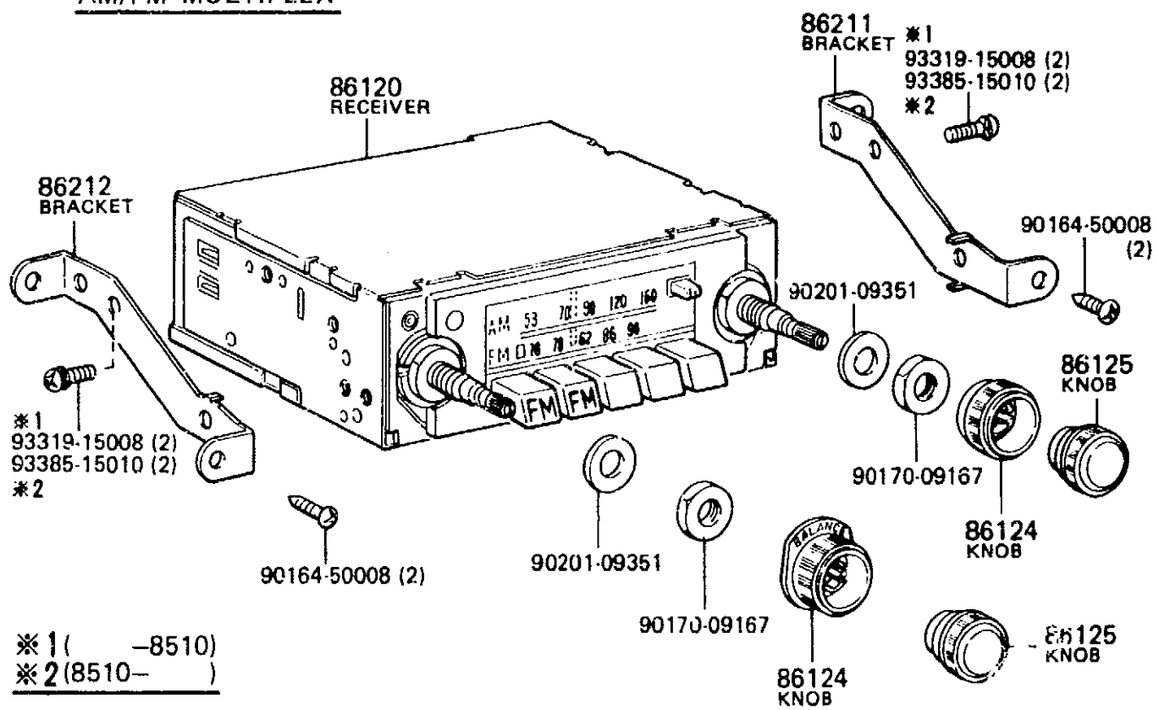

※1(-8510)
※2(8510-)

Ignition Coil

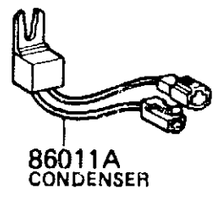

Voltage Regulator

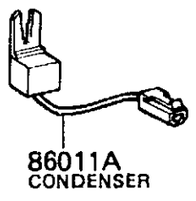

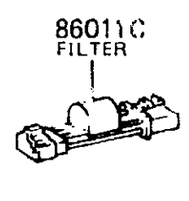

(8510-)

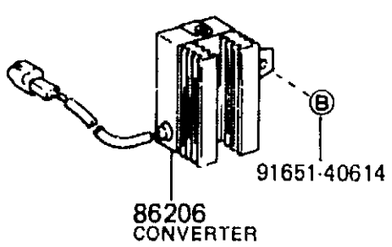

ME 9010-F

FIG.86-01 RADIO & TAPE PLAYER

(8008-)

TAPE PLAYER

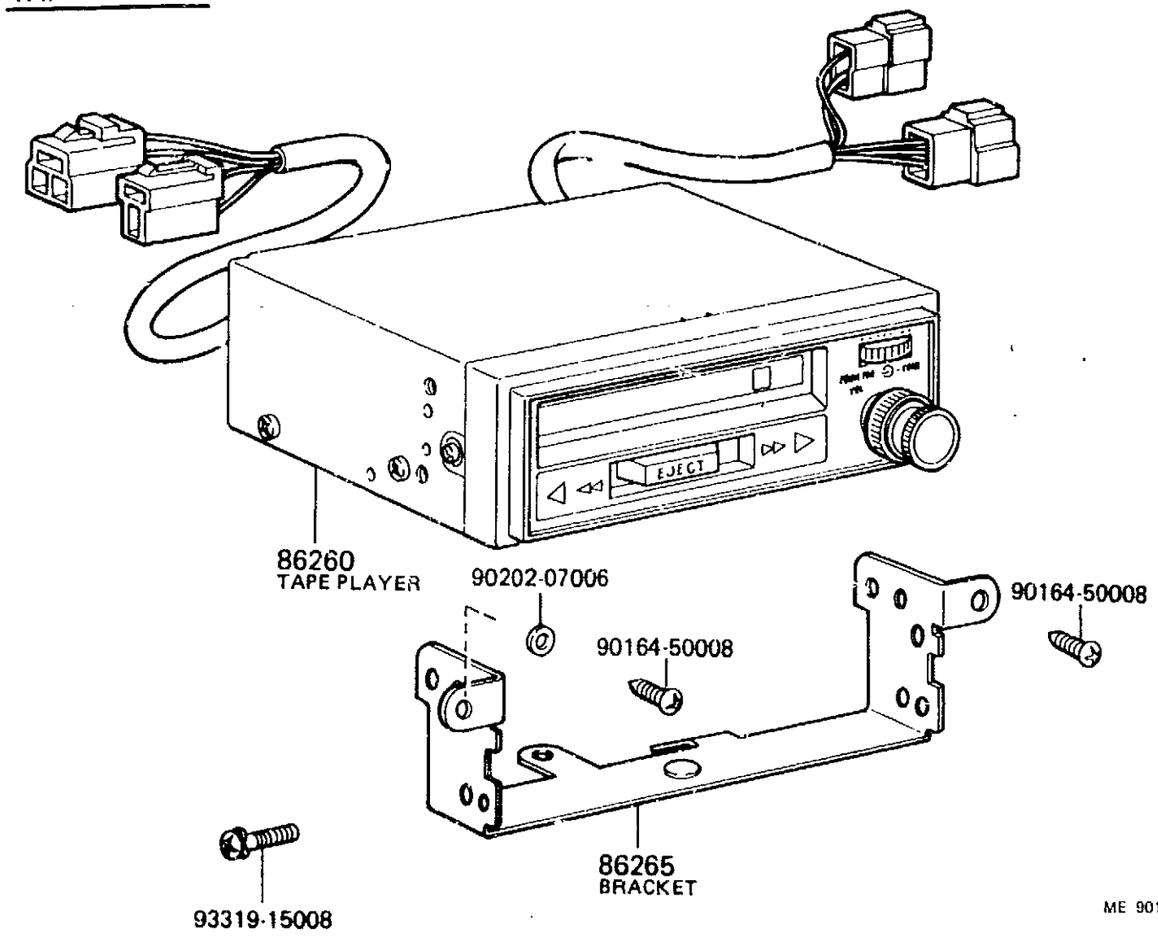

GENUINE TOYOTA PARTS

PROD.DATE	MODELS	DESCRIPTION	R/P	PART NUMBER	QTY	REV.REF.CODE FROM	REV.REF.CODE UP TO
FIG.	86-01 RADIO & TAPE PLAYER						
	86011A CONDENSER, RADIO SETTING						
8008-8604	BJ60,FJ60	VOLTAGE REGULATOR		90980-04040-	1	455	572
8008-8604	FJ60	IGNITION COIL		90980-04038-	1	455	572
	86011C FILTER, NOISE						
8205-	BJ60,HJ60,FJ60	AM/FM MULTIPLEX		90980-05052-	1	467	
	86120 RECEIVER ASSY, RADIO						
8008-8210	BJ60*,FJ60..USA	AM/FM MULTIPLEX	#	86120-90A05- (86120-89118-)	1	455	
8210-	BJ60,HJ60,FJ60	AM/FM MULTIPLEX		86120-89118-	1		
8008-8110	FJ60..CND	AM		86120-90A00-	1	455	458
8008-8110	FJ60..CND	AM/FM		86120-90A04-	1	455	458
	86124 KNOB, RADIO RECEIVER CONTROL						
8008-	BJ60*,FJ60..USA	AM/FM MULTIPLEX(BALANCE)		86124-20050-	1	455	
8008-	BJ60,FJ60			86124-20040-	2	455	
8510-	HJ60	AM/FM MULTIPLEX(TONE)			1	567	
8510-	HJ60	AM/FM MULTIPLEX(BALANCE)		86124-20050-	1	567	
	86125 KNOB, RADIO RECEIVER SWITCH						
8008-	BJ60,HJ60,FJ60			86125-20040-	2	455	
	86206 CONVERTER SUB-ASSY, VOLTAGE						
8510-	HJ60			86206-90A03-	1	567	
	86211 BRACKET, RADIO, NO.1						
8008-	BJ60,HJ60,FJ60			86211-90A00-	1	455	

PROD.DATE	MODELS	DESCRIPTION	R/P	PART NUMBER	QTY	REV.REF.CODE FROM	REV.REF.CODE UP TO
	86212 BRACKET, RADIO, NO.2						
8008-	BJ60,HJ60,FJ60			86212-90A00-	1	455	
	86260 TAPE PLAYER ASSY						
8008-	BJ60,HJ60,FJ60			86260-90A00-	1	455	
	86265 BRACKET, TAPE PLAYER, NO.1						
8008-8202	BJ60,FJ60			# 86265-90A01- (86265-90A00-)	1	455	
8202-	BJ60,HJ60,FJ60			86265-90A00-	1		

GENUINE TOYOTA PARTS

PROD.DATE	MODELS	DESCRIPTION	R/P	PART NUMBER	QTY	REV.REF.CODE FROM	REV.REF.CODE UP TO

GENUINE TOYOTA PARTS

(8008-)

AM & AM/FM

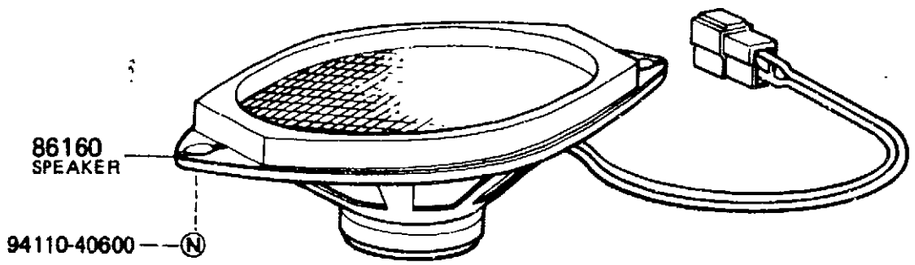

AM/FM MULTIPLEX OR TAPE PLAYER

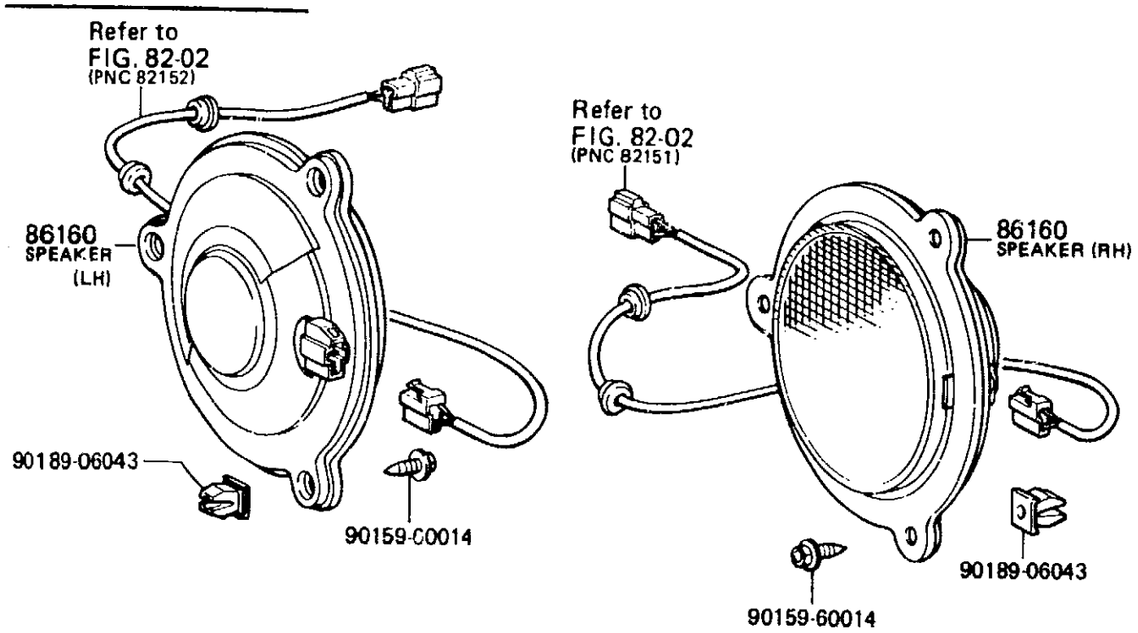

ME A488-B

PROD.DATE	MODELS	DESCRIPTION	R/F	PART NUMBER	QTY	REV.REF.CODE FROM	REV.REF.CODE UP TO
FIG.	86-02 SPEAKER						
86160	SPEAKER ASSY, FRONT NO.1						
8008-8604	BJ60*,FJ60..USA	*19 OR TAPE PLAYER,RH		86160-22060-	1	455	572
8008-8604	BJ60*,FJ60..USA	*19 OR TAPE PLAYER,LH		86160-22070-	1	455	572
8604-	FJ60	*19 OR TAPE PLAYER,RH		86160-90A01-	1	573	
8604-	FJ60	*19 OR TAPE PLAYER,LH		86160-90A02-	1	573	
8008-8110	FJ60..CND			86160-90A00-	1	455	458
8510-	HJ60	*19 OR TAPE PLAYER,RH		86160-90A01-	1	567	
8510-	HJ60	*19 OR TAPE PLAYER,LH		86160-90A02-	1	567	

*19=AM/FM Multiplex (2 Speakers)

FIG.86-04 ANTENNA

GENUINE TOYOTA PARTS

(8008-)

Manual Type

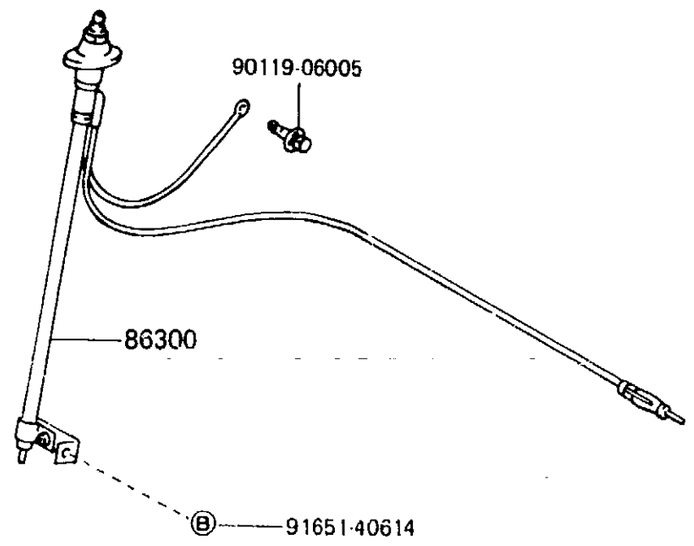

Motor Type

(8008-8404)

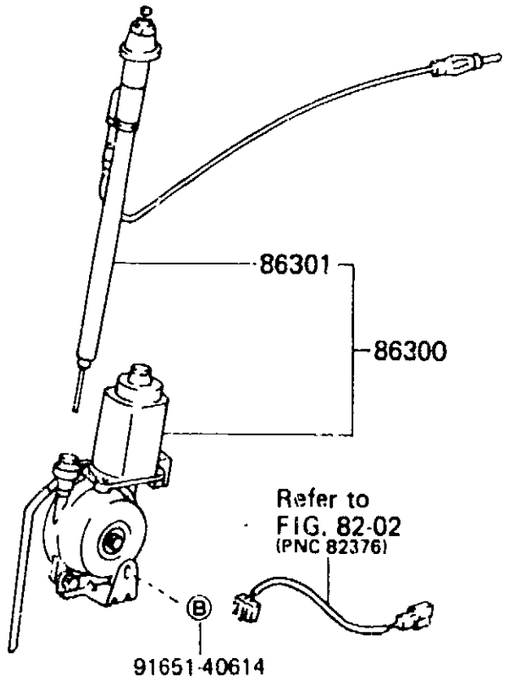

(8404-)

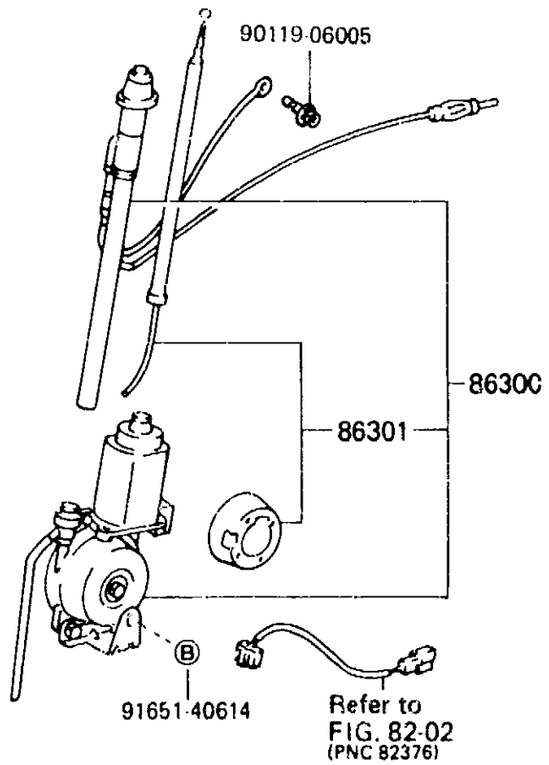

ME 9012-G

PROD.DATE	MODELS	DESCRIPTION	R/P	PART NUMBER	QTY	REV.REF.CODE FROM	REV.REF.CODE UP TO
FIG.	86-04 ANTENNA						
	86300 ANTENNA ASSY, W/HOLDER						
8411-8504	BJ60			86300-90A12-	1	515	554
8008-8411	BJ60,FJ60		#	86300-90A07- (86300-90A12-)	1	455	514
8504-	BJ60,HJ60,FJ60			86300-90A12-	1	555	
8411-8504	FJ60		#	86300-90A07- (86300-90A12-)	1	515	554
8504-8603	FJ60	W/MOTOR DRIVE ANTENNA	#	86300-90A14- (86300-90A17-)	1	555	
8603-	FJ60	W/MOTOR DRIVE ANTENNA		86300-90A17-	1		
8008-8504	FJ60..USA	W/MOTOR DRIVE ANTENNA		86300-90A09-	1	455	554
	86301 POLE SUB-ASSY, ANTENNA						
8008-8404	FJ60..USA	W/MOTOR DRIVE ANTENNA	#	86301-90A09- (86353-14330-)	1	455	
8404-	FJ60..USA	W/MOTOR DRIVE ANTENNA		86353-14330-	1		

FIG.86-11 HORN

4-M4

MR4-13-0301

GENUINE TOYOTA PARTS

(8008-)

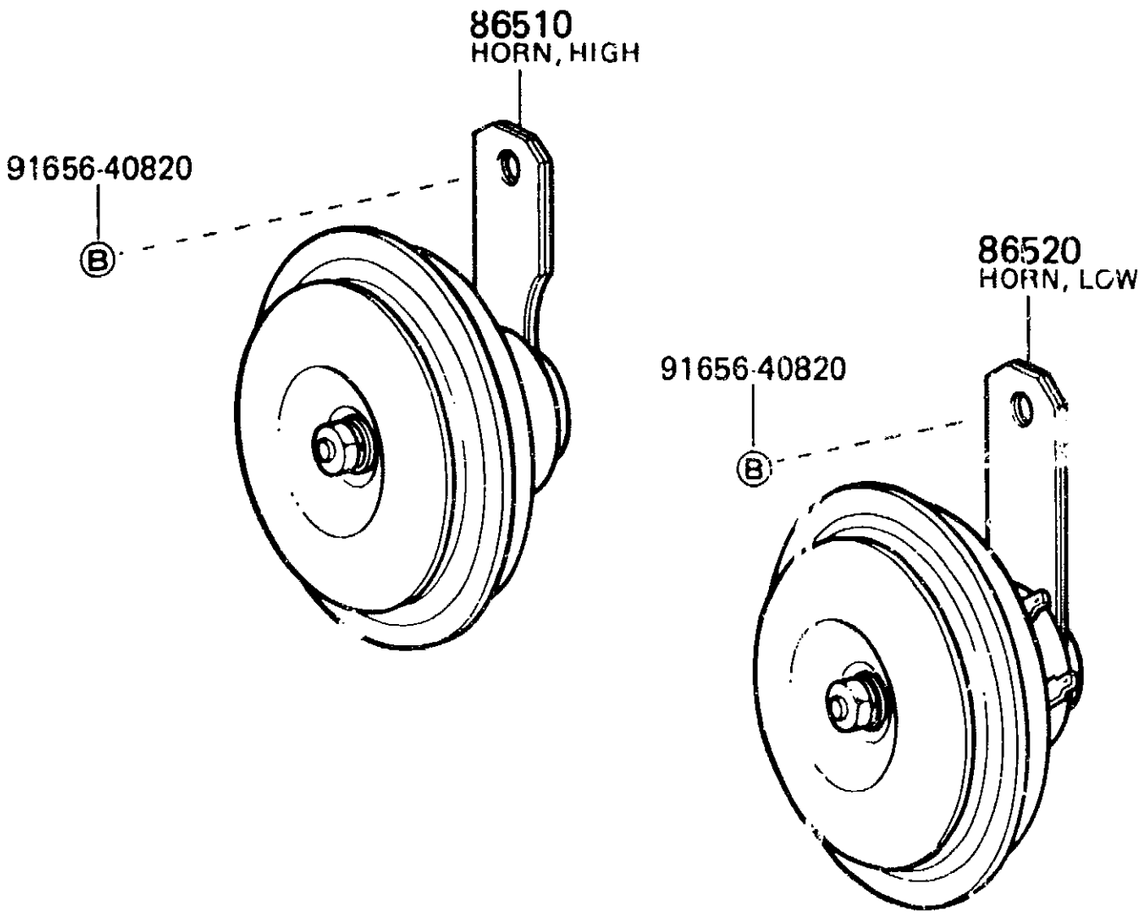

ME 9013-A

PROD.DATE	MODELS	DESCRIPTION	R/P	PART NUMBER	QTY	REV.REF.CODE FROM	REV.REF.CODE UP TO
FIG.	86-11 HORN						
	86510	HORN ASSY, HIGH PITCHED					
8008-8604	BJ60,FJ60			86510-90A01-	1	455	572
8604-	FJ60			86510-22120-	1	573	
8510-	HJ60			86510-90K05-	1	567	
	86520	HORN ASSY, LOW PITCHED					
8008-8604	BJ60,FJ60			86520-90A01-	1	455	572
8604-	FJ60			86520-22120-	1	573	
8510-	HJ60			86520-90K05-	1	567	

FIG•87-01 MIRROR

4-A5

MR4-13-0302

GENUINE TOYOTA PARTS

(8008-)

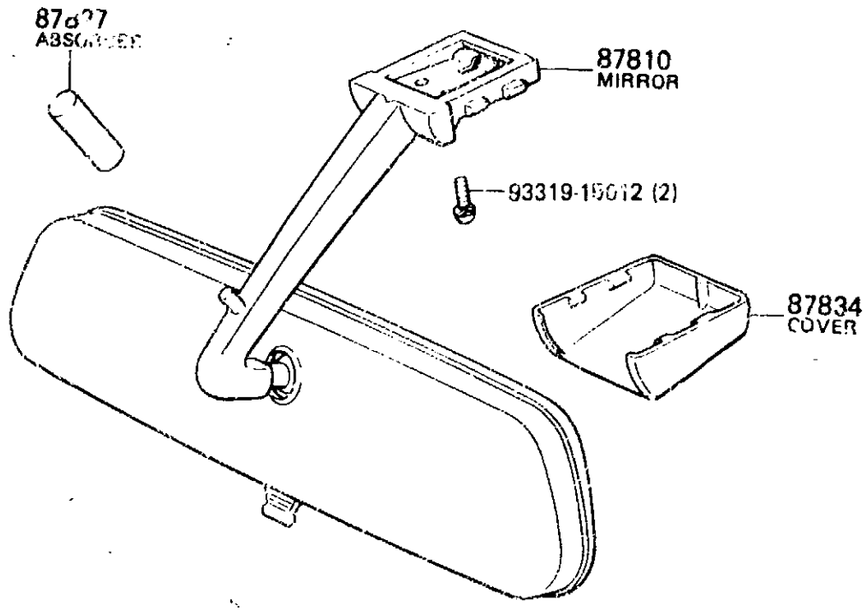

BJ60, FJ60

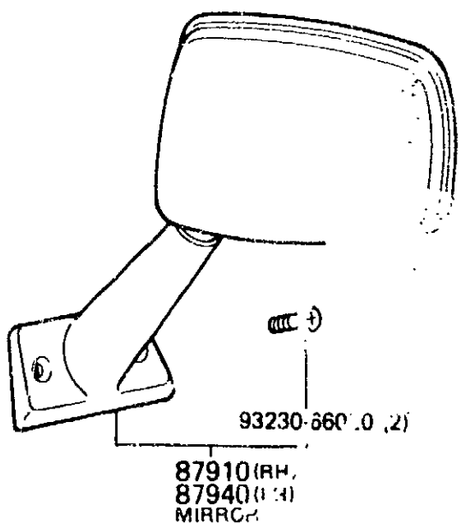

HJ60

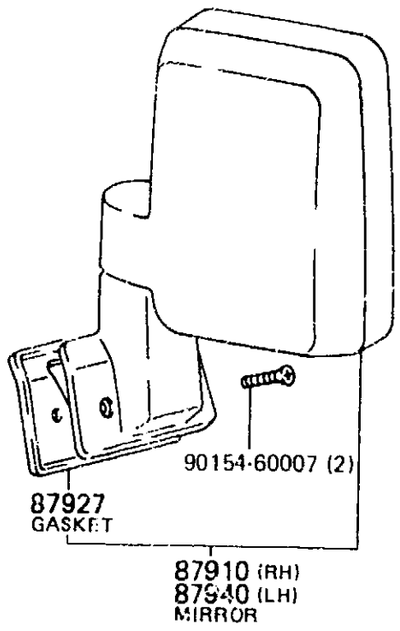

ME 9155-D

	PROD.DATE	MODELS	DESCRIPTION	R/P	PART NUMBER	QTY	REV.REF.CODE FROM	REV.REF.CODE UP TO
	FIG•	87-01 MIRROR						
		87810	MIRROR ASSY, INNER REAR VIEW					
	8008-	BJ60,HJ60,FJ60			87810-90A03-	1	455	
		87827	ABSORBER, INNER REAR VIEW MIRROR					
	8008-	BJ60,HJ60,FJ60	L=40		87828-90A00-	1	455	
	8008-	BJ60,HJ60,FJ60	L=45		87828-90A01-	1	455	
		87834	COVER, INNER REAR VIEW MIRROR STAY HOLDER					
	8008-	BJ60,HJ60,FJ60	IVORY		87834-14011-18	1	455	
		87910	MIRROR ASSY, OUTER REAR VIEW, RH					
C	8008-8512	BJ60,FJ60		#	87910-69015-	1	455	
					(87910-90A00-)			
C	8512-	FJ60			87910-90A00-	1		
	8510-	HJ60			87910-90A08-	1	567	
	8510-	HJ60	MHROME PLATED		87910-90A10-	1	567	
		87927	PACKING, REAR VIEW OUTSIDE MIRROR STAY					
C	8510-8608	HJ60			87911-90A04-	2	567	600
C	8608-	HJ60			87911-90A05-	2	601	
		87940	MIRROR ASSY, OUTER REAR VIEW, LH					
C	8008-8512	BJ60,FJ60			87940-69015-	1	455	
C	8512-	FJ60			87940-90A00-	1		
	8510-	HJ60			87940-90A07-	1	567	
	8510-	HJ60	MHROME PLATED		87940-90A09-	1	567	

(8008-8504)

(8008-8604)

87100
HEATER & ACCESSORY

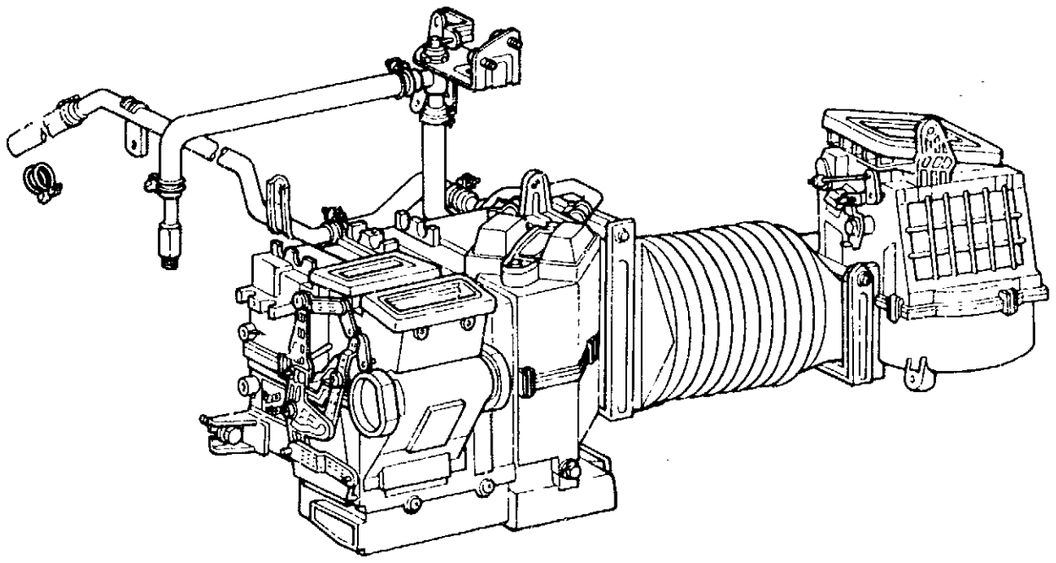

87200
HEATER & ACCESSORY

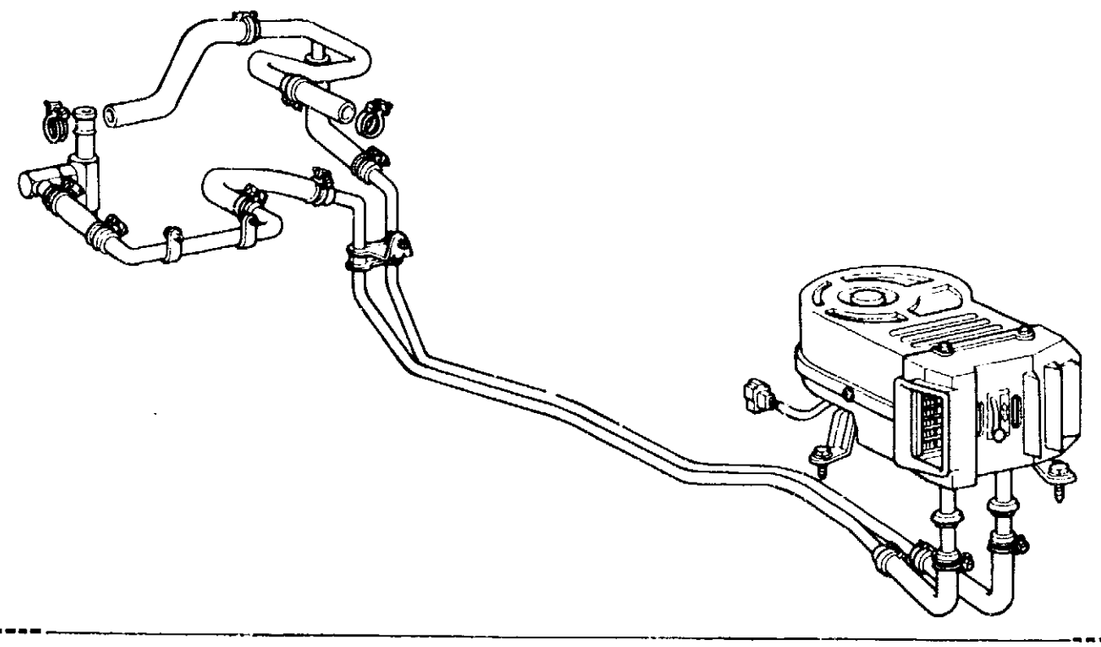

ME 9018

88300
COOLER & ACCESSORY

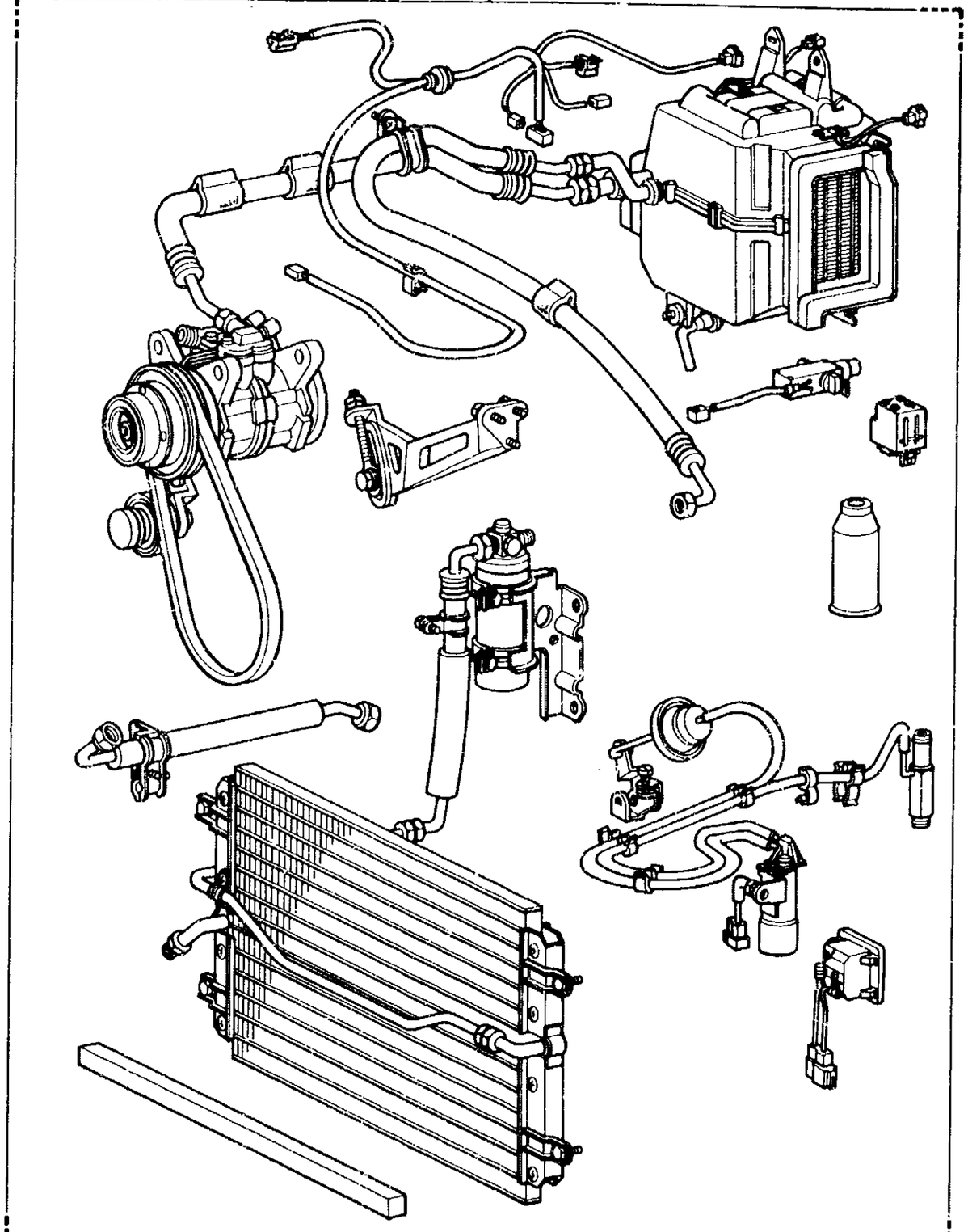

ME 9460

FIG.87-11 **GENUINE TOYOTA PARTS** **4-C5** **GENUINE TOYOTA PARTS**

PROD.DATE	MODELS	DESCRIPTION	R/P	PART NUMBER	QTY	REV.REF.CODE FROM	REV.REF.CODE UP TO
FIG.	87-11 HEATING & AIR CONDITIONING - SET						
	87100 HEATER AND ACCESSORY ASSY						
8008-8411	BJ60			87100-90A07-	1	455	514
8008-8504	FJ60			87100-90A01-	1	455	554
	87200 HEATER AND ACCESSORY, REAR						
8008-8110	BJ60			87200-90A01-	1	455	458
8110-8210	BJ60			87200-90A05-	1	459	466
8210-8411	BJ60			87200-90A08-	1	467	514
8008-8210	FJ60			87200-90A00-	1	455	466
8210-8504	FJ60			87200-90A07-	1	467	554
	88300 COOLER AND ACCESSORY ASSY						
8504-8604	FJ60			88300-90A82-	1	555	572
8008-8504	FJ60••USA			88300-90A11-	1	455	554

PROD.DATE	MODELS	DESCRIPTION	R/P	PART NUMBER	QTY	REV.REF.CODE FROM	REV.REF.CODE UP TO

FIG.87-12 HEATING & AIR CONDITIONING - HEATER UNIT & BLOWER

4-D5

(8008-)

Front Heater

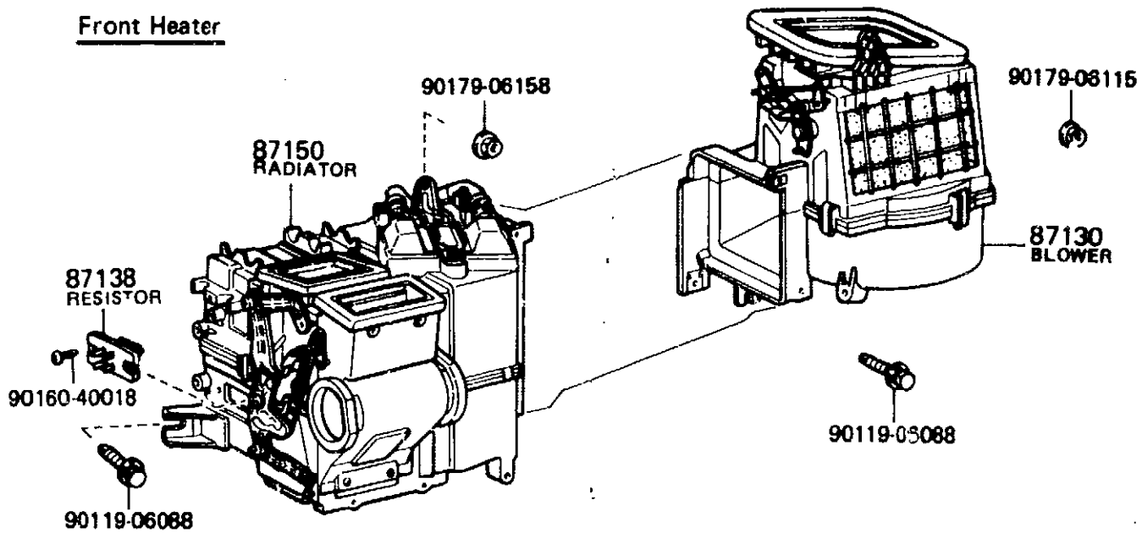

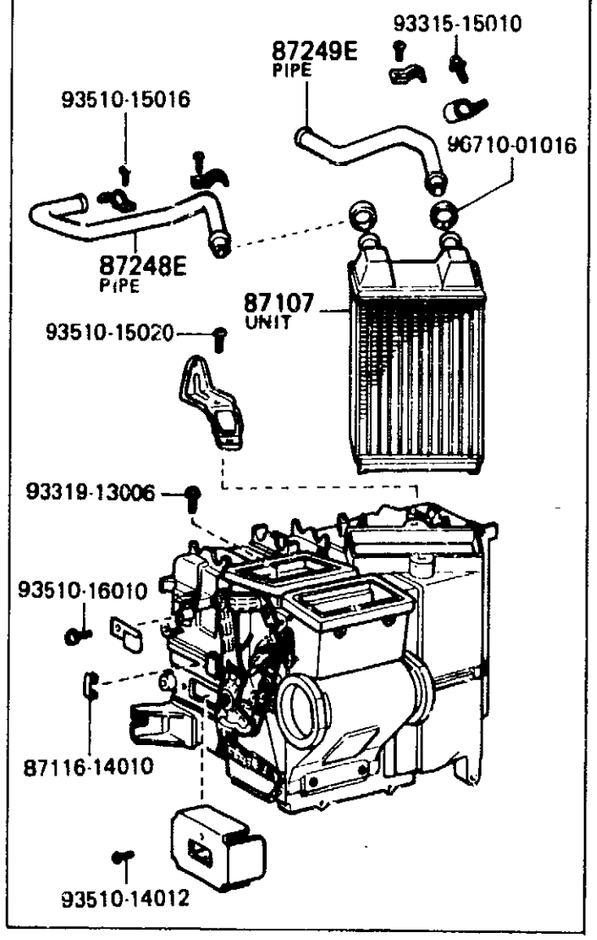

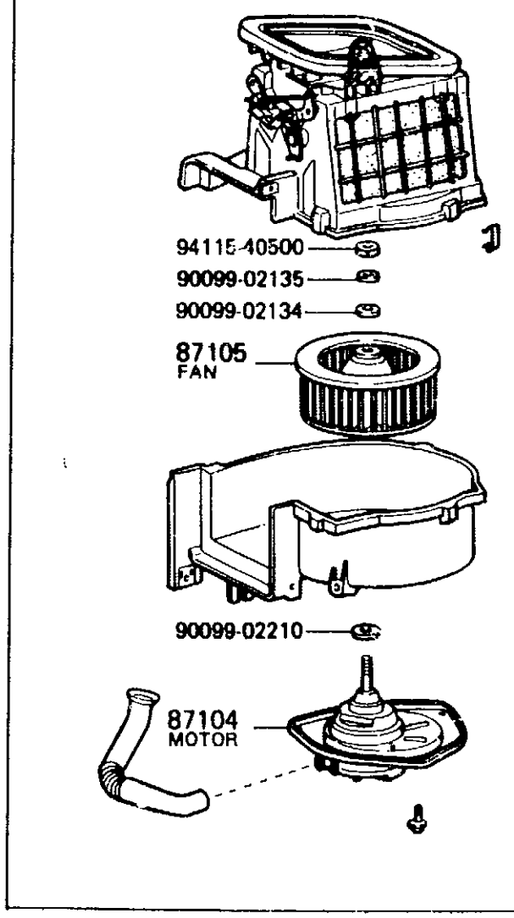

ME 9022-C

(8008-)

Rear Heater

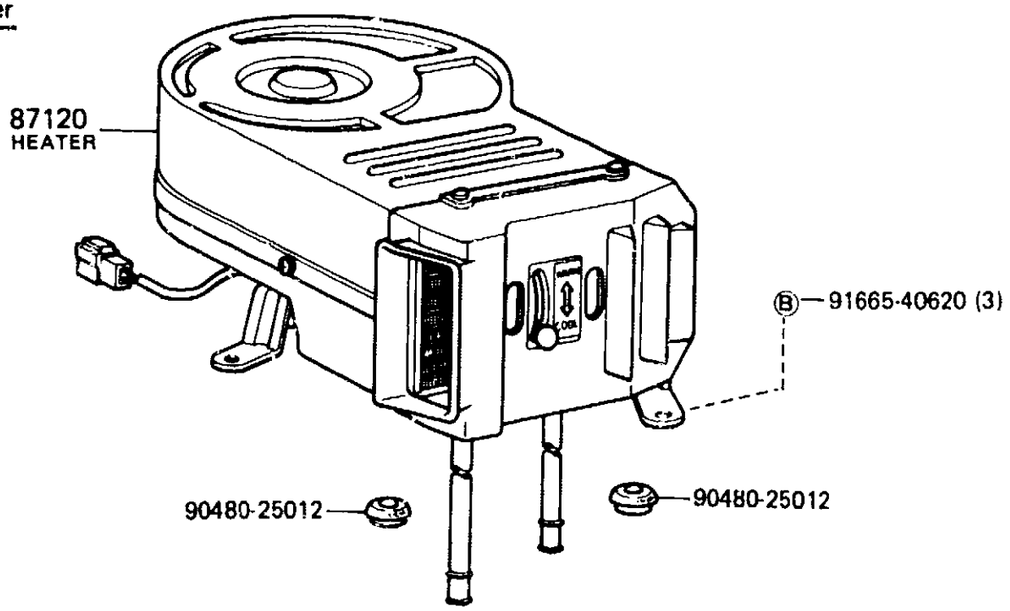

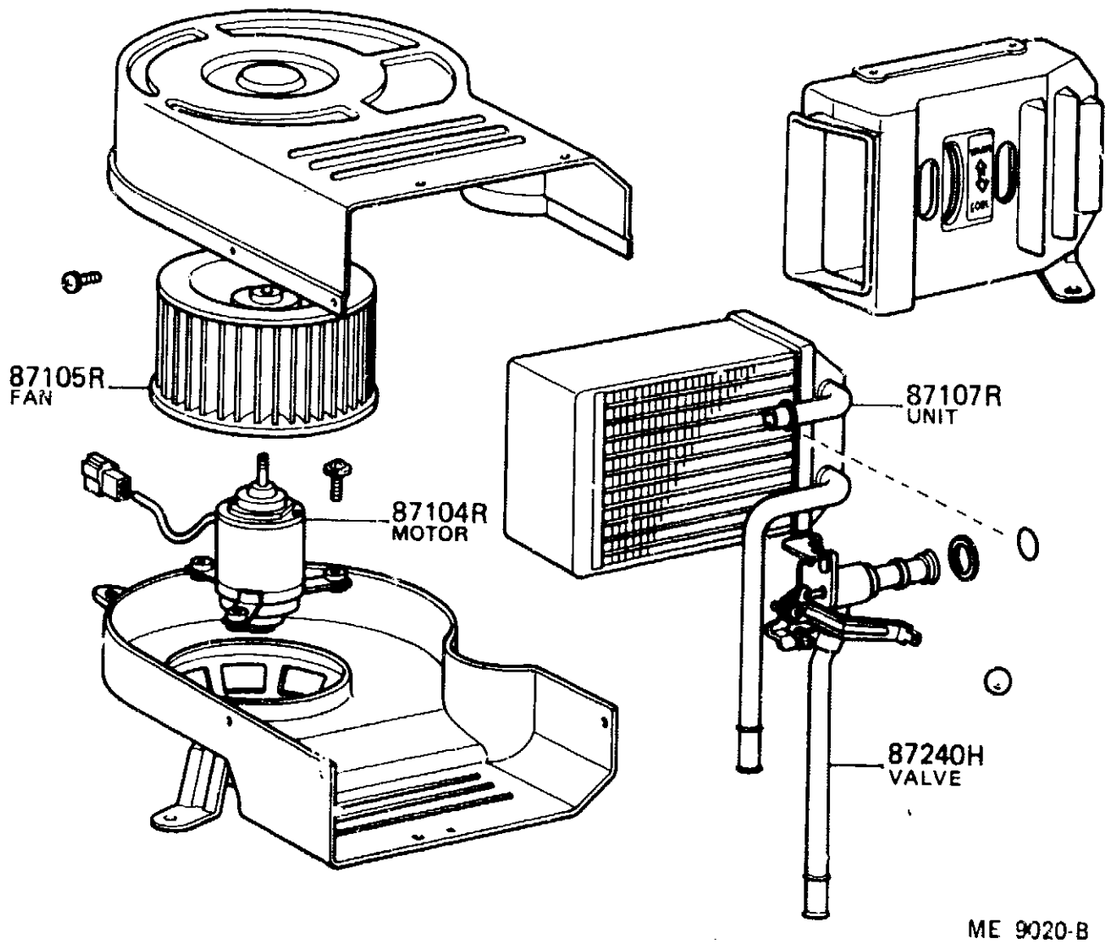

ME 9020-B

FIG.87-12 HEATING & AIR CONDITIONING - HEATER UNIT & BLOWER

4-E5

MR4-13-0303

(8510-)

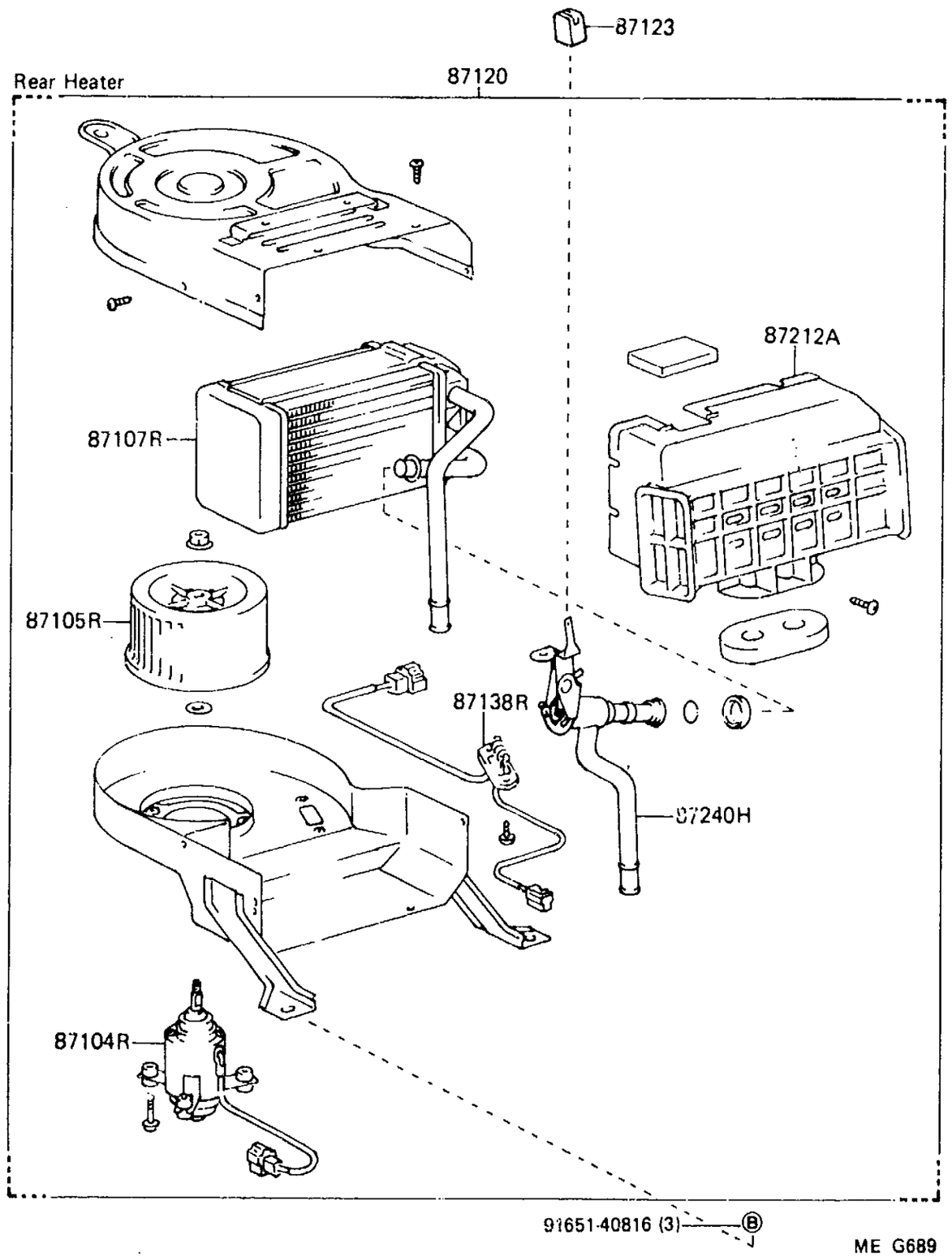

GENUINE TOYOTA PARTS

PROD.DATE	MODELS	DESCRIPTION	R/P	PART NUMBER	QTY	REV.REF.CODE FROM	REV.REF.CODE UP TO
FIG.	87-12 HEATING & AIR CONDITIONING - HEATER UNIT & BLOWER						
	87104 MOTOR SUB-ASSY, HEATER BLOWER						
8008-	BJ60,FJ60			87104-90A00-	1	455	
8510-	HJ60			87104-90A06-	1	567	
	87104R MOTOR SUB-ASSY, REAR HEATER BLOWER						
8008-	BJ60,FJ60			87104-87003-	1	455	
8510-	HJ60			87104-90K04-	1	567	
	87105 FAN SUB-ASSY, HEATER BLOWER						
8008-	BJ60,HJ60,FJ60			87105-14020-	1	455	
	87105R FAN SUB-ASSY, REAR HEATER BLOWER						
8008-	BJ60,HJ60,FJ60			87105-87002-	1	455	
	87107 UNIT SUB-ASSY, RADIATOR HEATER						
8008-	BJ60,HJ60,FJ60			87107-90A00-	1	455	
	87107R UNIT SUB-ASSY, REAR HEATER						
8008-	BJ60,FJ60			87107-90A01-	1	455	
8510-	HJ60			87107-90A03-	1	567	
	87120 HEATER ASSY, REAR						
8008-	BJ60,FJ60			87110-90A00-	1	455	
8510-	HJ60			87110-90A03-	1	567	
	87123 KNOB, HEATER						
8510-	HJ60			55905-12070-	1	567	
	87130 BLOWER ASSY, HEATER, FRONT						
8008-	BJ60,FJ60			87130-90A01-	1	455	
8510-	HJ60			87130-90A08-	1	567	
	87138 RESISTOR, HEATER BLOWER						
8008-	BJ60,FJ60			87138-22030-	1	455	
8510-	HJ60			87138-90A00-	1	567	

PROD.DATE	MODELS	DESCRIPTION	R/P	PART NUMBER	QTY	REV.REF.CODE FROM	REV.REF.CODE UP TO
	87138R RESISTOR, REAR HEATER BLOWER						
8510-	HJ60			87138-90K03-	1	567	
	87150 RADIATOR ASSY, HEATER						
8008-8411	BJ60			87150-90A03-	1	455	514
8411-8510	BJ60			87150-90A11-	1	515	566
8008-8504	FJ60			87150-90A01-	1	455	554
8504-	HJ60,FJ60			87150-90A09-	1	555	
	87212A DUCT, AIR, REAR NO.1						
8510-	HJ60			87212-90A00-	1	567	
	87240H VALVE ASSY, WATER UNIT						
8008-	BJ60,FJ60	RR HEATER		87240-90A01-	1	455	
8510-	HJ60	RR HEATER		87240-90A02-	1	567	
	87248E PIPE, HEATER WATER INLET, E (FOR HEATER UNIT)						
8008-	BJ60,HJ60,FJ60			87248-90A01-	1	455	
	87249E PIPE, HEATER WATER OUTLET, E (FOR HEATER UNIT)						
8008-8510	BJ60			87248-90A05-	1	455	566
8008-	HJ60,FJ60			87248-90A03-	1	455	

PROD.DATE	MODELS	DESCRIPTION	R/P	PART NUMBER	QTY	REV.REF.CODE FROM	REV.REF.CODE UP TO

FIG•87-14 HEATING & AIR CONDITIONING - COOLER UNIT

4-G5

(8008-8504)FJ60••USA

(8411-8510)BJ60; (8504-)FJ60; (8510-)HJ60

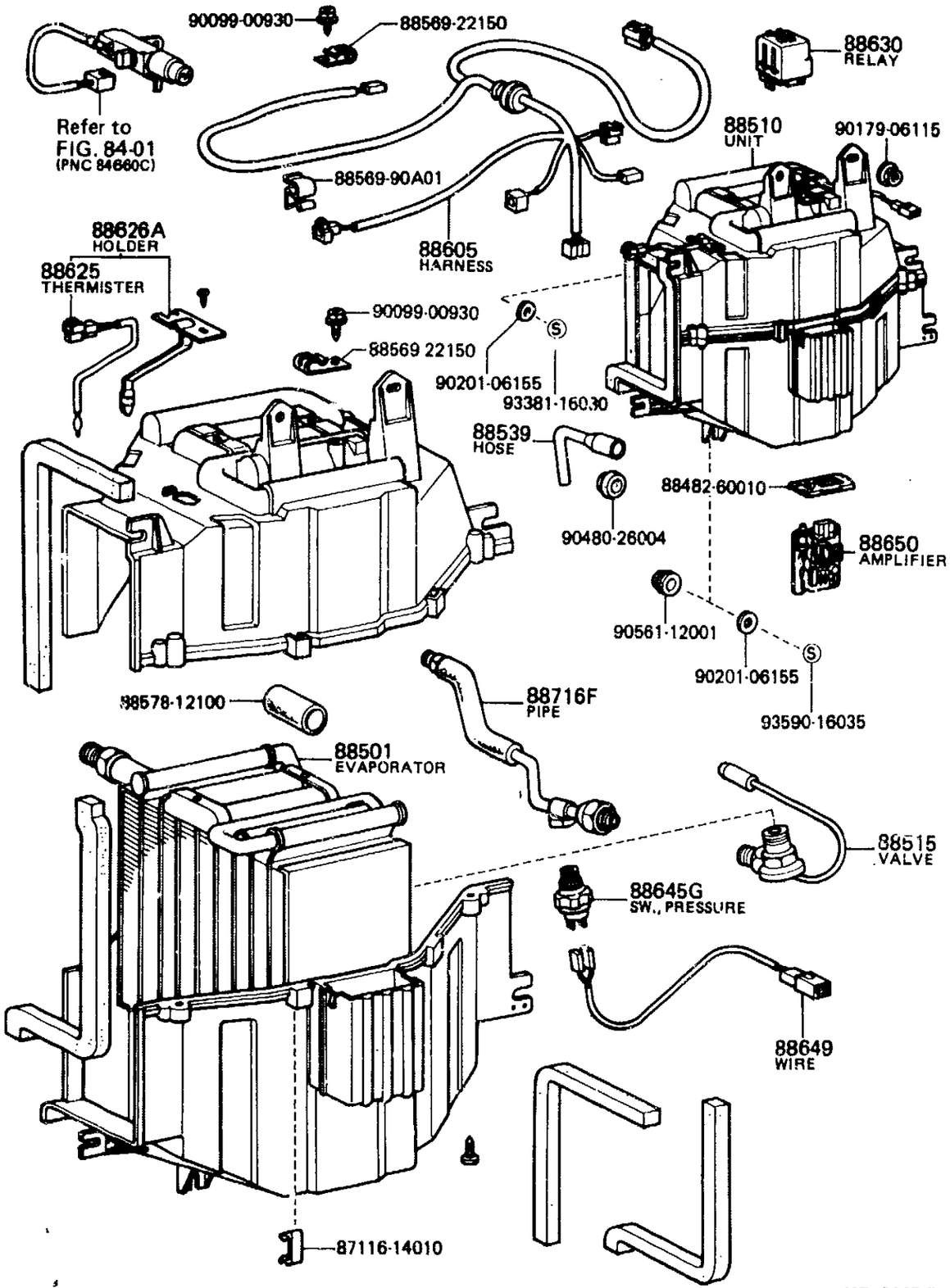

ME 9445-B

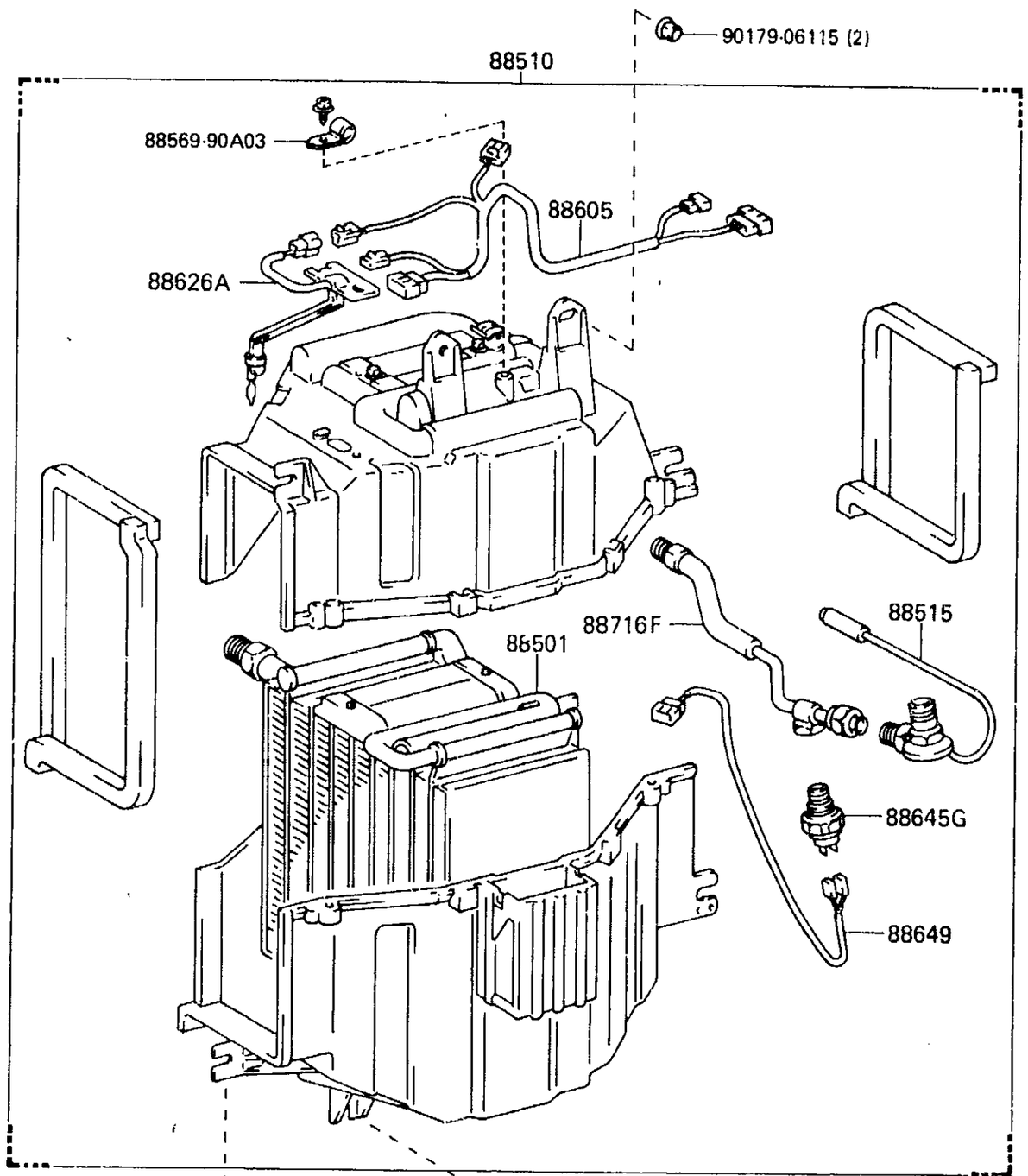

ME F718-B

ME9445B

MEF718B

	PROD.DATE	MODELS	DESCRIPTION	R/P	PART NUMBER	QTY	REV.REF.CODE FROM	REV.REF.CODE UP TO
	FIG.	87-14 HEATING & AIR CONDITIONING - COOLER UNIT						
		88501	EVAPORATOR SUB-ASSY, COOLER, NO.1					
C	8411-8604	BJ60,HJ60			88501-90A03-	1	515	
C	8504-8604	FJ60				1	555	
C	8604-	FJ60			88501-90A07-	1		
	8008-8504	FJ60..USA			88501-90A01-	1	455	554
C	8604-	HJ60			88501-90A07-	1		
		88510	UNIT ASSY, COOLER					
	8411-8510	BJ60			38510-90A13-	1	515	566
	8504-	FJ60			88510-90A04-	1	555	
	8008-8504	FJ60..USA			88510-90A01-	1	455	554
	8510-	HJ60			88510-90A13-	1	567	
		88515	VALVE, COOLER EXPANSION					
	8411-8510	BJ60			88515-20040-	1	515	566
	8008-8510	FJ60..USA				1	455	566
	8510-	HJ60,FJ60			88515-87004-	1	567	
		88539	HOSE, COOLER UNIT DRAIN, NO.1					
	8411-	BJ60,HJ60			88539-90A00-	1	515	
	8008-	FJ60..USA				1	455	
		88605	HARNESS SUB-ASSY, COOLER WIRING, NO.1					
	8411-	BJ60,HJ60			88605-90A09-	1	515	
	8504-	FJ60				1	555	
	8008-8504	FJ60..USA			83605-90A01-	1	455	554
		88625	THERMISTOR, COOLER, NO.1					
	8008-8504	FJ60..USA			88625-90A00-	1	455	554
		88626A	HOLDER, THERMISTOR					
	8411-	BJ60,HJ60			88626-90A01-	1	515	
	8008-	FJ60..USA				1	455	

	PROD.DATE	MODELS	DESCRIPTION	R/P	PART NUMBER	QTY	REV.REF.CODE FROM	REV.REF.CODE UP TO
		88630	RELAY ASSY, COOLER					
	8008-8504	FJ60..USA			85913-90A01-	1	455	554
		88645G	SWITCH, PRESSURE					
	8411-	BJ60,HJ60			88645-10020-	1	515	
C	8008-8508	FJ60..USA			# 88645-22020- (88645-30250-)	1	455	
C	8508-	FJ60..USA			88645-30250-	1		
		88649	WIRING, COOLER, NO.2					
	8411-	BJ60,HJ60			88648-90A00-	1	515	
	8008-	FJ60..USA				1	455	
		88650	AMPLIFIER ASSY, COOLER STABILIZER					
	8411-8510	BJ60			88650-90A03-	1	515	566
	8504-	FJ60			88650-90A02-	1	555	
	8008-8504	FJ60..USA			88650-60020-	1	455	554
	8510-	HJ60			88650-90A04-	1	567	
		88716F	PIPE, COOLER REFRIGERANT LIQUID, F (FOR COOLER UNIT)					
	8411-	BJ60,HJ60,FJ60			88716-90A27-	1	515	
	8008-8411	FJ60..USA			# 88716-90A05- (88716-90A27-)	1	455	514

FIG.87-15 HEATING & AIR CONDITIONING - CONTROL & AIR DUCT

4-I5

MR4-11-0492

(8008-)

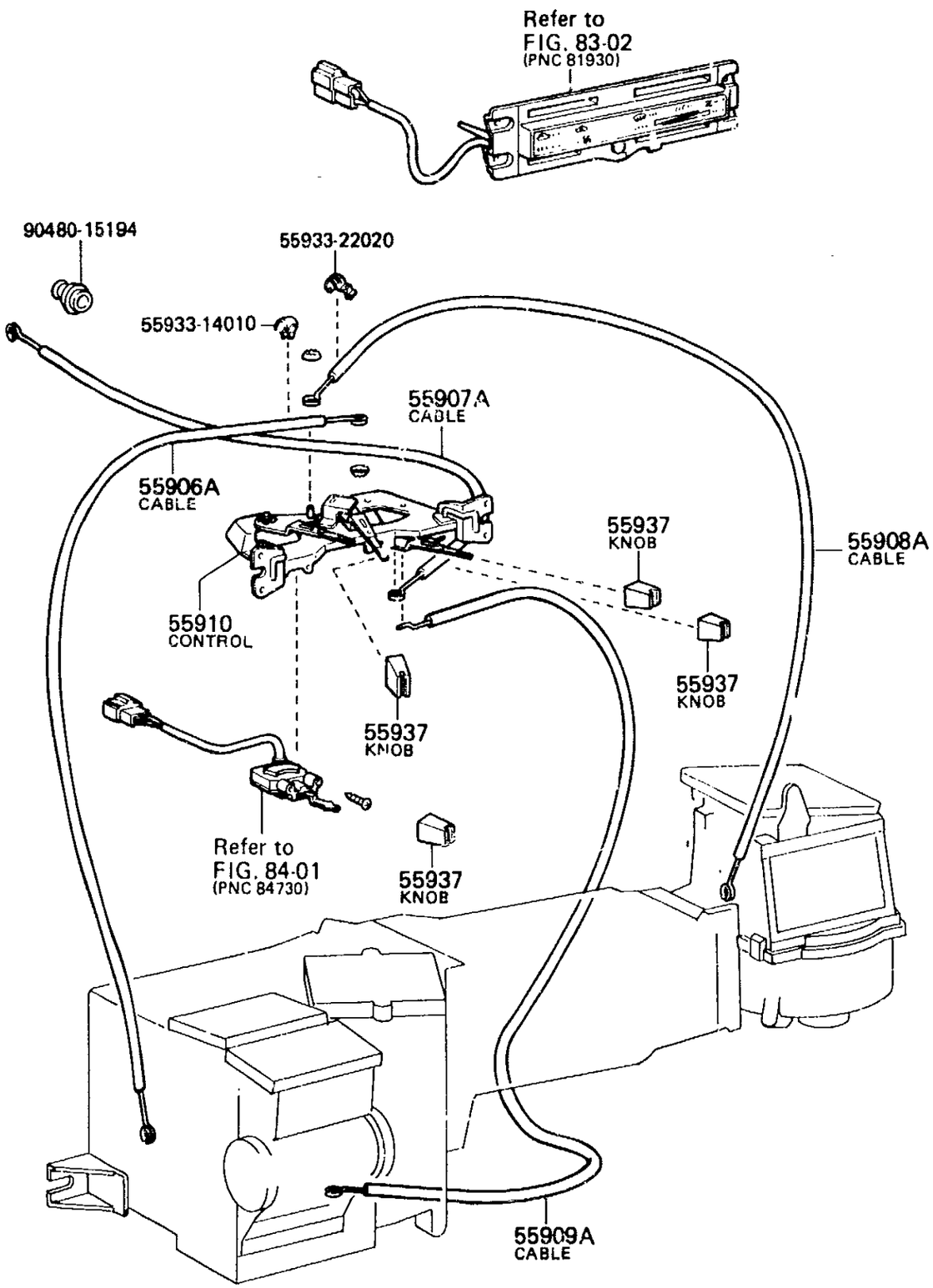

ME 9025-B

(8008-)

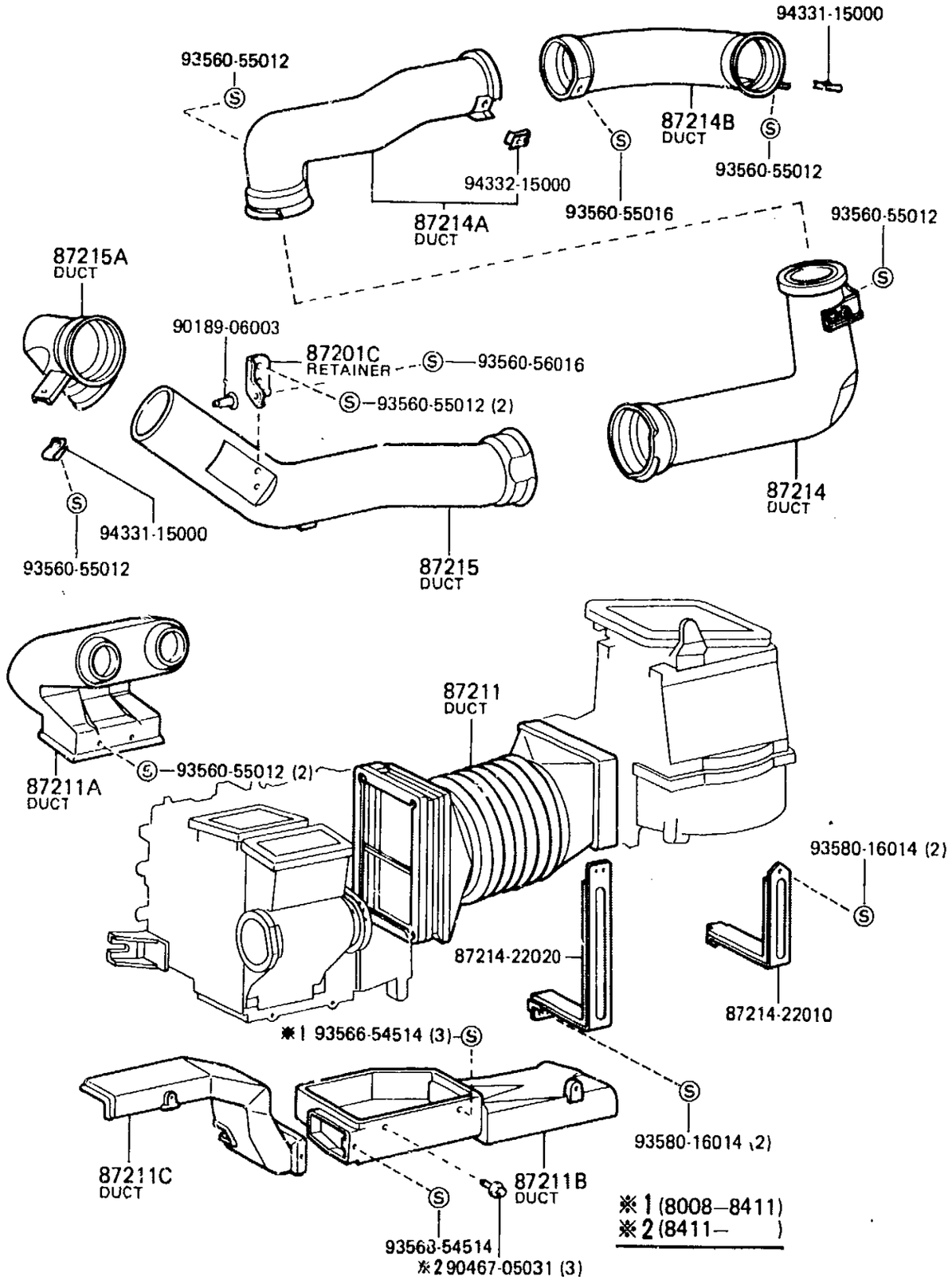

ME 9028-F

PROD.DATE	MODELS	DESCRIPTION	R/P	PART NUMBER	QTY	REV.REF.CODE FROM	REV.REF.CODE UP TO
FIG.	87-15 HEATING & AIR CONDITIONING - CONTROL & AIR DUCT						
	55906A CABLE SUB-ASSY, DEFROSTER DAMPER CONTROL						
8008-	BJ60,HJ60,FJ60	L=350		55905-90A00-	1	455	
	55907A CABLE SUB-ASSY, WATER VALVE CONTROL						
8008-	BJ60,HJ60,FJ60	L=490		87286-90A01-	1	455	
	55908A CABLE SUB-ASSY, AIR INLET DAMPER CONTROL						
8008-	BJ60,HJ60,FJ60	L=880		55908-90A00-	1	455	
	55909A CABLE SUB-ASSY, AIRMIX DAMPER CONTROL						
8008-	BJ60,HJ60,FJ60	L=650		55907-90A00-	1	455	
	55910 CONTROL ASSY, HEATER OR BOOST VENTILATOR						
8008-	BJ60,HJ60,FJ60			55901-90A01-	1	455	
	55937 KNOB, HEATER CONTROL LEVER						
8008-	BJ60,HJ60,FJ60			55905-22050-	4	455	
	87201C RETAINER, AIR DUCT						
8008-	BJ60,HJ60,FJ60			55852-90A01-	1	455	
	87211 DUCT, AIR, NO.1						
8008-	BJ60,HJ60,FJ60			87211-90A01-	1	455	
	87211A DUCT, AIR, NO.2						
8008-	BJ60,HJ60,FJ60			55089-90A01-	1	455	
	87211B DUCT, AIR, NO.3						
8411-8504	BJ60			87201-90A04-	1	515	554
8008-8411	BJ60,FJ60			87201-90A01-	1	455	514
8504-	BJ60,HJ60,FJ60			87201-90A04-	1	555	
8411-8504	FJ60			87201-90A01-	1	515	554
	87211C DUCT, AIR, NO.4						
8008-	BJ60,HJ60,FJ60			87201-90A02-	1	455	

PROD.DATE	MODELS	DESCRIPTION	R/P	PART NUMBER	QTY	REV.REF.CODE FROM	REV.REF.CODE UP TO
	87214 DUCT, AIR, SIDE NO.1	RH					
8008-	BJ60,HJ60,FJ60			55088-90A01-	1	455	
	87214A DUCT, AIR, SIDE NO.2	RH					
8008-	BJ60,HJ60,FJ60			55087-90A01-	1	455	
	87214B DUCT, AIR, SIDE NO.3	RH					
8008-	BJ60,HJ60,FJ60			55086-90A01-	1	455	
	87215 DUCT, AIR, SIDE NO.1	LH					
8008-	BJ60,HJ60,FJ60			55085-90A01-	1	455	
	87215A DUCT, AIR, SIDE NO.2	LH					
8008-	BJ60,HJ60,FJ60			55084-90A01-	1	455	

FIG•87-16 HEATING & AIR CONDITIONING — WATER PIPING

4-K5

MR4-11-0493

(8008-)FJ60,HJ60

(8008-8411)BJ60

ILLUST•NO• 10F2

ILLUST•NO• 10F2

FJ60

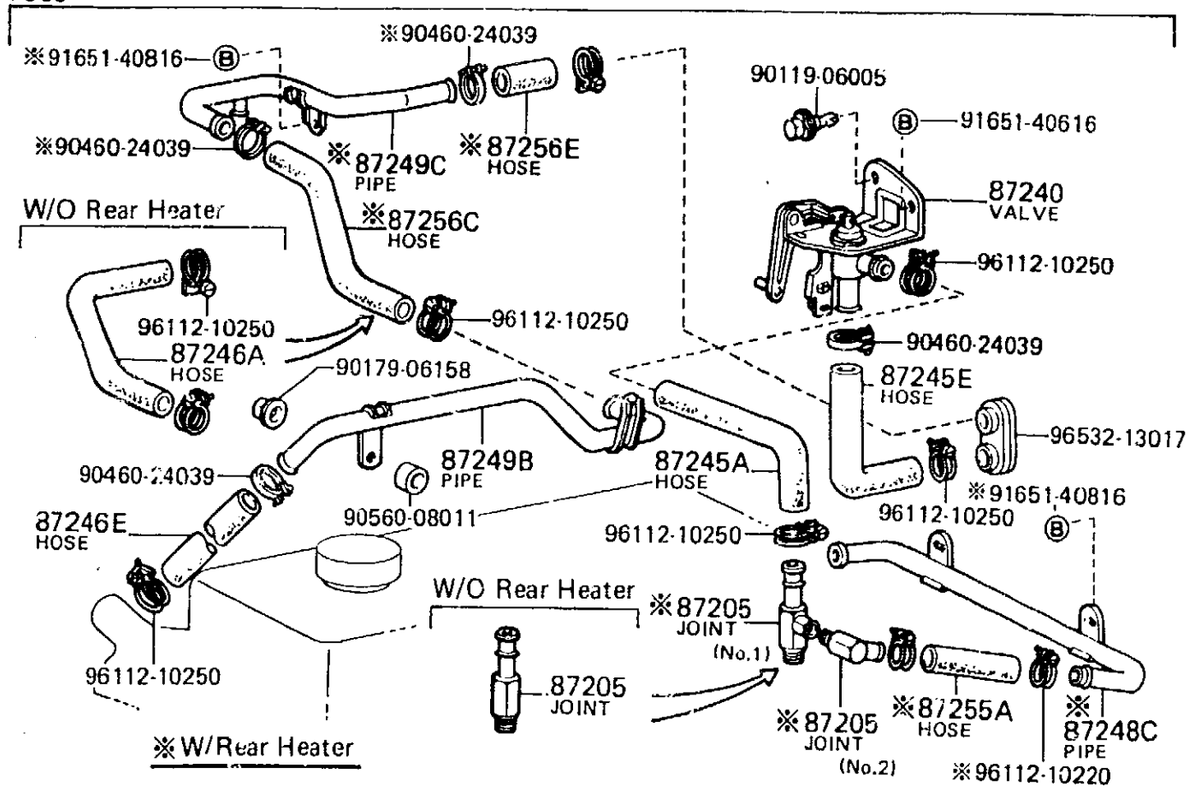

HJ60

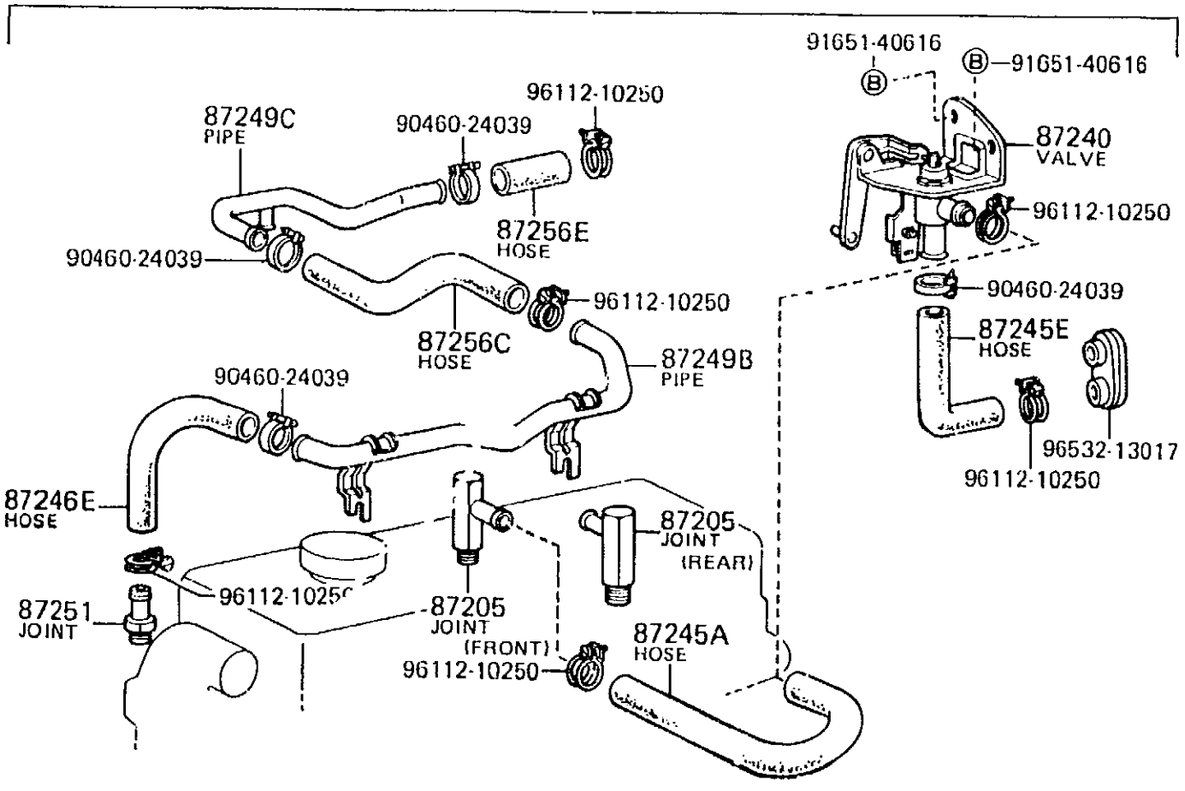

ME 9032-E

(8008-8110)

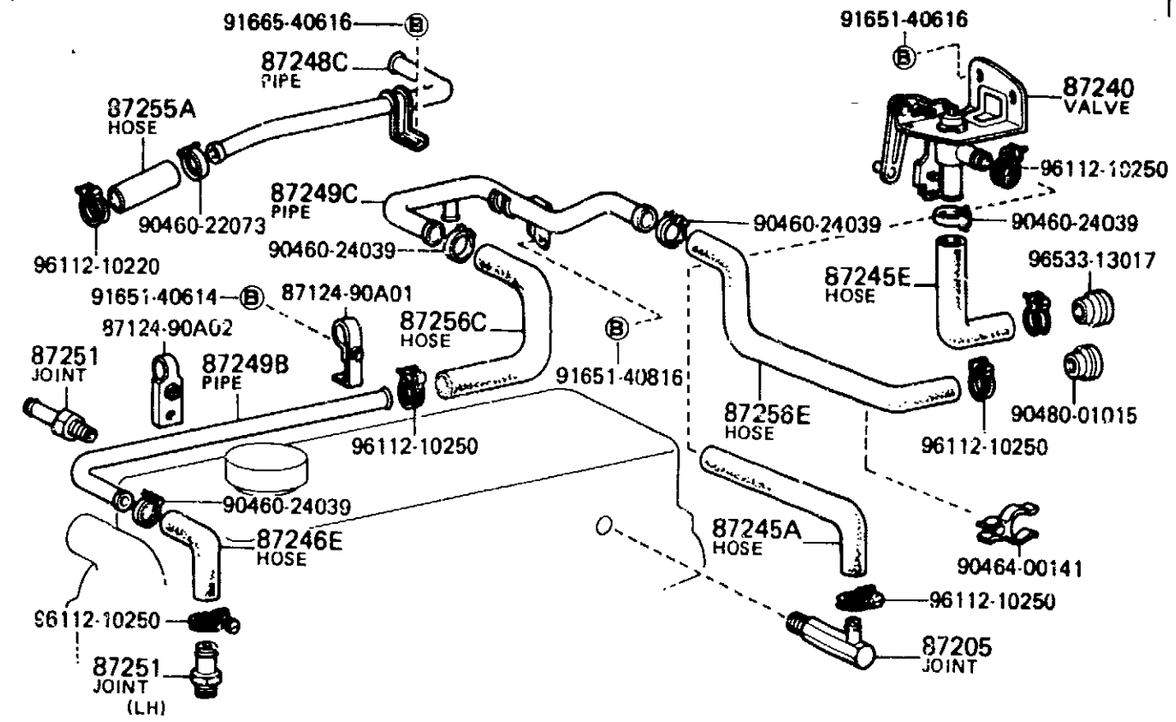

(8110-)

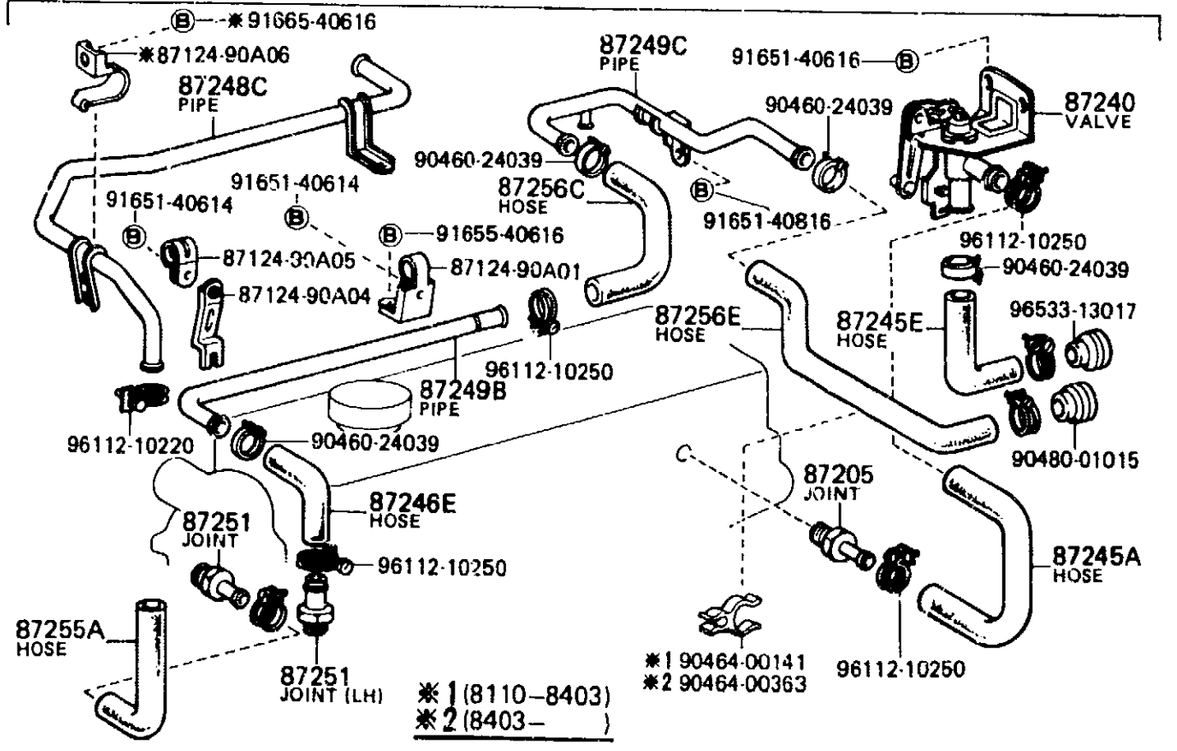

ME 8434-B

FIG•87-16 HEATING & AIR CONDITIONING - WATER PIPING

4-L5

(8411-8510)BJ60

ILLUST•NO• 1OF2

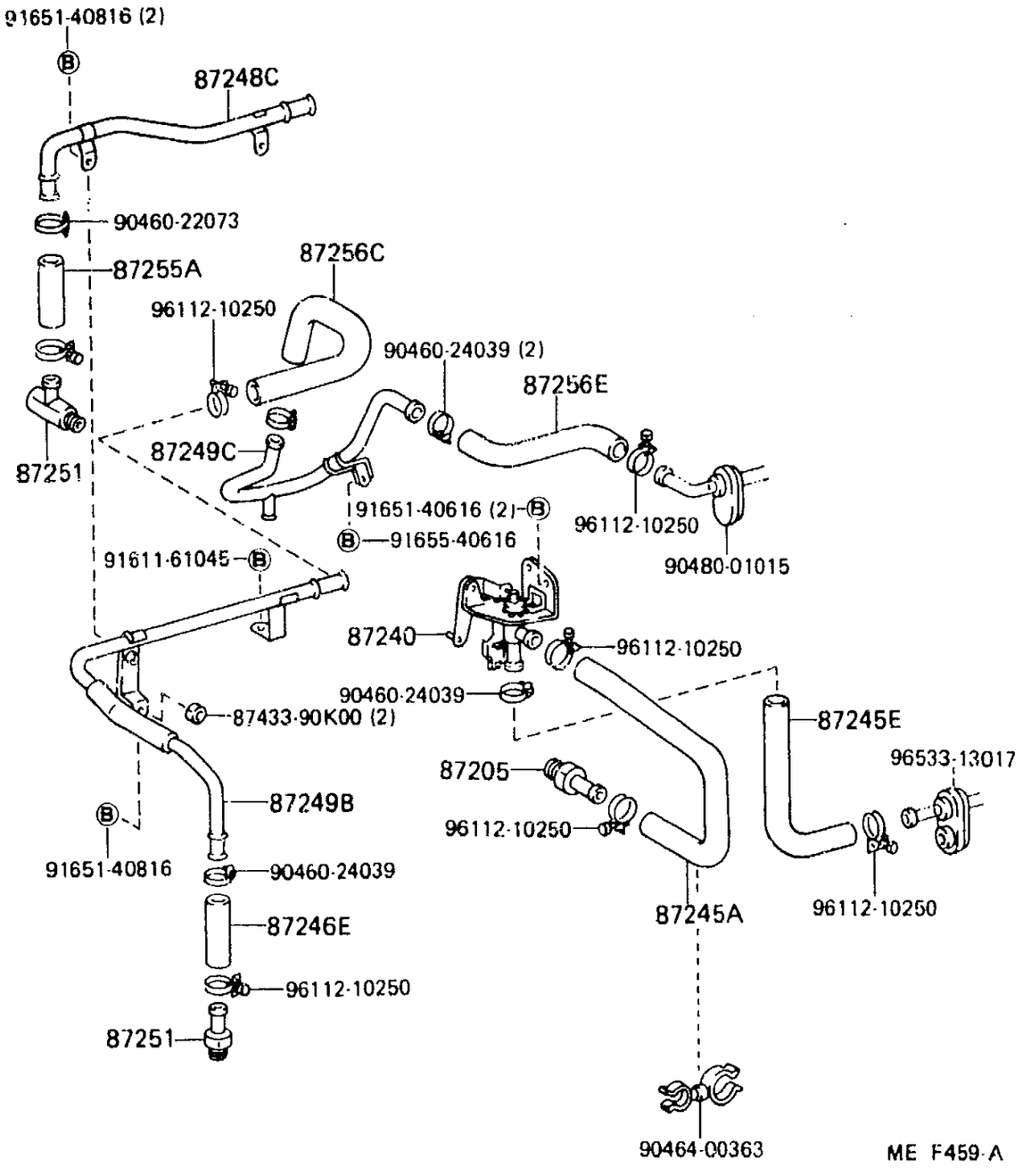

(8008-)BJ60,FJ60

ILLUST•NO• 2OF2

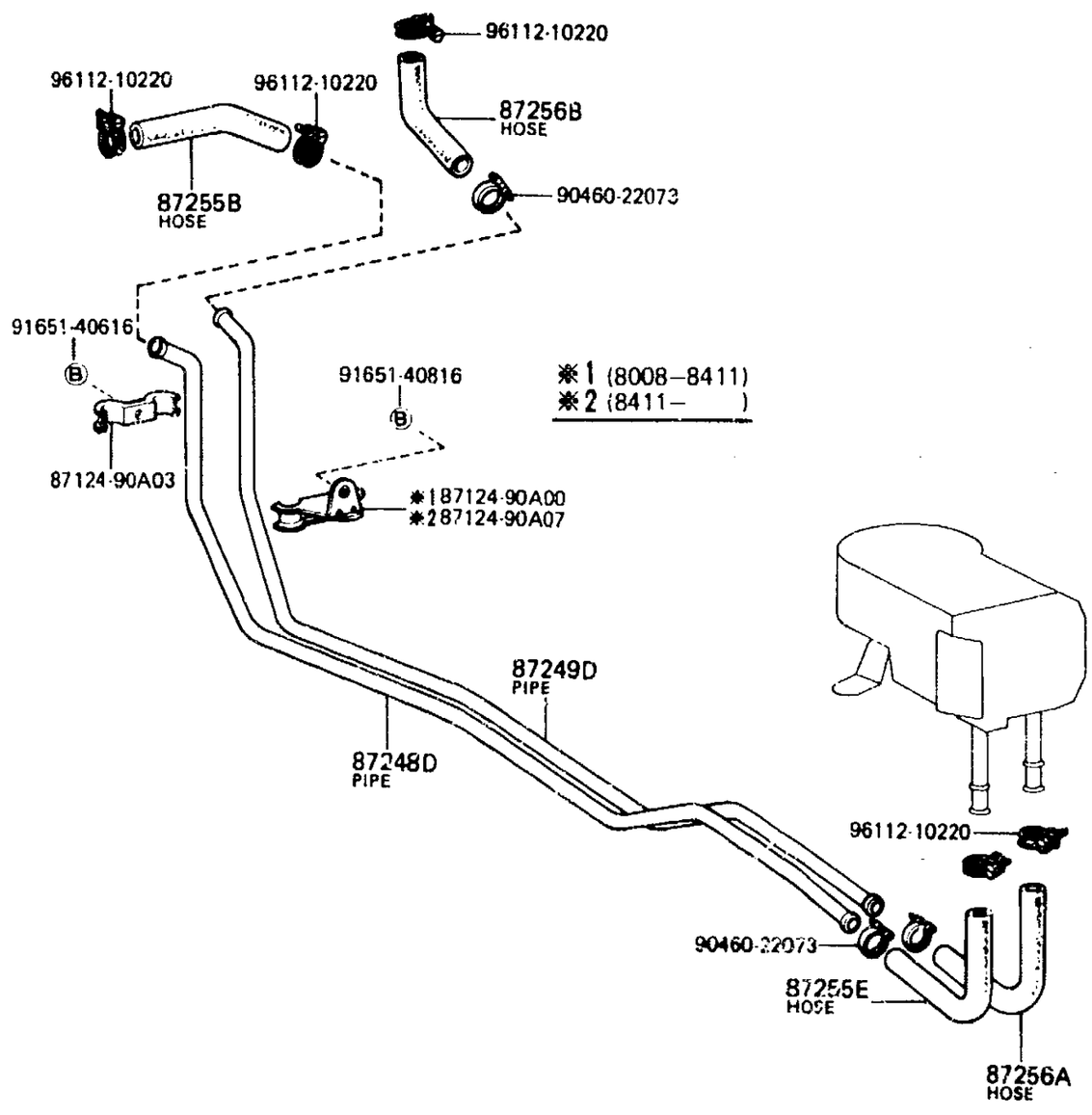

FIG.87-16 HEATING & AIR CONDITIONING - WATER PIPING

4-M5

(8510-)HJ60

ILLUST.NO. 20F2

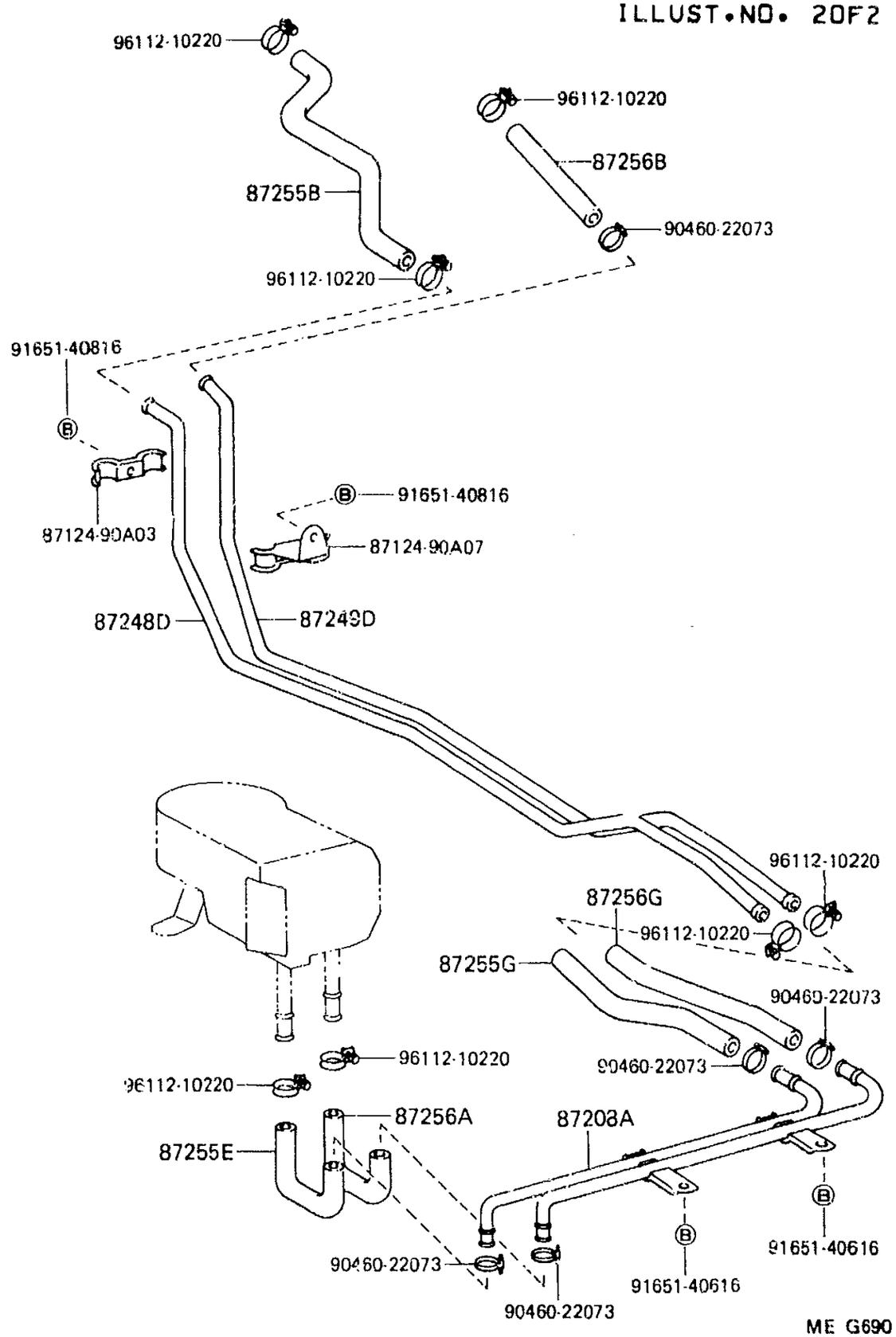

* H, L = Cut hose to length as specified in remarks

GENUINE TOYOTA PARTS

PROD.DATE	MODELS	DESCRIPTION	R/P	PART NUMBER	QTY	REV.REF.CODE FROM	REV.REF.CODE UP TO
FIG.	87-16 HEATING & AIR CONDITIONING - WATER PIPING						
	87205 JOINT OR UNION, FRONT HEATER HOSE THROUGH OR INLET VALVE						
8008-8510	BJ60			87251-30200-	1	455	566
8008-	FJ60	W/RR HEATER NO.1		87251-90A01-	1	455	
8008-	FJ60	W/RR HEATER NO.2		87251-90A02-	1	455	
8504-	FJ60	W/O RR HEATER		87251-90A00-	1	555	
8008-8110	FJ60..USA				1	455	458
8510-	HJ60	RR HEATER		87251-90A05-	1	567	
8510-	HJ60	FR HEATER		87251-95400-	1	567	
	87208A PIPE SUB-ASSY, HEATER WATER, A						
8510-	HJ60			87208-90A11-	1	567	
	87240 VALVE ASSY, HEATER WATER						
8008-	BJ60,HJ60,FJ60			87240-90A00-	1	455	
	87245A HOSE, HEATER WATER INLET, A (FROM ENGINE)						
8008-8510	BJ60			87245-90A18-	1	455	566
8008-	FJ60			87245-90A01-	1	455	
8510-	HJ60			99556-30500-	1	567	
	87245E HOSE, HEATER WATER INLET, E (TO HEATER UNIT)						
8008-	BJ60,HJ60,FJ60			87245-90A00-	1	455	
	87246A HOSE, HEATER WATER OUTLET, A (FROM HEATER UNIT)						
8504-	FJ60			87245-90A02-	1	555	
8008-8110	FJ60..USA				1	455	458
	87246E HOSE, HEATER WATER OUTLET, E (TO ENGINE)						
8008-8309	BJ60			# 87247-20051- (87245-30331-)	1	455	
8309-8411	BJ60			87245-90A26-	1		514
8411-8510	BJ60	L=55		99556-30055-	1	515	566
8008-8309	FJ60	*H, L=320		99552-30500-	1	455	

	PROD.DATE	MODELS	DESCRIPTION	R/P	PART NUMBER	QTY	REV.REF.CODE FROM	REV.REF.CODE UP TO
		87246E | HOSE, HEATER WATER OUTLET, E (TO ENGINE) CONTINUED						
C	8309-8508	FJ60	L=320		99556-30320-	1		
	8504-	FJ60	L=210,W/COOLER		99556-30210-	1	555	
C	8508-	FJ60	L=320		99556-30500-	1		
	8008-8504	FJ60••USA	*H,L=210,W/COOLER		99552-30300-	1	455	554
	8510-	HJ60			87245-90A19-	1	567	
		87248C | PIPE, HEATER WATER INLET, C						
	8008-8110	BJ60			87248-90A12-	1	455	458
	8110-8411	BJ60			87248-90A17-	1	459	514
	8411-8510	BJ60			87248-90K19-	1	515	566
	8008-	FJ60			87248-90A08-	1	455	
		87248D | PIPE, HEATER WATER INLET, D						
	8008-8210	BJ60			87248-90A15-	1	455	466
	8210-8411	BJ60			87248-90A21-	1	467	514
	8411-8510	BJ60			87248-90A23-	1	515	566
	8008-8504	FJ60			87248-90A09-	1	455	554
	8504-	HJ60,FJ60			87248-90A22-	1	555	
		87249B | PIPE, HEATER WATER OUTLET, B						
	8008-8411	BJ60			87248-60260-	1	455	514
	8411-8510	BJ60			87248-90K18-	1	515	566
	8008-	FJ60			87248-90A06-	1	455	
	8510-	HJ60			87248-90A16-	1	567	
		87249C | PIPE, HEATER WATER OUTLET, C						
	8008-8210	BJ60			87248-90A14-	1	455	466
	8210-8411	BJ60			87248-90A20-	1	467	514
	8411-8510	BJ60			87248-90A26-	1	515	566
	8008-8210	FJ60			87248-90A07-	1	455	466
	8210-8504	FJ60			87248-90A18-	1	467	554
	8510-	HJ60••ATM			87248-90A27-	1	567	

	PROD.DATE	MODELS	DESCRIPTION	R/P	PART NUMBER	QTY	REV.REF.CODE FROM	REV.REF.CODE UP TO
		87249C | PIPE, HEATER WATER OUTLET, C CONTINUED						
	8504-	HJ60,FJ60 •MTM			87248-90A25-	1	555	
		87249D | PIPE, HEATER WATER OUTLET, D						
	8411-8504	BJ60			87248-90A24-	1	515	554
	8008-8210	BJ60,FJ60			87248-90A10-	1	455	466
	8210-8411	BJ60,FJ60			87248-90A19-	1	467	514
	8504-	BJ60,HJ60,FJ60			87248-90A24-	1	555	
	8411-8504	FJ60			87248-90A19-	1	515	554
		87251 | JOINT OR UNION, HEATER HOSE THROUGH						
	8008-8411	BJ60	W/F R,R		87251-29020-	1	455	514
	8008-8510	BJ60	LH		87251-30200-	1	455	566
	8411-8510	BJ60	W/RR HEATER,RH		87251-90K00-	1	515	566
	8510-	HJ60			87251-30200-	1	567	
		87255A | HOSE, REAR HEATER WATER INLET, A (FROM ENGINE)						
	8008-8110	BJ60			87245-90A16-	1	455	458
	8110-8411	BJ60			87245-90A20-	1	459	514
	8411-8510	BJ60	L=55		99556-20055-	1	515	566
	8008-8101	FJ60	*H,L=160		99552-20200-	1	455	
	8101-8309	FJ60	*H,L=150			1		
	8309-8[illegible]	FJ60	L=150		99556-20150-	1		572
	860[illegible]-	FJ60			87245-90A49-	1	573	
		87255B | HOSE, REAR HEATER WATER INLET, B						
	8008-8210	BJ60			87245-90A15-	1	455	466
	8210-8411	BJ60			87245-90A23-	1	467	514
	8411-8510	BJ60			87245-90A31-	1	515	566
	8008-	FJ60			87245-90A04-	1	455	
	8510-	HJ60			87245-90A24-	1	567	
		87255E | HOSE, REAR HEATER WATER INLET, E (TO HEATER UNIT)						
	8008-	BJ60,FJ60			87245-90A05-	1	455	

* H, L = Cut hose to length as specified in remarks

	PROD.DATE	MODELS	DESCRIPTION	R/P	PART NUMBER	QTY	REV.REF.CODE FROM	REV.REF.CODE UP TO
		87255E HOSE, REAR HEATER WATER INLET, E (TO HEATER UNIT) CONTINUED						
	8510-	HJ60			87245-90A43-	1	567	
		87255G HOSE, REAR HEATER WATER INLET, G						
	8510-	HJ60			87245-90A40-	1	567	
		87256A HOSE, REAR HEATER WATER OUTLET, A (FROM HEATER UNIT)						
	8008-	BJ60,FJ60			87245-90A05-	1	455	
	8510-	HJ60			87245-90A43-	1	567	
		87256B HOSE, REAR HEATER WATER OUTLET, B						
	8504-8510	BJ60	L=100		99556-20100-	1	555	566
	8008-8210	BJ60,FJ60	*H,L=120		99552-20200-	1	455	466
	8210-8309	BJ60,FJ60	L=100		99552-20100-	1	467	
	8309-8504	BJ60,FJ60	L=100		99556-20100-	1		554
C	8504-8508	FJ60	L=90		99556-20090-	1	555	
C	8508-	FJ60	L=100		99556-20100-	1		
	8510-	HJ60	L=95		99556-20095-	1	567	
		87256C HOSE, REAR HEATER WATER OUTLET, C						
	8008-8510	BJ60			87245-90A13-	1	455	566
	8008-8210	FJ60			87245-90A06-	1	455	466
	8210-8504	FJ60			87245-90A21-	1	467	554
	8504-	FJ60			87245-90A35-	1	555	
	8510-	HJ60..ATM			87245-90A34-	1	567	
	8510-	HJ60..MTM			87245-90A33-	1	567	
		87256E HOSE, REAR HEATER WATER OUTLET, E (TO ENGINE)						
	8008-8210	BJ60			87245-90A14-	1	455	466
	8210-8411	BJ60			87245-90A22-	1	467	514
	8411-8510	BJ60			87245-90A32-	1	515	566
	8008-8309	FJ60	*H,L=60		99552-30100-	1	455	
C	8309-8508	FJ60	L=60		99556-30060-	1		
C	8508-	HJ60,FJ60	*H,L=60		99556-30100-	1		

PROD.DATE	MODELS	DESCRIPTION	R/P	PART NUMBER	QTY	REV.REF.CODE FROM	REV.REF.CODE UP TO
	87256G HOSE, REAR HEATER WATER OUTLET, G						
8510-	HJ60			87245-90A41-	1	567	

* H, L = Cut hose to length as specified in remarks

FIG.87-17 HEATING & AIR CONDITIONING - VACUUM PIPING

4-C6

MR4-11-0495

(8008-)FJ60••USA; (8411-8510)BJ60

(8510-)HJ60

FJ60

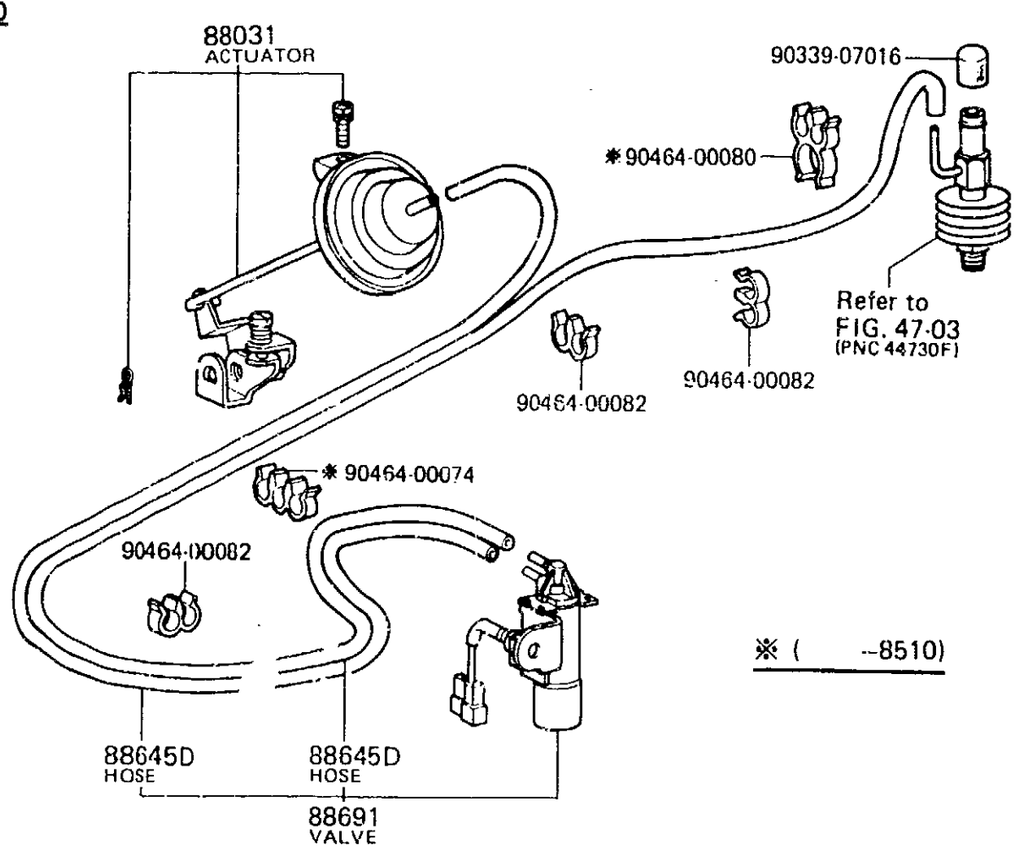

※ (--8510)

BJ60

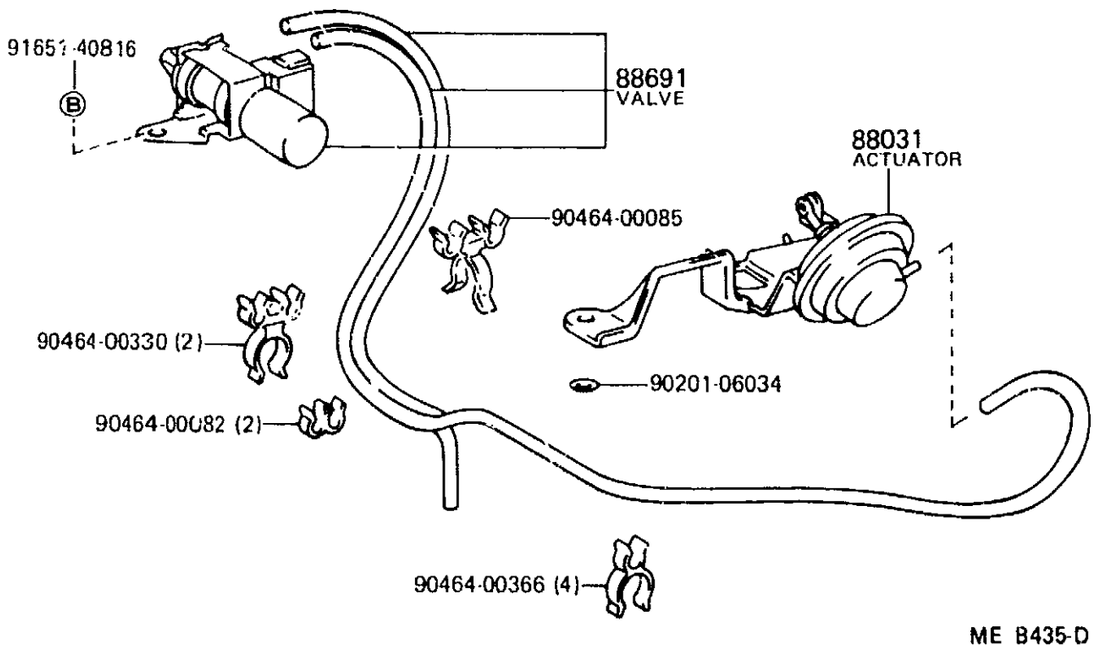

ME B435-D

HJ60

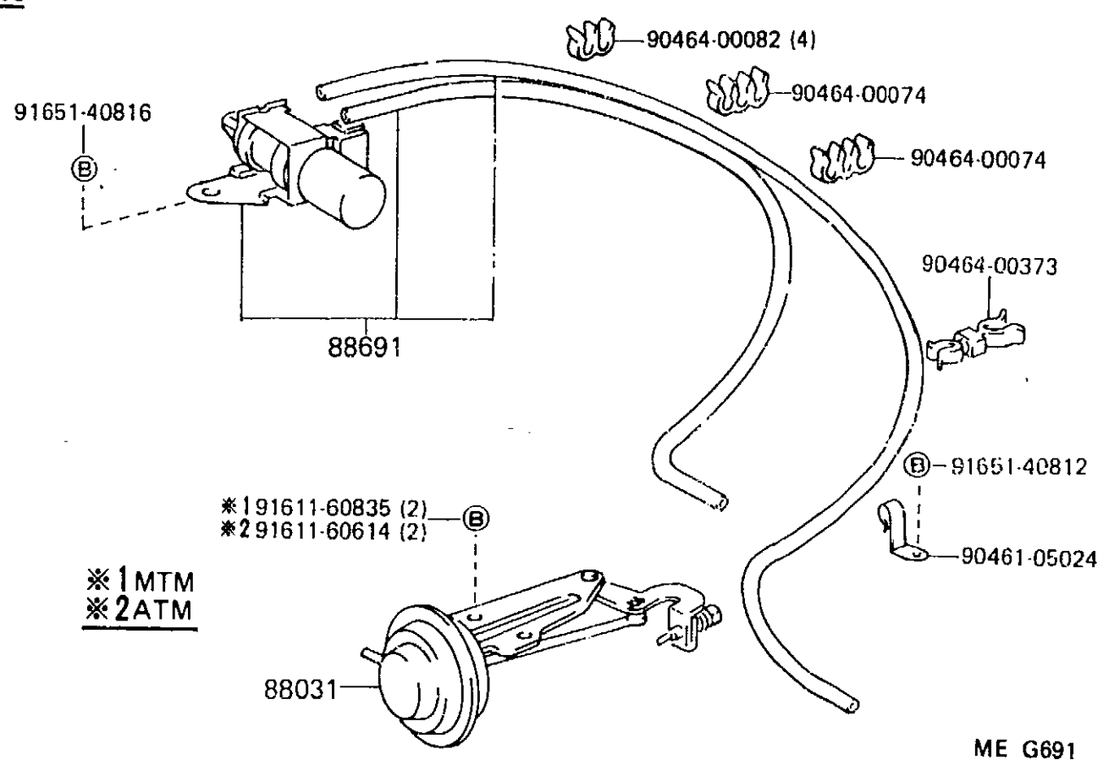

※1MTM
※2ATM

ME G691

PROD.DATE	MODELS	DESCRIPTION	R/P	PART NUMBER	QTY	REV.REF.CODE FROM	REV.REF.CODE UP TO
FIG.	87-17 HEATING & AIR CONDITIONING - VACUUM PIPING						
	88031 ACTUATOR SET, IDLE UP						
8411-8510	BJ60			88031-60040-	1	515	566
8008-8604	FJ60••USA			88031-60010-	1	455	572
8510-	HJ60••ATM			88031-60050-	1	567	
8510-	HJ60••MTM			88031-60030-	1	567	
	88645D HOSE (FOR IDLE UP DEVICE)						
8008-8504	FJ60••USA	*H,L=750		95411-10095-	1	455	554
8008-6504	FJ60••USA	*H,L=480		95411-19960-	1	455	554
	88691 VALVE, MAGNET (FOR IDLE UP DEVICE)						
8411-8510	BJ60			88690-90A02-	1	515	566
8504-	FJ60			88690-90A10-	1	555	
8008-8504	FJ60••USA			88690-90A00-	1	455	554
8510-	HJ60••ATM			88690-90A09-	1	567	
8510-	HJ60••MTM			88690-90A05-	1	567	
8510-	HJ60••MTM	W/*ELC		88690-90A09-	1	567	

PROD.DATE	MODELS	DESCRIPTION	R/P	PART NUMBER	QTY	REV.REF.CODE FROM	REV.REF.CODE UP TO

* H, L = Cut hose to length as specified in remarks
* ELC = Electric Control Transfer

FIG.87-18 HEATING & AIR CONDITIONING - COOLER PIPING

4-E6

(8008-8504)FJ60••USA

(8504-8604)FJ60

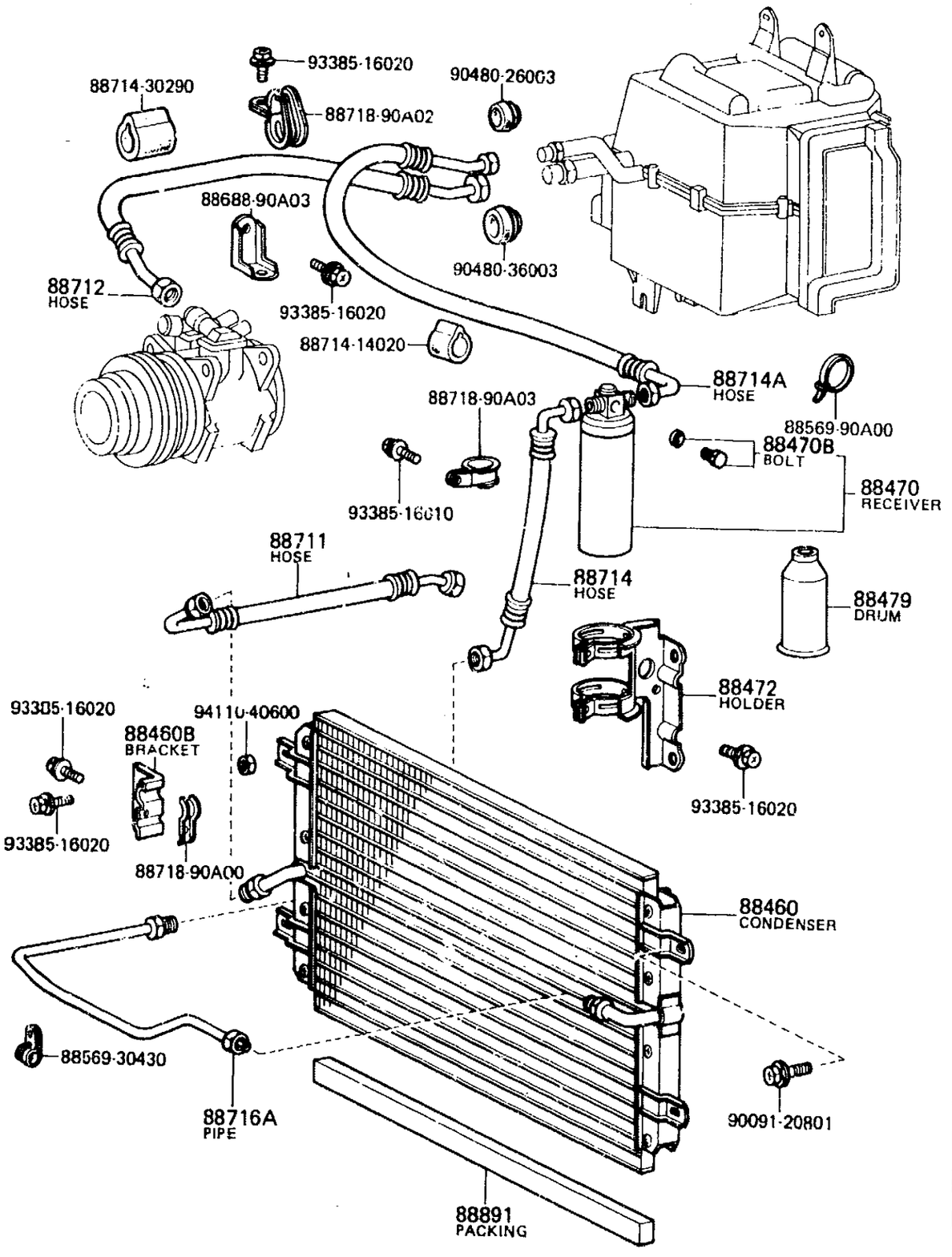

ME 9442-B

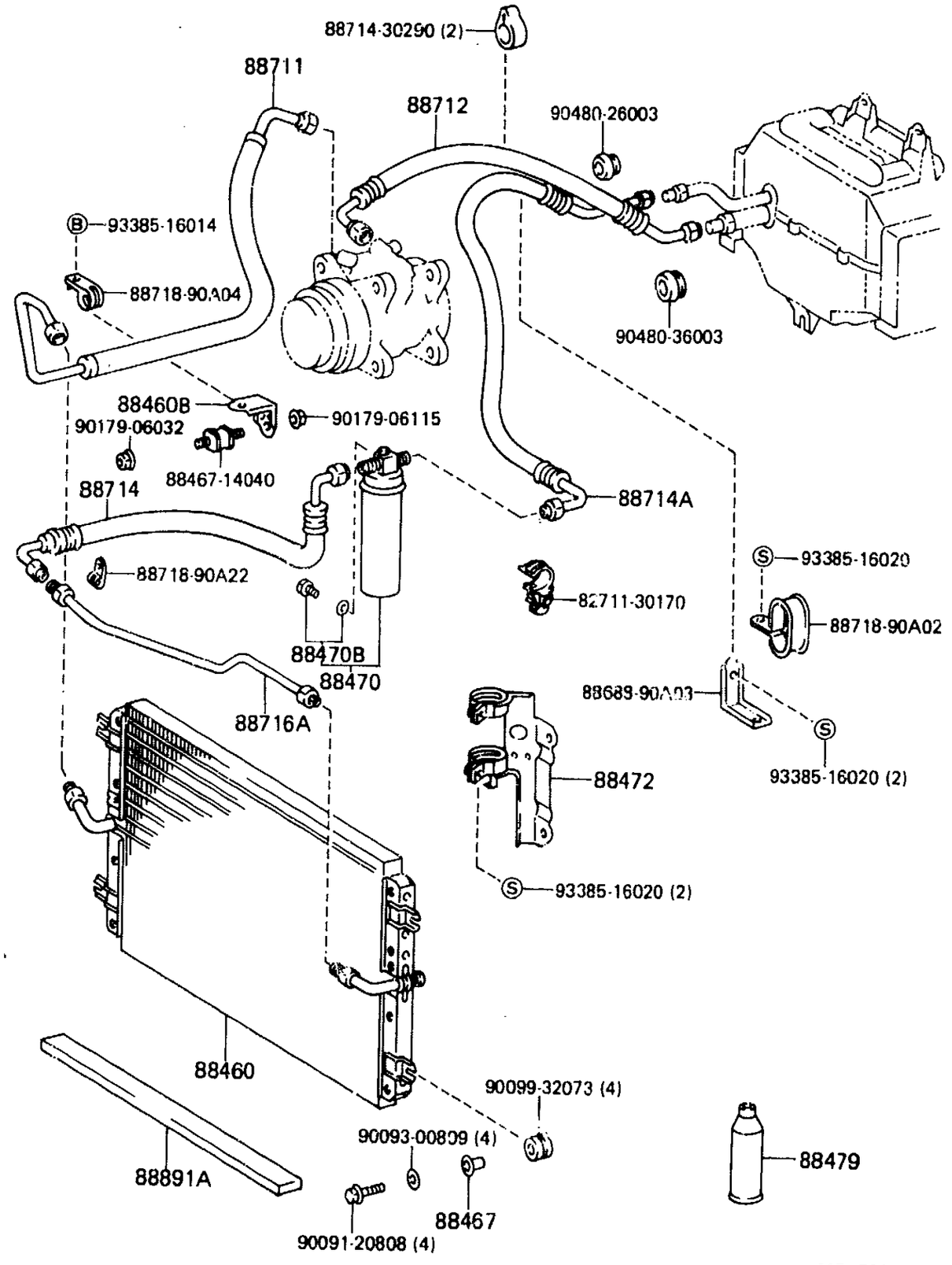

ME F827-A

FIG.87-18 HEATING & AIR CONDITIONING - COOLER PIPING

4-F6

(8604-)FJ60

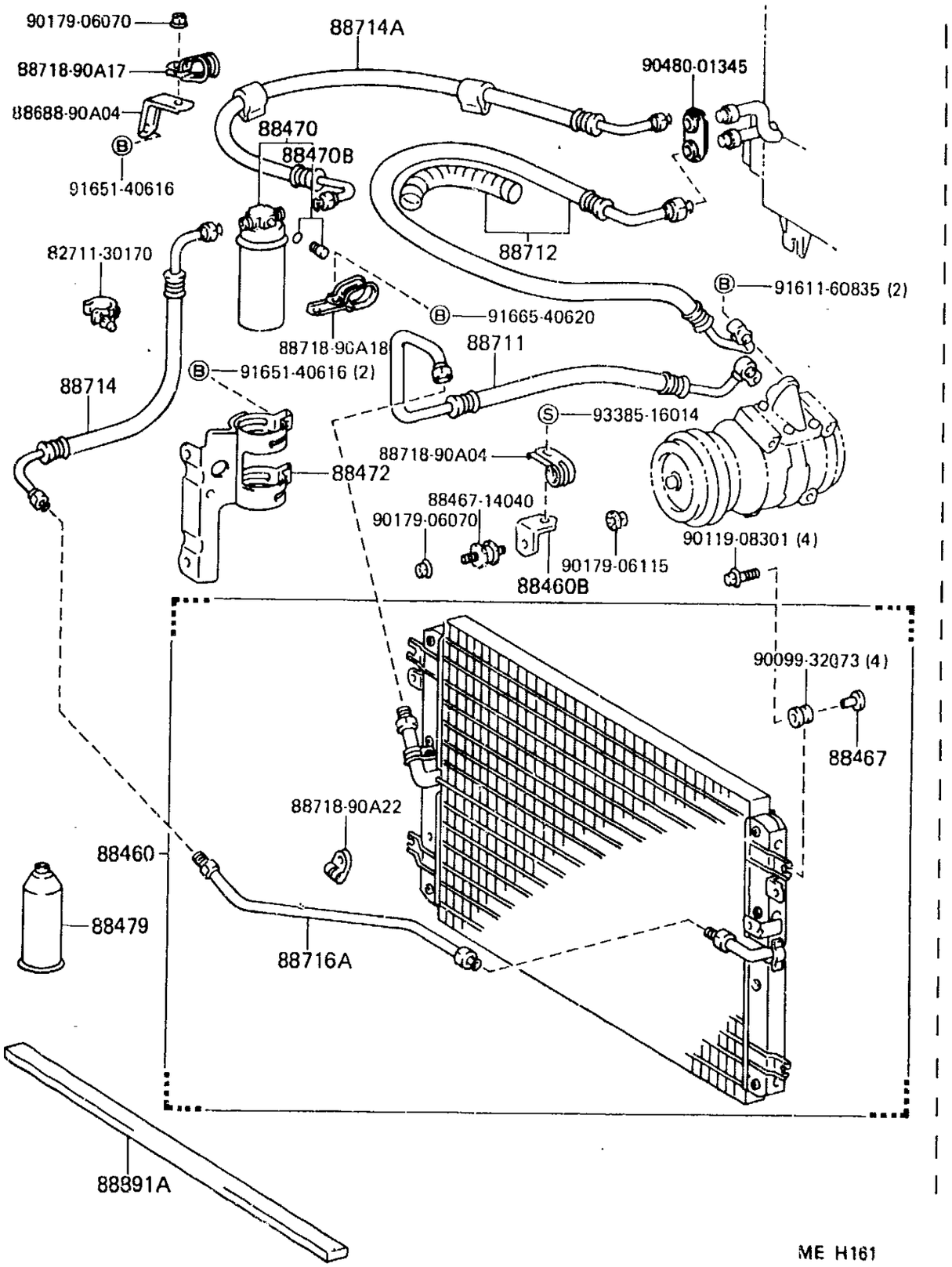

ME H161

(8411-8510)BJ60

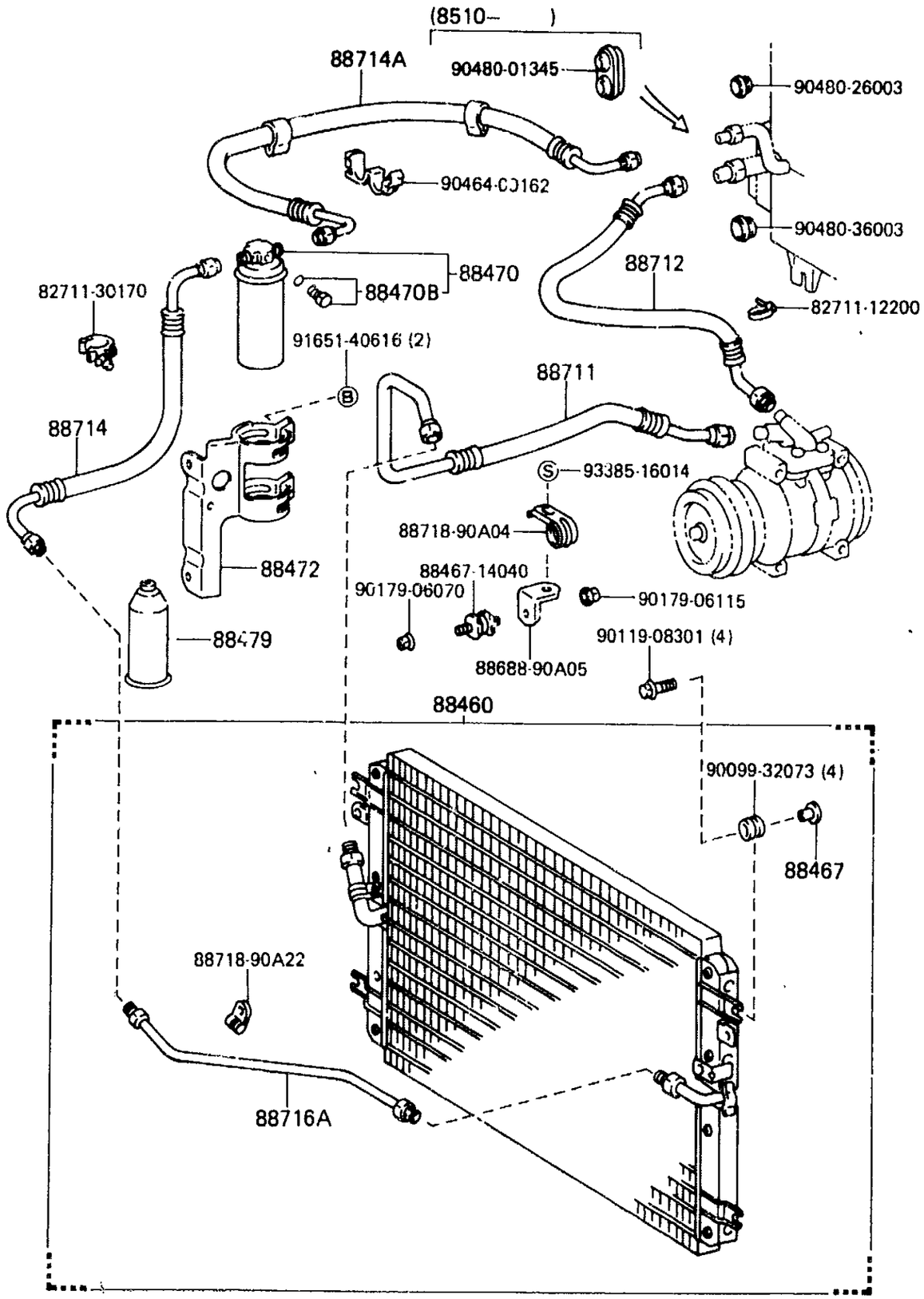

ME F460-B

FIG.87-18 HEATING & AIR CONDITIONING - COOLER PIPING

4-G6

(8510-)HJ60

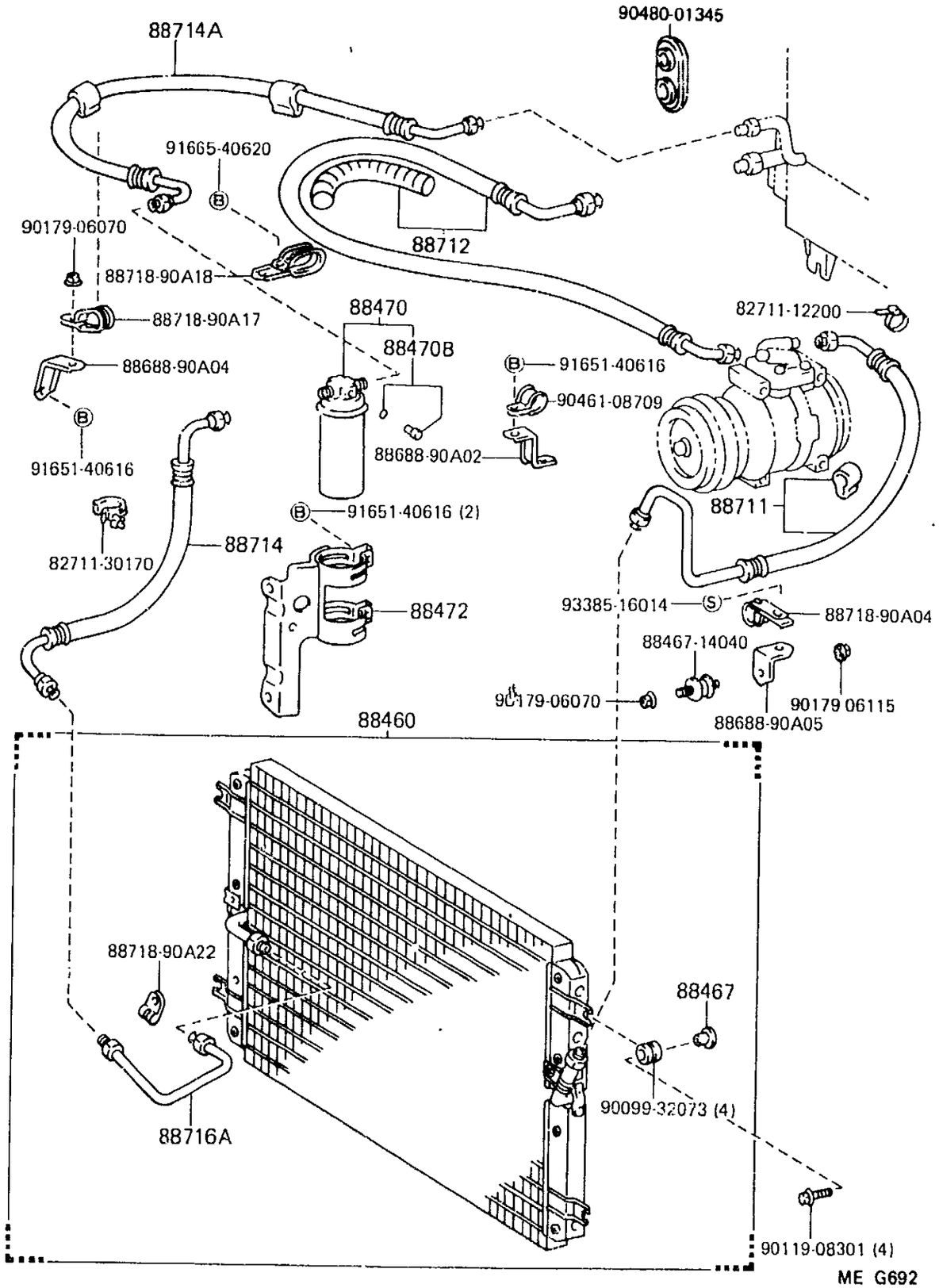

GENUINE TOYOTA PARTS

PROD.DATE	MODELS	DESCRIPTION	R/P	PART NUMBER	QTY	REV.REF.CODE FROM	REV.REF.CODE UP TO
FIG.	87-18 HEATING & AIR CONDITIONING - COOLER PIPING						
	88460	CONDENSER ASSY, COOLER					
8411-8510	BJ60			88460-90A08-	1	515	566
8504-8604	FJ60			88460-90A06-	1	555	572
8604-	FJ60			88460-90A04-	1	573	
8008-8504	FJ60..USA			88460-90A00-	1	455	554
8510-	HJ60			88460-90A09-	1	567	
	88460B	BRACKET, COOLER CONDENSER, NO.1					
8504-	FJ60			88688-90A05-	1	555	
8008-8504	FJ60..USA			88688-90A00-	1	455	554
	88467	CUSHION, COOLER CONDENSER, NO.1					
8411-	BJ60,HJ60			# 88467-22040- (88469-22010-)	4	515	
8504-	FJ60				4	555	
	88470	RECEIVER AND DRYER ASSY, COOLER					
8411-	BJ60,HJ60			88470-14010-	1	515	
8008-	FJ60..USA				1	455	
	88470B	BOLT, FUSE					
8411-	BJ60,HJ60			# 90099-04579- (88475-12020-)	1	515	
8008-	FJ60..USA				1	455	
	88472	BRACKET, RECEIVER TANK, NO.1					
8411-	BJ60,HJ60			88472-90A01-	1	515	
8008-	FJ60..USA				1	455	
	88479	FREON GAS, AIR CONDITIONER (DRUM, COOLER REFRIGERANT)					
8008-	FJ60..USA			90986-02001-	2	455	
	88711	HOSE, COOLER REFRIGERANT DISCHARGE, NO.1					
8411-8510	BJ60			88711-90A05-	1	515	566
8504-	FJ60			88711-90A07-	1	555	
8008-8504	FJ60..USA			88711-90A00-	1	455	554

PROD.DATE	MODELS	DESCRIPTION	R/P	PART NUMBER	QTY	REV.REF.CODE FROM	REV.REF.CODE UP TO
	88711 HOSE, COOLER REFRIGERANT DISCHARGE, NO.1 CONTINUED						
8510-	HJ60			88711-90A08-	1	567	
	88712 HOSE, COOLER REFRIGERANT SUCTION, NO.1						
8411-8510	BJ60			88712-90A11-	1	515	566
8604-	FJ60			88712-90A26-	1	573	
8008-8604	FJ60••USA			88712-90A01-	1	455	572
8510-	HJ60			88712-90A13-	1	567	
	88714 HOSE, COOLER REFRIGERANT RIQUID, NO.1						
8411-8504	BJ60			88721-90A07-	1	515	554
8504-	BJ60,HJ60,FJ60				1	555	
8008-8504	FJ60••USA			88721-90A02-	1	455	554
	88714A HOSE, COOLER REFRIGERANT RIQUID, NO.2						
8411-	BJ60,HJ60			88721-90A08-	1	515	
8008-	FJ60••USA			88721-90A03-	1	455	
	88716A PIPE, COOLER REFRIGERANT LIQUID, A (FROM CONDENSER)						
8411-8504	BJ60			88716-90A07-	1	515	554
8504-	BJ60,FJ60				1	555	
8008-8504	FJ60••USA			88716-90A01-	1	455	554
8510-	HJ60			88716-90A09-	1	567	
	88891A PACKING						
8604-	FJ60			88578-90A02-	1	573	
8008-8604	FJ60••USA			88578-90A01-	1	455	572

PROD.DATE	MODELS	DESCRIPTION	R/P	PART NUMBER	QTY	REV.REF.CODE FROM	REV.REF.CODE UP TO

FIG.87-19 HEATING & AIR CONDITIONING - COMPRESSOR

4-I6

(8008-)FJ60••USA; (8411-8510)BJ60

(8510-)HJ60

ILLUST.NO. 10F3

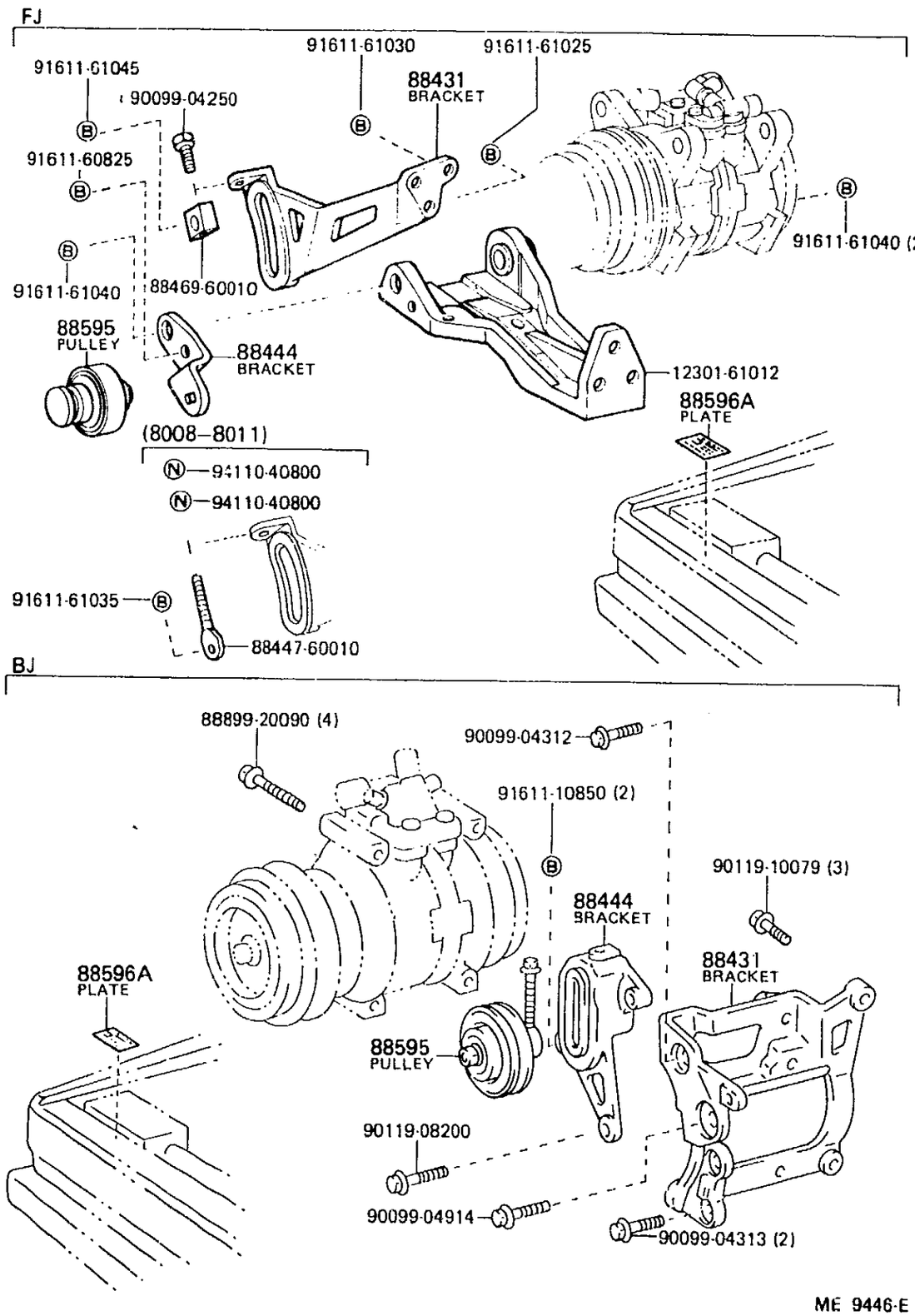

ME 9446-E

ILLUST.NO. 10F3

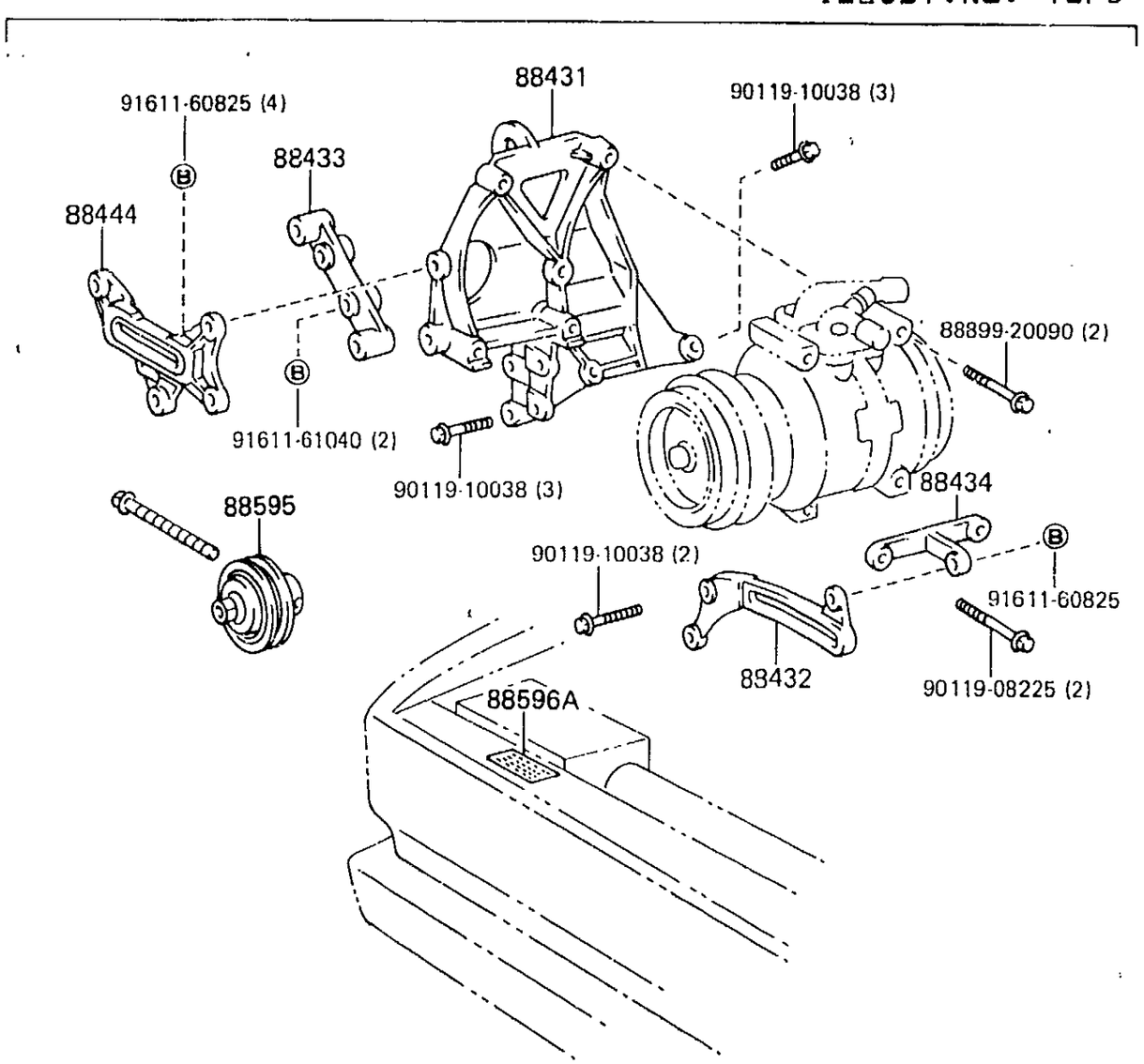

ME G693

FIG.87-19 HEATING & AIR CONDITIONING — COMPRESSOR

4-J6

MR4-11-0499

(8008–)FJ60..USA; (8411–8510)BJ60; (8510–) HJ60

(8008–)FJ60..USA

ILLUST.NO. 2OF3

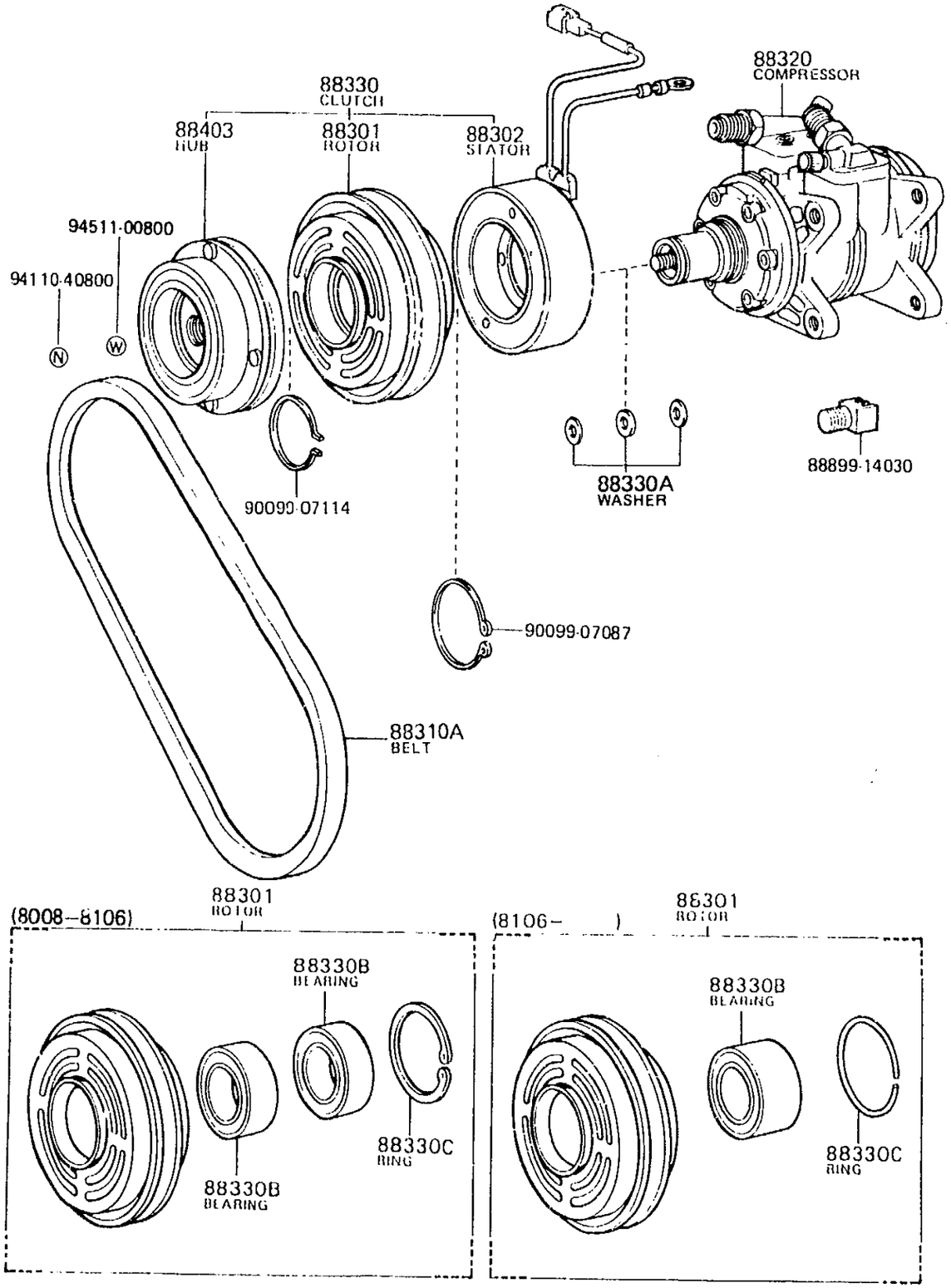

ME G694-B

ILLUST.NO. 3OF3

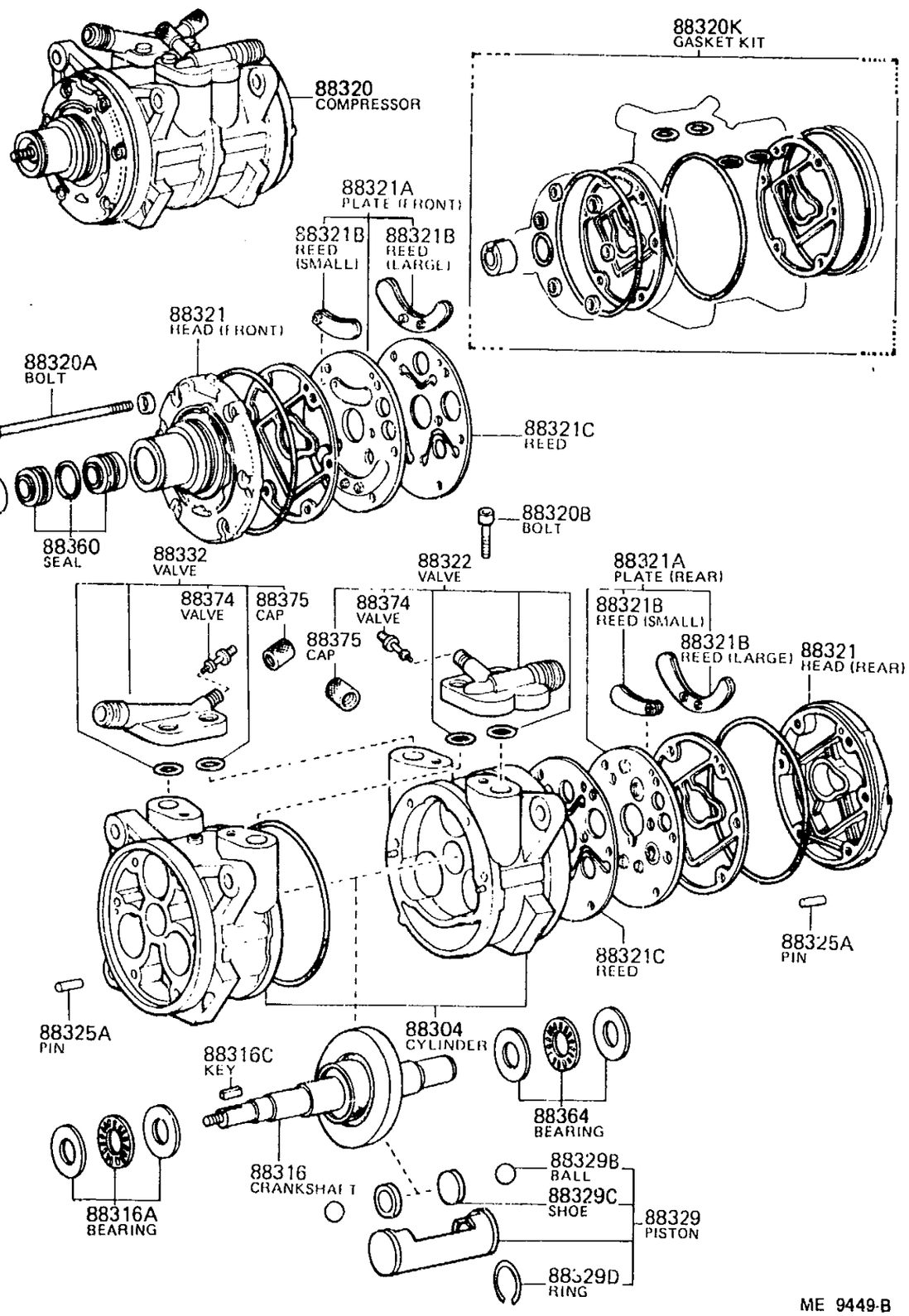

ME 9449-B

FIG.87-19 HEATING & AIR CONDITIONING - COMPRESSOR

4-K6

(8411-)BJ60,HJ60

ILLUST.NO. 30F3

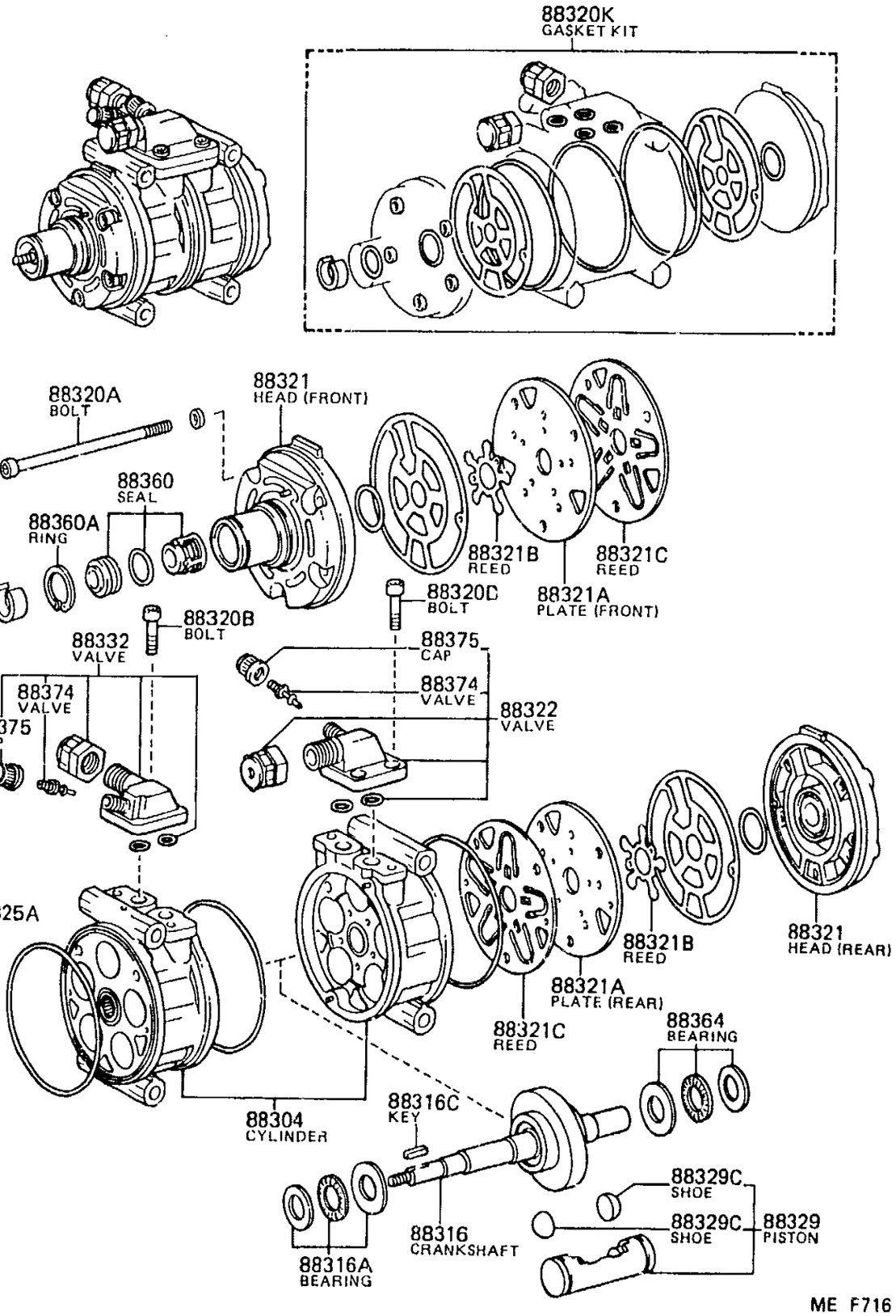

ME F716

GENUINE TOYOTA PARTS

PROD.DATE	MODELS	DESCRIPTION	R/P	PART NUMBER	QTY	REV.REF.CODE FROM	REV.REF.CODE UP TO
FIG.	87-19 HEATING & AIR CONDITIONING - COMPRESSOR						
	88301 ROTOR SUB-ASSY, MAGNET CLUTCH						
8411-	BJ60,HJ60			88412-22030-	1	515	
8008-8106	FJ60..USA			88412-12040-	1	455	
8106-	FJ60..USA			88412-14010-	1		
	88302 STATOR SUB-ASSY, MAGNET CLUTCH						
8411-8510	BJ60			88411-14050-	1	515	566
8008-8106	FJ60..USA		*	88411-22040- (88411-14040-)	1	455	
8106-	FJ60..USA			88411-14050-	1		
8510-	HJ60			88411-25020-	1	567	
	88304 CYLINDER SUB-ASSY, COOLER COMPRESSOR						
8411-	BJ60,HJ60			88304-14021-	1	515	
8008-	FJ60..USA			88304-14010-	1	455	
	88310A BELT, V (FOR COOLER COMPRESSOR TO CRANKSHAFT PULLEY)						
8411-8510	BJ60			99332-01030-	1	515	566
8604-	FJ60			99332-11260-	1	573	
8008-8604	FJ60..USA			99332-11250-	1	455	572
8510-	HJ60			99332-01395-	1	567	
	88316 CRANKSHAFT, COOLER COMPRESSOR						
8411-	BJ60,HJ60			88316-14011-	1	515	
8008-	FJ60..USA			88316-20070-	1	455	
	88316A BEARING, COMPRESSOR CRANKSHAFT, FRONT						
8411-	BJ60,HJ60			88366-14010-	1	515	
8008-	FJ60..USA			88366-20050-	1	455	
	88316C KEY, COMPRESSOR CRANKSHAFT						
8411-	BJ60,HJ60			90099-13012-	1	515	
8008-	FJ60..USA			90099-13011-	1	455	

PROD.DATE	MODELS	DESCRIPTION	R/P	PART NUMBER	QTY	REV.REF.CODE FROM	REV.REF.CODE UP TO
	88320 COMPRESSOR ASSY, COOLER						
8411-8510	BJ60			88320-60170-	1	515	566
8504-	FJ60			88320-60230-	1	555	
8008-8504	FJ60..USA			88320-60080-	1	455	554
8510-	HJ60			88320-60190-	1	567	
	88320A BOLT, THROUGH						
8411-	BJ60,HJ60			90099-04958-	5	515	
8008-	FJ60..USA			90099-04926-	6	455	
	88320B BOLT, SERVICE VALVE						
8411-	BJ60,HJ60			90099-04924-	4	515	
8504-	FJ60				4	555	
8008-8504	FJ60..USA			90099-04905-	4	455	554
	88320K GASKET KIT, COOLER COMPRESSOR OVERHAUL						
8411-	BJ60,HJ60			04881-10010-	1	515	
8008-	FJ60..USA			04881-14030-	1	455	
	88321 HEAD, COOLER COMPRESSOR CYLINDER						
8411-	BJ60,HJ60		FR	88321-14011-	1	515	
8411-	BJ60,HJ60		RR	88322-14011-	1	515	
8008-	FJ60..USA		FR	88321-20061-	1	455	
8008-	FJ60..USA		RR	88322-20040-	1	455	
	88321A PLATE SUB-ASSY, VALVE						
8411-	BJ60,HJ60		FR	88341-14010-	1	515	
8411-	BJ60,HJ60		RR	88342-14010-	1	515	
8008-	FJ60..USA		FR	88305-20070	1	455	
8008-	FJ60..USA		RR	88306-20040-	1	455	
	88321B REED SUB-ASSY, VALVE						
8411-	BJ60,HJ60			88344-14011-	2	515	
8008-8504	FJ60..USA		SMALL	88307-20050-	2	455	554
8008-8504	FJ60..USA		LARGE	88307-20060-	2	455	554

PROD.DATE	MODELS	DESCRIPTION	R/P	PART NUMBER	QTY	REV.REF.CODE FROM	REV.REF.CODE UP TO
	88321C REED, SUCTION VALVE						
8411-	BJ60,HJ60			88343-14011-	2	515	
8008-	FJ60..USA			88343-20040-	2	455	
	88322 VALVE, COOLER COMPRESSOR SUCTION SERVICE						
8411-8510	BJ60			88371-60110-	1	515	566
8008-	FJ60..USA			88371-60050-	1	455	
8510-	HJ60			88371-22120-	1	567	
	88325A PIN, CYLINDER BLOCK						
8411-	BJ60,HJ60			90099-08058-	4	515	
8008-	FJ60..USA				4	455	
	88329 PISTON SUB-ASSY, COOLER COMPRESSOR						
8411-	BJ60,HJ60			# 88301-14020- (88301-12050-)	5	515	
8008-	FJ60..USA			88301-20050-	3	455	
	88329B BALL, PISTON						
8008-	FJ60..USA			88312-30250-	6	455	
	88329C SHOE, PISTON						
8411-	BJ60,HJ60			88313-14010-	10	515	
8008-	FJ60..USA			88313-20070-	6	455	
	88329D RING, PISTON						
8008-8504	FJ60..USA			88317-20030-	6	455	554
	88330 CLUTCH ASSY, MAGNET						
8411-8510	BJ60			88410-22080-	1	515	566
8008-8106	FJ60..USA			# 88410-22060- (88410-14090-)	1	455	
8106-	FJ60..USA			88410-14090-	1		
8510-	HJ60			88410-60070-	1	567	
	88330A WASHER (FOR MAGNET CLUTCH)						
8504-	FJ60			88335-12050-	1	555	

	PROD.DATE	MODELS	DESCRIPTION	R/P	PART NUMBER	QTY	REV.REF.CODE FROM	REV.REF.CODE UP TO
		88330B BEARING, MAGNET CLUTCH						
	8411-	BJ60,HJ60			90099-10133-	1	515	
	8008-8106	FJ60..USA			# 90099-10117- (90099-10108-)	2	455	
	8106-	FJ60..USA			90099-10133-	1		
		88330C RING, SNAP (FOR MAGNET CLUTCH)						
	8411-	BJ60,HJ60			90099-07114-	1	515	
	8008-8106	FJ60..USA			90099-07094-	1	455	
	8106-	FJ60..USA			90099-07114-	1		
		88332 VALVE, COOLER COMPRESSOR DISCHARGE SERVICE						
	8411-8510	BJ60			88372-26060-	1	515	566
	8504-	FJ60			88372-22100-	1	555	
	8008-8504	FJ60..USA			88372-30320-	1	455	554
	8510-	HJ60			88372-60040-	1	567	
		88360 SEAL ASSY, COOLER COMPRESSOR SHAFT						
C	8411-8501	BJ60			88360-14020- (88360-40010-)	1	515	
C	8501-	BJ60,HJ60			88360-40010-	1		
	8504-	FJ60			88360-30280-	1	555	
	8008-8504	FJ60..USA			# 88360-30270- (88360-30280-)	1	455	554
		88360A RING, COMPRESSOR SEAL PLATE SNAP						
	8411-	BJ60,HJ60			90096-90022-	1	515	
		88364 BEARING, COMPRESSOR CRANKSHAFT, REAR						
	8411-	BJ60,HJ60			88366-14010-	1	515	
	8008-	FJ60..USA			88366-20050-	1	455	
		88374 VALVE, COOLER COMPRESSOR SERVICE						
	8411-	BJ60,HJ60			88374-12020-	2	515	
	8008-	FJ60..USA				2	455	
		88375 CAP, COOLER COMPRESSOR SERVICE VALVE						
	8411-	BJ60,HJ60			88375-30270-	2	515	
	8008-	FJ60..USA				2	455	

PROD.DATE	MODELS	DESCRIPTION	R/P	PART NUMBER	QTY	REV.REF.CODE FROM	REV.REF.CODE UP TO
	88403 HUB SUB-ASSY, MAGNET CLUTCH						
8411-	BJ60,HJ60			88403-14030-	1	515	
8008-8106	FJ60..USA			# 88403-26030- (88403-30270-)	1	455	
8106-	FJ60..USA			88403-14030-	1		
	88431 BRACKET, COMPRESSOR MOUNTING, NO.1						
8411-8510	BJ60			88431-36190-	1	515	566
8008-8011	FJ60..USA			88437-60100-	1	455	
8011-	FJ60..USA			88437-60170-	1		
8510-	HJ60			88431-60060-	1	567	
	88432 BRACKET, COMPRESSOR MOUNTING, NO.2						
8510-	HJ60			88437-60230-	1	567	
	88433 BRACKET, COMPRESSOR MOUNTING, NO.3						
8510-	HJ60			88437-60141-	1	567	
	88434 BRACKET, COMPRESSOR MOUNTING, NO.4						
8510-	HJ60			88437-60240-	1	567	
	88444 BRACKET, IDLE PULLEY						
8411-8510	BJ60			88444-36110-	1	515	566
8008-	FJ60..USA			88444-60020-	1	455	
8510-	HJ60			88444-60041-	1	567	
	88595 PULLEY, COOLER COMPRESSOR IDLE						
8411-8510	BJ60			88440-12160-	1	515	566
8008-	FJ60..USA			88440-20060-	1	455	
8510-	HJ60			88440-35010-	1	567	
	88596A PLATE, CAUTION						
8411-	BJ60,HJ60			88596-12010-	1	515	
8504-8510	FJ60				1	555	